T2

Walk- behind Scrubber

Parts Manual

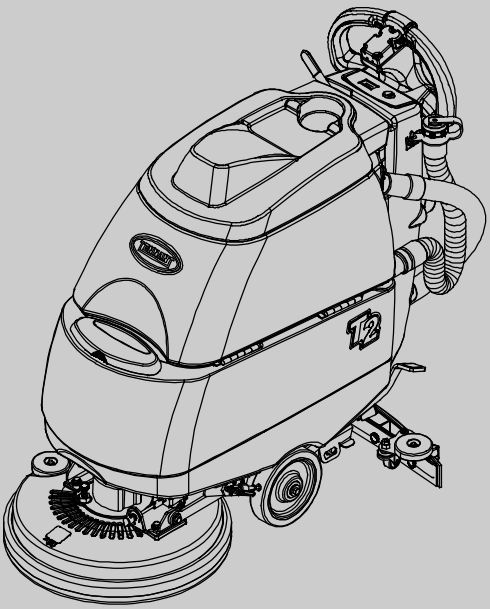

(S/N 00000000-)

Tennant*True*® Parts

North America

For the latest Parts manuals and other language Operator manuals, visit:

www.tennantco.com/manuals

9008845
Rev. 06 (07-2022)

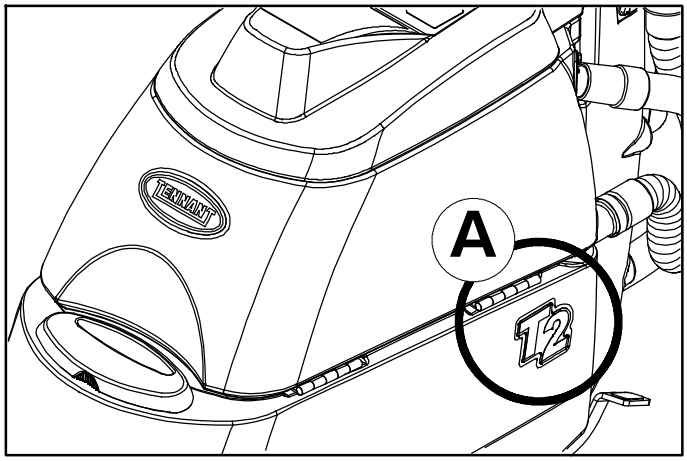

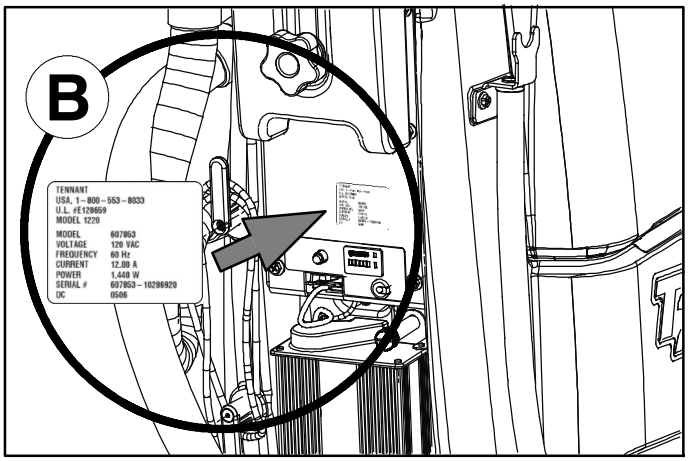

Ref	Part No.	Serial Number	Description	Qty.
1	82681	(000000-)	Bracket Wldt, Lpg Mount	1
▽ 2	63810	(000000-)	Latch Assy, Lpg Tank Mtg, W/Nut	4
▲ 3	51839	(000000-)	Nut Adjustable, Lpg Tank Mtg	2
4	49263	(000000-)	Tie, Cable	3
5	82556	(000000- 001039)	Bracket, Vaporizer	1
6	54930	(000000-)	Vaporizer, LPG	1

D

C

HOW TO ORDER PARTS - See diagram above

Only use TENNANT Company supplied or equivalent parts. Parts and supplies may be ordered online, by phone, by fax or by mail.

Follow the steps below to ensure prompt delivery.

1. **(A)** Identify the machine model.
2. **(B)** Identify the machine serial number from the data label.
3. **(C)** Ensure the proper serial number is used from the parts list.
4. Identify the part number and quantity. Do not order by page or reference numbers.
5. Provide your name, company name, customer ID number, billing and shipping address, phone number and purchase order number.
6. Provide detail shipping instructions.

(D) ▽ - identifies an assembly
▲ - identifies parts included in assembly

Please fill out at time of installation for future reference.

Model No. - _____

Serial No. - _____

Machine Options - _____

Sales Rep. - _____

Sales Rep. phone no. - _____

Customer ID Number - _____

Installation Date - _____

Tennant Company
10400 Clean Street
Eden Prairie, MN 55440
Phone: (800) 553- 8033
www.tennantco.com

Specifications and parts are subject to change without notice.

Copyright © 2011 - 2022 TENNANT Company, Printed in U.S.A.

STANDARD PARTS

GENERAL RECOMMENDED MAINTENANCE ITEMS 5
REPLACEMENT BRUSHES AND PAD DRIVER GROUP 6
RECOVERY TANK GROUP 8
SOLUTION TANK GROUP 10
VACUUM FAN GROUP 12
HANDLE GROUP 14
CONTROL PANEL GROUP (S/N 10675132-) 16
CONTROL PANEL GROUP (S/N 00000000- 10675131) 18
WHEEL GROUP (S/N 10728234-) 20
WHEEL GROUP (S/N 00000000- 10728233) 22
SCRUB HEAD GROUP, 43 CM (S/N 10572326-) 24
SCRUB HEAD GROUP, 43 CM (S/N 00000000- 10572325) 26
SCRUB HEAD LIFT GROUP 28
SQUEEGEE GROUP 30
SQUEEGEE LIFT GROUP 32
SOLUTION GROUP 34
ON- BOARD BATTERY CHARGER GROUP 36
BATTERY GROUP, WET 12V/105Ah 38
BATTERY GROUP, GEL 12V/102Ah 39
ELECTRICAL DIAGRAM 40
WIRING HARNESS 41

OPTIONS

PARKING BRAKE GROUP 44
DOCUMENTATION GROUP 46

GENERAL RECOMMENDED MAINTENANCE ITEMS

	Part No.	Serial Number	Description	Qty.
	1016763	(00000000-)	Brush Assy, Disk, Scb, 17.0d, Abr (Gray - Abrasive)	1
	1016764	(00000000-)	Brush Assy, Disk, Scb, 17.0d, Nyl (White - Nylon)	1
	1016765	(00000000-)	Brush Assy, Disk, Scb, 17.0d, Pyp (Black - Polypropylene)	1
	1243350	(00000000-)	Pad, Polish, 17.0d, White [1pick=1ctn] (5 Pads per Carton)	1
	1243349	(00000000-)	Pad, Buff, 17.0d, Red [1pick=1ctn] (5 Pads per Carton)	1
	1243348	(00000000-)	Pad, Scb, 17.0d, Blu [1pick=1ctn] (5 Pads per Carton)	1
	1243664	(00000000-)	Pad, Strip, 17.0d Brown [1pick=1ctn] (5 Pads per Carton)	1
	1243663	(00000000-)	Pad, Strip, 17.0d Blk[Hi Prod1pick=1ctn] (5 Pads per Carton)	1
	1243669	(00000000-)	Pad, Surf Prep, 17.0d Maroon[1pick=1ctn] (5 Pads per Carton)	1
	1240391	(00000000-)	Pad, Polish, 17.0d, Yel [1pick=1ctn] (5 Pads per Carton)	1
	1022797	(00000000-)	Seal, Bulb, Str, .295grv, 66.93l	1
	1036757	(00000000-)	Tray, Debris	1
∇	1042346	(00000000-)	Hose Assy, Drain, 1.50id X 22.5l, Blk	1
▲∇	1008639	(00000000-)	Cap, Drain Assy	1
▲▲	1019563	(00000000-)	Strap, Cap, Drain	1
▲▲	1008637	(00000000-)	Seal, Org, 1.48id 1.76od	1
	1045506	(00000000-)	Seal, Bulb, 90, 0.49d .08- .09grip 004.9l	2
	1045189	(00000000-)	Strainer, Fill	1
	630052	(00000000-)	Float, Shut- Off, (2)Ball, 1.75d	1
	1013628	(00000000-)	Gasket, Mtg, Float, .125th, Neo, Adh	1
	1037106	(00000000-)	Gasket, Adapter, Hose .13, Neo	1
	372883	(00000000-)	Vr, Brush Kit, Motor, Ele (1Pkg = 2Pc)	1
	100038	(00000000-)	Gasket, .50, 02.63id 05.75od, Adh [Epdm]	1
∇	1011402	(00000000-)	Switch, Key	1
▲	1017696	(00000000-)	Key Set, Replmt [F/ Keyswitch 1011402]	1
	606780	(00000000-)	Circuitbreaker, 30.0a, Resetable	1
	1043250	(00000000-)	Caster, Swivel, Plate, 70d X 40w X 95h	2
	1040129	(00000000-)	Wheel, 07.0d 1.50w, Pyu, Gray	2
	1045790	(10572326-)	Brush Kit, Replmt,Carbon 24vdc[1pk=1set] (For Motor 1062544, 1235389 & 1249809)	1
	222615	(00000000- 10572325)	Vr, Brush, Motor, Ele [lp 572012] (1Pkg = 1Pc) (For Motor 1028301)	4
	1014283	(00000000-)	Pad, Adh, 28mm X 36mm, Blk [Non- Slip]	1
∇	9004851	(00000000-)	Squeegee Assy Kit [T2]	1
▲	1010560	(00000000-)	Wheel, Bmpr, 80d X 25w, Non- Marking	2
▲	630477	(00000000-)	Wheel, Pyu, 02.0d 0.38w, Gray	1
▲	1045384	(00000000-)	Blade, Sqge, Rear, 27.84l Ure (Standard)	1
	1045383	(00000000-)	Blade, Sqge, Rear, 27.84l Gum (Optional)	1
	1040626	(00000000-)	Blade, Sqge, Rear, 27.84l Linatex (Optional)	1
▲	1045381	(00000000-)	Blade, Sqge, Front, 26.93l Ure (Standard)	1
	1045380	(00000000-)	Blade, Sqge, Front, 26.93l Gum (Optional)	1
	1040983	(00000000-)	Blade, Sqge, Front, 26.93l Linatex (Optional)	1
	1014079	(00000000-)	Clip, Grip, Hose, 1.50id, Dbl, Blk Pyp	1
	1042313	(00000000-)	Hose, Vacuum, 1.50id X 049.6l, 2cuff	1
	610906	(00000000-)	Hook, Cord [Viper]	2

REPLACEMENT BRUSHES AND PAD DRIVER GROUP

355102

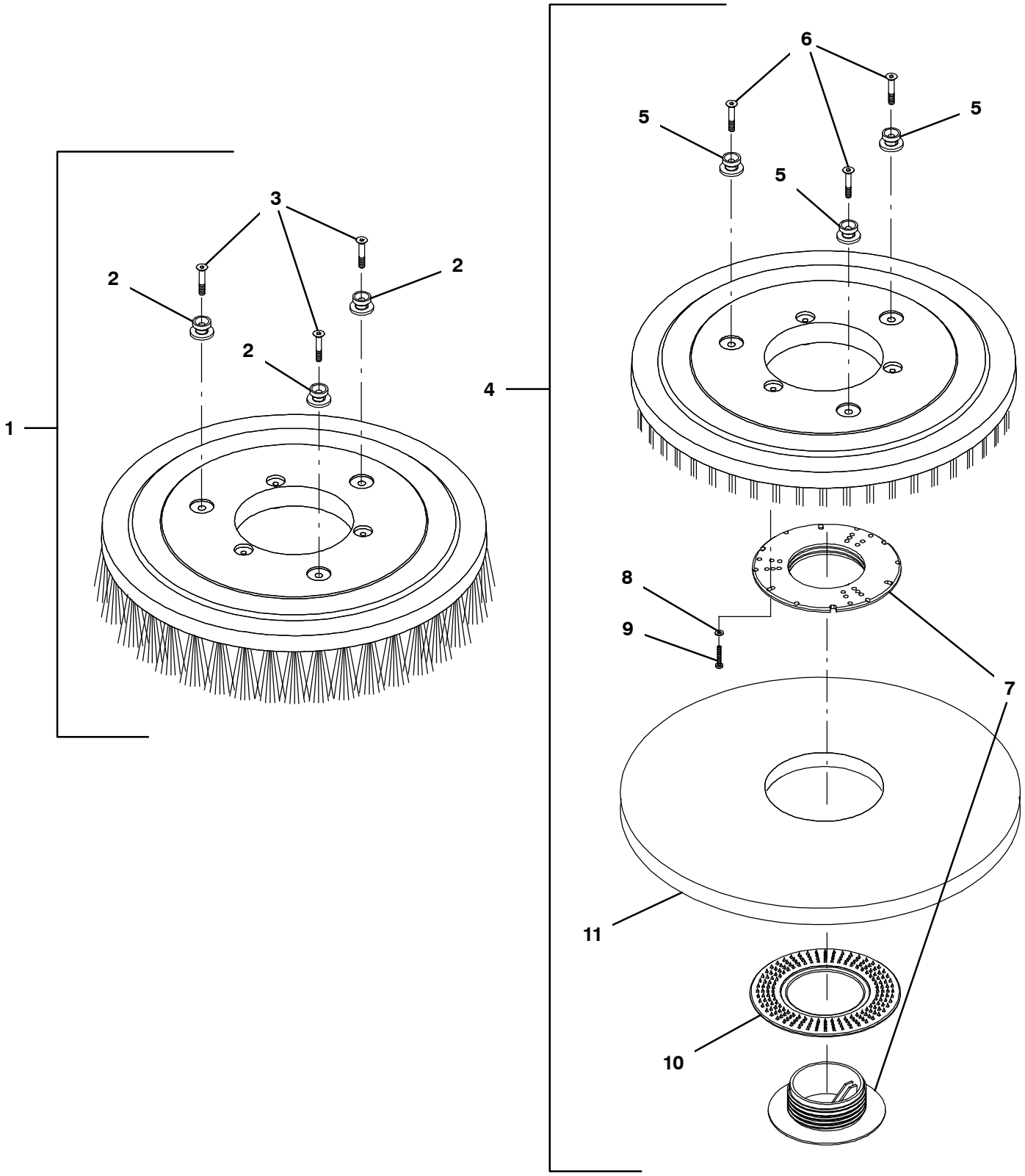

REPLACEMENT BRUSHES AND PAD DRIVER GROUP

	Ref.	Part No.	Serial Number	Description	Qty.
∇	1	1016763	(00000000-)	Brush Assy, Disk, Scb, 17.0d, Abr (Gray - Abrasive)	1
∇	1	1016764	(00000000-)	Brush Assy, Disk, Scb, 17.0d, Nyl (White - Nylon)	1
∇	1	1016765	(00000000-)	Brush Assy, Disk, Scb, 17.0d, Pyp (Black - Polypropylene)	1
▲	2	1013018	(00000000-)	Stud, Drive, Brush Pad	3
▲	3	1021316	(00000000-)	Screw, Flt, Phl, M6 X 1.00 X 35, Ss	3
∇	4	1016813	(00000000-)	Driver Assy, Pad, 17.0d, Brush	1
▲	5	1013018	(00000000-)	Stud, Drive, Brush Pad	3
▲	6	1021316	(00000000-)	Screw, Flt, Phl, M6 X 1.00 X 35, Ss	3
▲	7	32506	(00000000-)	Device, Centering, Rh Pad Retainer	1
▲	8	41579	(00000000-)	Washer, Flat, 08, Ss	3
▲	9	04403	(00000000-)	Screw, Pan, Phl, M4 X 0.70 X 25, Nl, Ss	3
▲	10	32505	(00000000-)	Washer, Flat, 92b 156d 2.6l, Pad Driver	1
	11	1243350	(00000000-)	Pad, Polish, 17.0d, White [1pick=1ctn] (5 Pads per Carton)	1
	11	1243349	(00000000-)	Pad, Buff, 17.0d, Red [1pick=1ctn] (5 Pads per Carton)	1
	11	1243348	(00000000-)	Pad, Scb, 17.0d, Blu [1pick=1ctn] (5 Pads per Carton)	1
	11	1243664	(00000000-)	Pad, Strip, 17.0d Brown [1pick=1ctn] (5 Pads per Carton)	1
	11	1243663	(00000000-)	Pad, Strip, 17.0d Blk[Hi Prod1pick=1ctn] (5 Pads per Carton)	1
	11	1243669	(00000000-)	Pad, Surf Prep, 17.0d Maroon[1pick=1ctn] (5 Pads per Carton)	1
	11	1240391	(00000000-)	Pad, Polish, 17.0d, Yel [1pick=1ctn] (5 Pads per Carton)	1

∇ ASSEMBLY

▲ INCLUDED IN ASSEMBLY

RECOVERY TANK GROUP

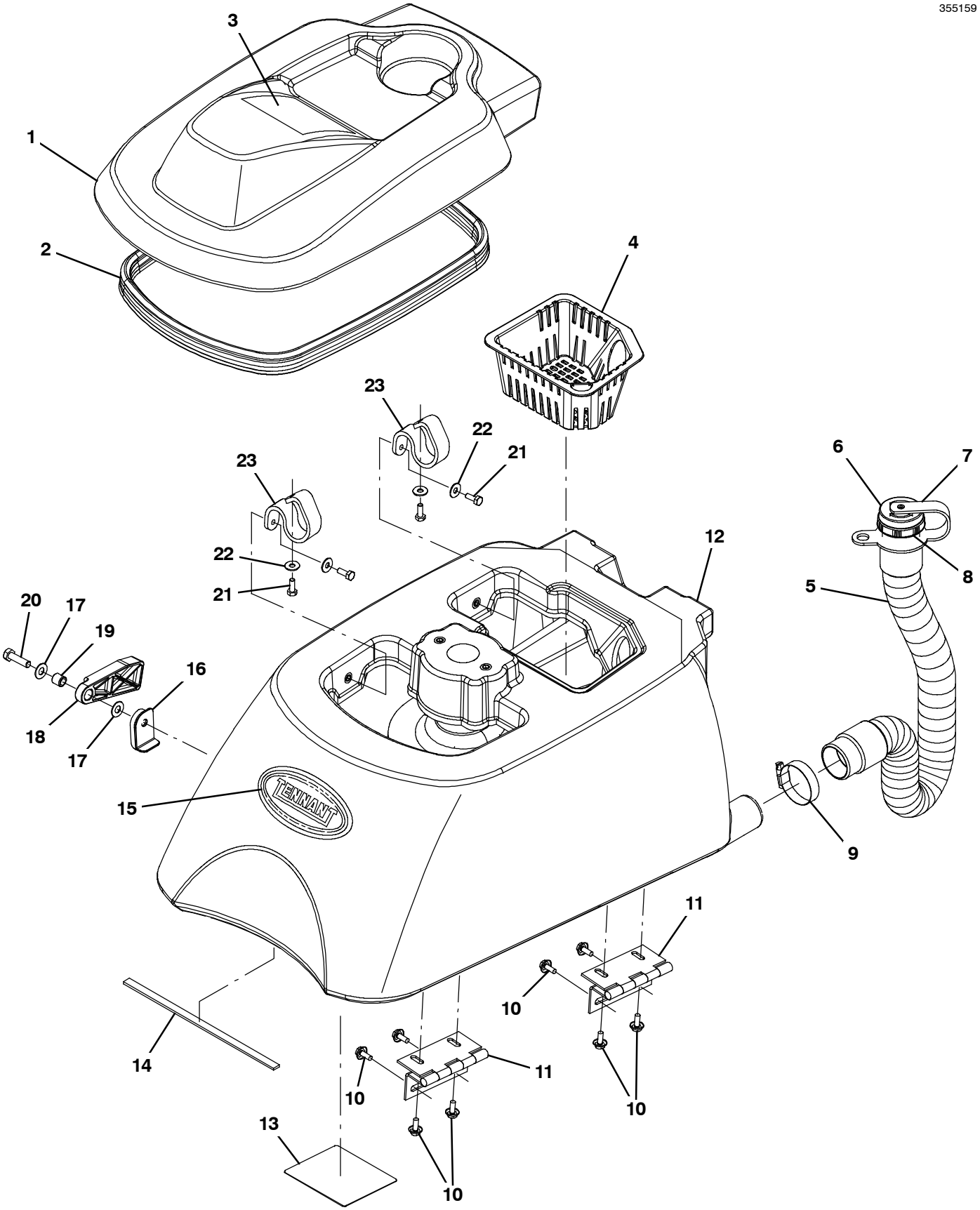

RECOVERY TANK GROUP

	Ref.	Part No.	Serial Number	Description	Qty.
∇	1	9009222	(00000000-)	Tank Kit, Rec Lid W/ Labels, Na [T2]	1
▲	2	1022797	(00000000-)	Seal, Bulb, Str, .295grv, 66.93l	1
▲	3	1026387	(00000000-)	Label, Warning [Dc Scr/Ext/Brn En/Fr/Es]	1
	4	1036757	(00000000-)	Tray, Debris	1
∇	5	1042346	(00000000-)	Hose Assy, Drain, 1.50id X 22.5l, Blk	1
▲∇	6	1008639	(00000000-)	Cap, Drain Assy	1
▲▲	7	1019563	(00000000-)	Strap, Cap, Drain (No Longer Available - Replaced By 1008639)	1
▲▲	8	1008637	(00000000-)	Seal, Org, 1.48id 1.76od	1
	9	11531	(00000000-)	Clamp, Hose, Wormdrive, 1.06- 2.00d, .56w	1
	10	1034731	(00000000-)	Screw, Hex, M6 X 1.00 X 16, Ss, Sems	8
	11	1012540	(00000000-)	Hinge, 6mm Pin 2.5 73.5mmw 100mml, Bent	2
∇	12	9004846	(00000000-)	Tank Kit, Recovery W/ Labels	1
▲	13	1042356	(00000000-)	Label, Instr, Battery [T2]	1
▲	14	222639	(00000000-)	Seal, Rbr, Clsd, .13, .38w 36.0l, Adh	1
▲	15	1039084	(00000000-)	Label, Logo, White, Tennant, 5.5”Lg	1
	16	1022904	(00000000-)	Bracket, Sppt, Stop, Blk, Nyl	1
	17	140027	(00000000-)	Washer, Flat, 0.35b 0.75d .04, Ss	2
	18	1022399	(00000000-)	Support, Tank, Prop, Blk, Nyl	1
	19	222460	(00000000-)	Sleeve, P/M, 0.31b 0.50d 0.5l [430ss]	1
	20	1039118	(00000000-)	Screw, Btn, M8 X 1.25 X 30, Blk	1
	21	11329	(00000000-)	Screw, Hex, M6 X 1.00 X 16, Nl, Ss	4
	22	01684	(00000000-)	Washer, Flat, 0.27b 0.69d .05, Ss	4
	23	1018946	(00000000-)	Strap, Retaining, 20mm X 159mm X 4.8,Blk	2

∇ ASSEMBLY

▲ INCLUDED IN ASSEMBLY

SOLUTION TANK GROUP

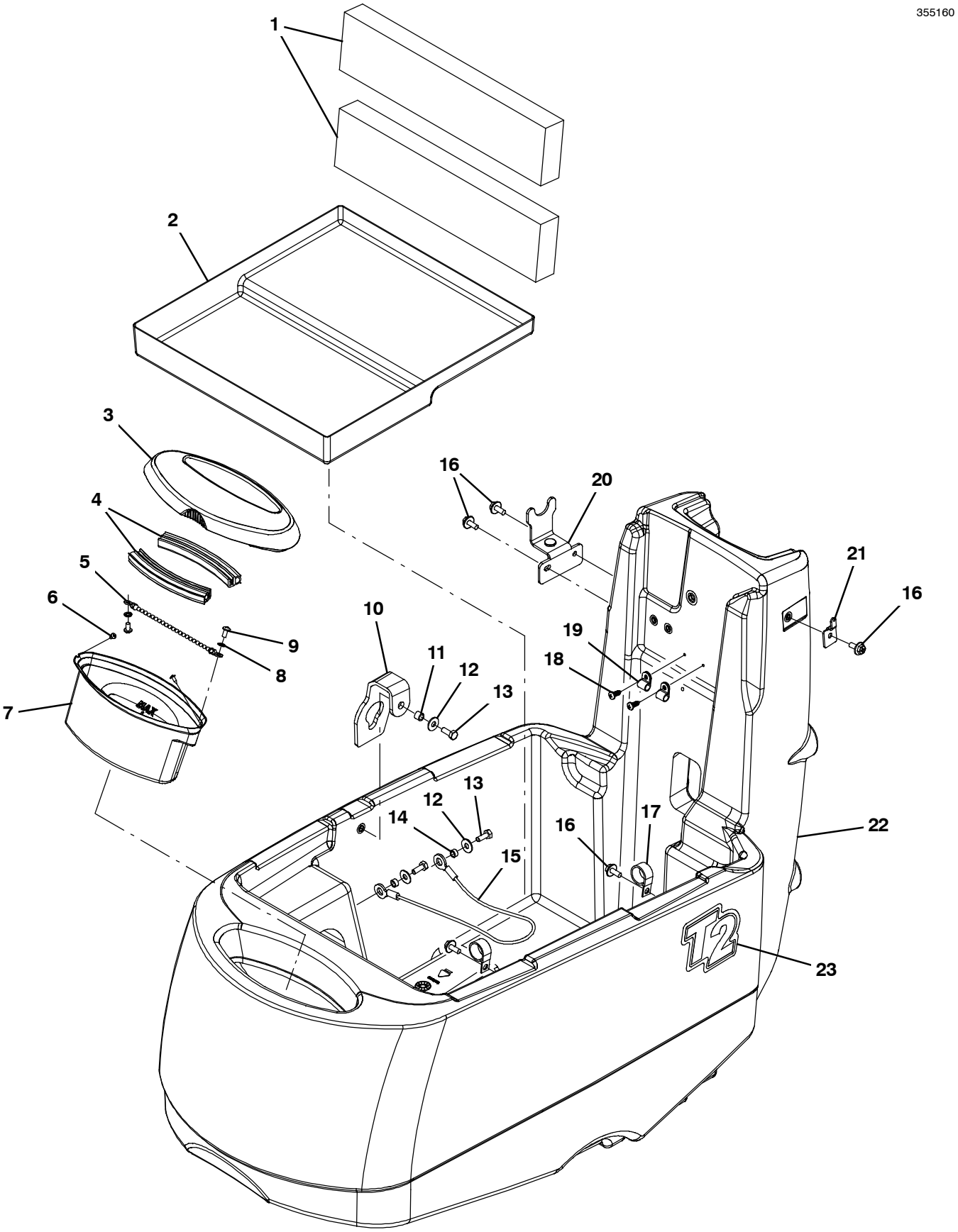

SOLUTION TANK GROUP

	Ref.	Part No.	Serial Number	Description	Qty.
	1	630375	(00000000-)	Spacer, Battery, 1.25 X 3.3 X 13.7, Foam	2
	2	1039967	(00000000-)	Tray, Battery	1
	3	1045309	(00000000-)	Cover, Fill, Front [T2]	1
	4	1045506	(00000000-)	Seal, Bulb, 90, 0.49d .08- .09grip 004.9l	2
	5	621443	(00000000-)	Chain, Ball, 10, 0157mml, Ss	1
	6	3701.6	(00000000-)	Screw, Pan, Phl, 06- 32 X 0.38, Shtmtl,Ss	2
	7	1045189	(00000000-)	Strainer, Fill	1
	8	07514	(00000000-)	Washer, Lock, Int, 10, Ss	2
	9	606915	(00000000-)	Screw, Pan, 10- 16 X 0.38, F/ Plstc, Ss	2
	10	1041789	(00000000-)	Strap, Hanger, Brush	1
	11	140134	(00000000-)	Sleeve, P/M, 0.25b 0.38d 0.3l, Stl	1
	12	01684	(00000000-)	Washer, Flat, 0.27b 0.69d .05, Ss	3
	13	11329	(00000000-)	Screw, Hex, M6 X 1.00 X 16, Nl, Ss	3
	14	1001553	(00000000-)	Bushing, Sleeve, 0.25b 0.36d 0.16l, Stl	2
	15	391368	(00000000-)	Cable, Glv .09d 016.5l .38eye /.38eye	1
	16	1034731	(00000000-)	Screw, Hex, M6 X 1.00 X 16, Ss, Sems	5
	17	630343	(00000000-)	Clamp, Cable, Stl, 0.88d X 0.50w, 1hole	2
	18	1018155	(00000000-)	Screw, Pan, Phl, M5 X 0.80 X 16, Tcut,Ss	2
	19	140324	(00000000-)	Clamp, Cable, Nyl, 0.31d, Blk	2
	20	1043670	(00000000-)	Bracket, Hanger, Sqge	1
	21	601460	(00000000-)	Clip, Hanger, Hose, .25d Hole, Clr Pl	1
∇	22	9004845	(00000000-)	Tank Kit, Solution W/ Labels [T2]	1
▲	23	1042354	(00000000-)	Label, Side T2	2

∇ ASSEMBLY

▲ INCLUDED IN ASSEMBLY

VACUUM FAN GROUP

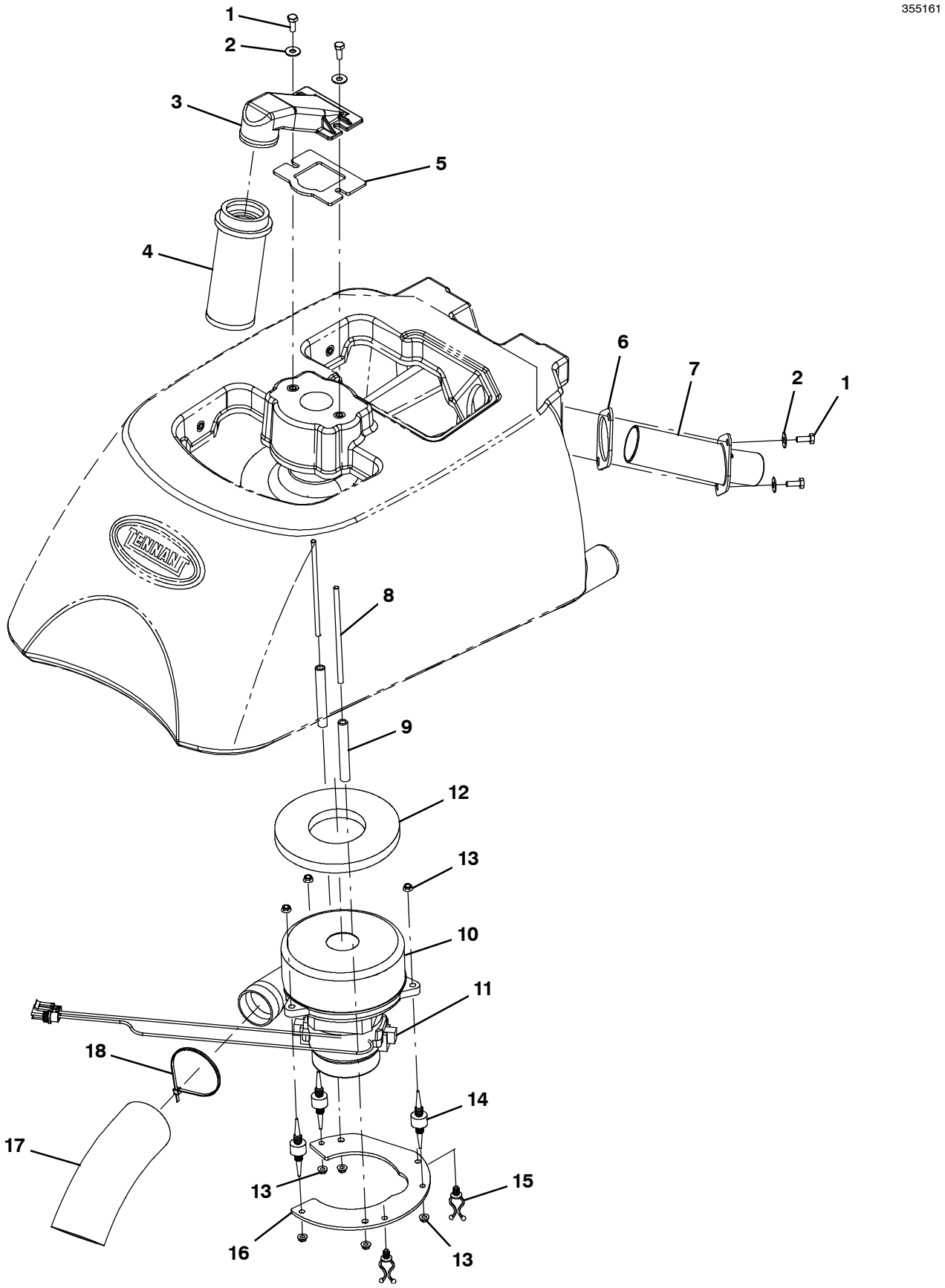

VACUUM FAN GROUP

	Ref.	Part No.	Serial Number	Description	Qty.
	1	11329	(00000000-)	Screw, Hex, M6 X 1.00 X 16, Nl, Ss	4
	2	01684	(00000000-)	Washer, Flat, 0.27b 0.69d .05, Ss	4
	3	1011777	(00000000-)	Mount, Float, Mold	1
	4	630052	(00000000-)	Float, Shut- Off, (2)Ball, 1.75d	1
	5	1013628	(00000000-)	Gasket, Mtg, Float, .125th, Neo, Adh	1
	6	1037106	(00000000-)	Gasket, Adapter, Hose .13, Neo	1
	7	1037064	(00000000-)	Tube, Hose, Adapter, 1.5d	1
	8	1015412	(00000000-)	Rod, Thrd, Full, M06 X 1.0 05.5l	2
	9	1024575	(00000000-)	Tube, 0.28id 0.43od 03.3l, Pl	2
∇	10	9008931	(00000000-)	Motor Kit, Vacuum, 24vdc, Afmkt	1
▲	11	372883	(00000000-)	Vr, Brush Kit, Motor, Ele (1Pkg = 2Pc)	1
▲	12	100038	(00000000-)	Gasket, .50, 02.63id 05.75od, Adh [Epdm]	1
	13	1040381	(00000000-)	Nut, Hex, Flng, M6 X 1.0, Ss [Serrated]	8
	14	1062016	(00000000-)	Isolator, Vib, .75d	3
	15	30406	(00000000-)	Clip, Keeper	2
	16	1041779	(00000000-)	Bracket, Mtg, Vacuum	1
	17	1068577	(00000000-)	Muffler, Exhaust, Vacfan, 150mml [T2/T3]	1
	18	130773	(00000000-)	Tie, Cable, Nyl, 11.0l, .14w, 3.0 Max. D	1

∇ ASSEMBLY

▲ INCLUDED IN ASSEMBLY

HANDLE GROUP

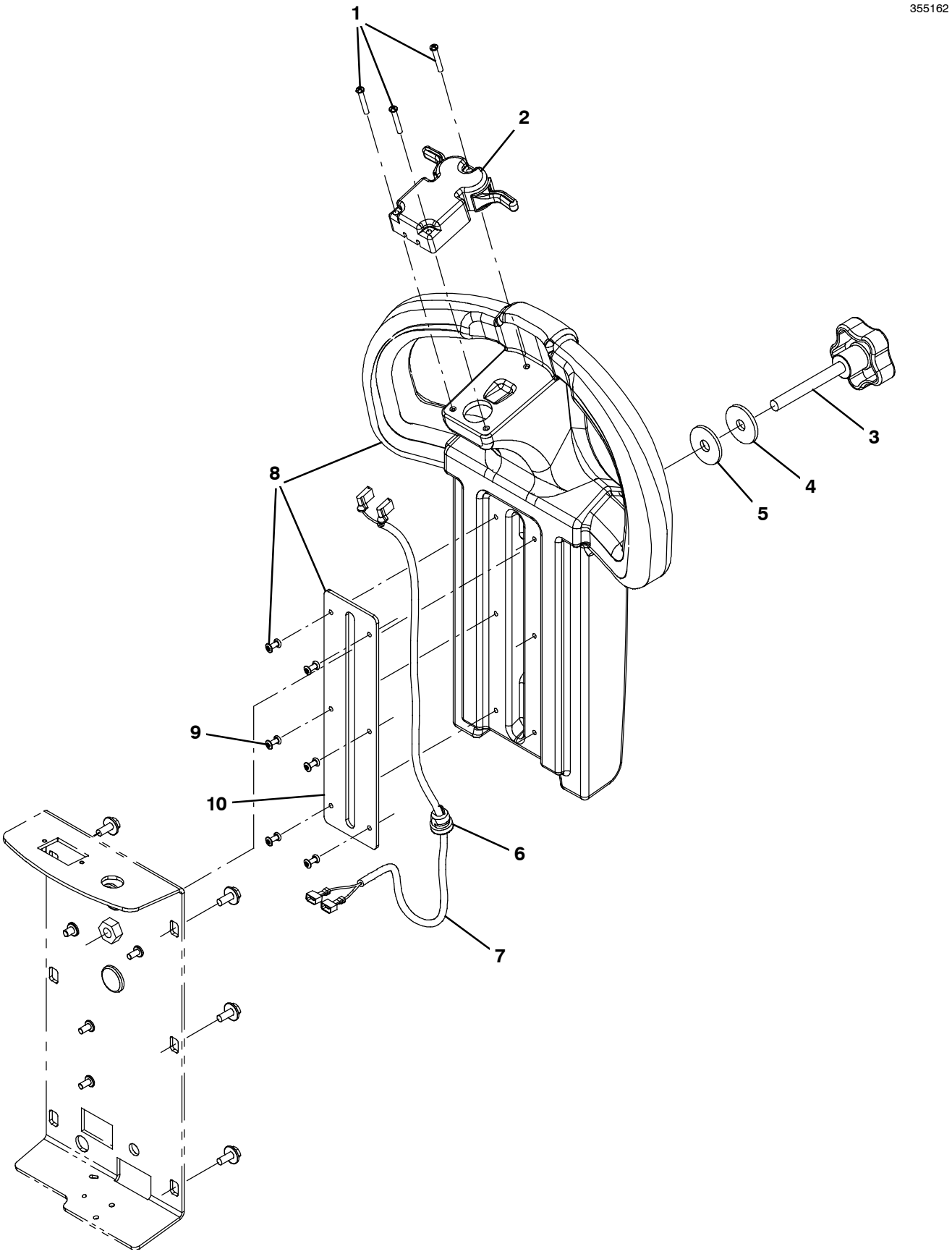

HANDLE GROUP

	Ref.	Part No.	Serial Number		Description	Qty.
	1	1032889	(00000000-	)	Screw, Pan, Phl, 8- 18 X 1.12, F/ Plstc	3
	2	1063200	(00000000-	)	Controlbox Assy, Trigger [Hawk Gray]	1
	3	1041059	(00000000-	)	Knob, Adj M10 X Stud 5- Lobe Blk	1
	4	1049480	(00000000-	)	Washer, .4”id X 1.5”od X .037” Thk W/rbr	1
	5	395119	(00000000-	)	Washer, Flat, 0.41b 1.38d .12, Stl	1
	6	130110	(00000000-	)	Strainrelief, Bshg [Sr6l- 1]	1
	7	1047353	(00000000-	)	Cord Assy, Handle	1
∇	8	9004853	(00000000-	)	Handle Assy Kit [T2]	1
▲	9	1021677	(00000000-	)	Rivet, Blind, .154d X 0.55 X .38d, Ss	6
▲	10	1040903	(00000000-	)	Rail, Handle	1

∇ ASSEMBLY

▲ INCLUDED IN ASSEMBLY

CONTROL PANEL GROUP (S/N 10675132-)

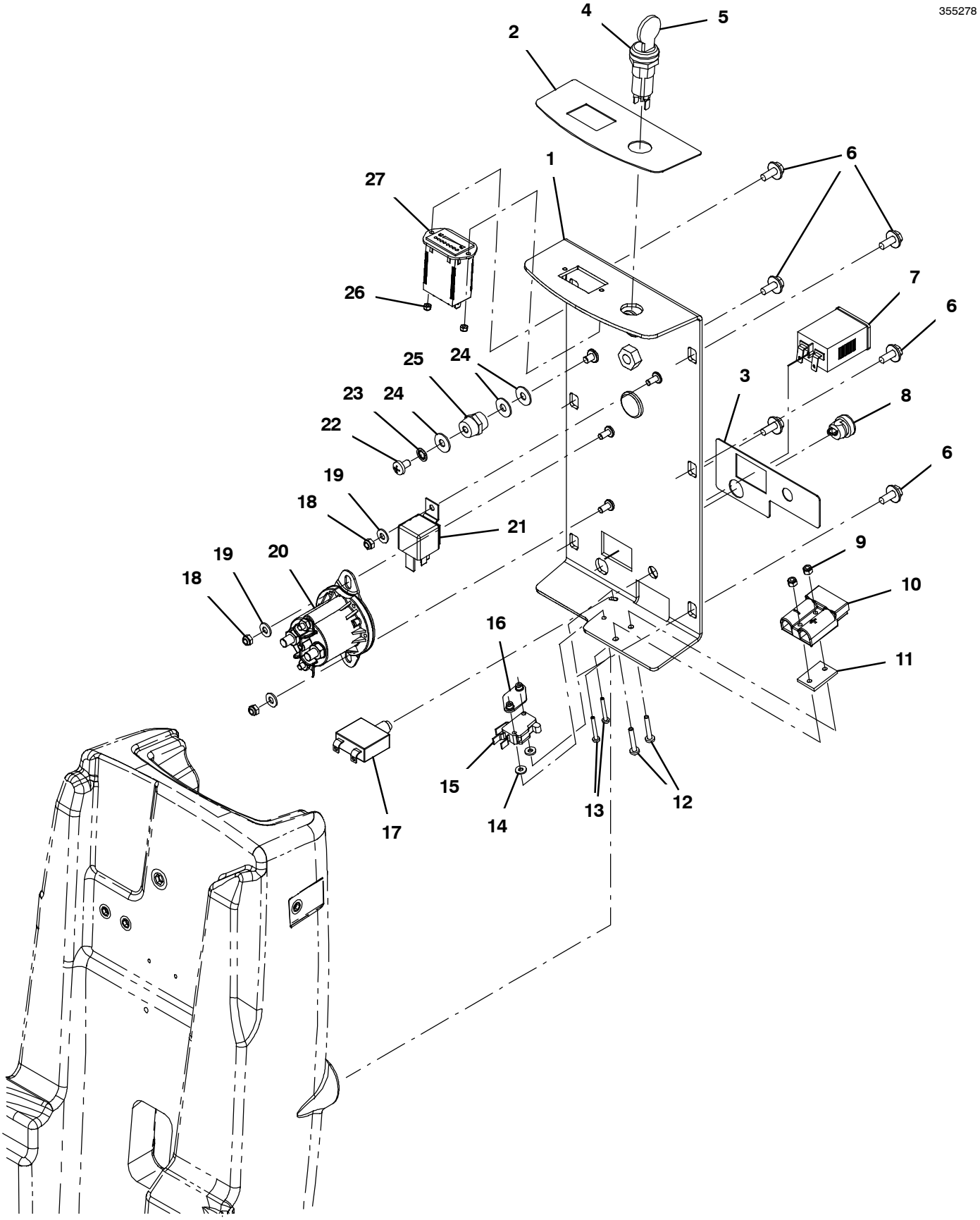

CONTROL PANEL GROUP (S/N 10675132-)

	Ref.	Part No.	Serial Number	Description	Qty.
∇	1	9011353	(10675132-)	Control Panel Kit, Panel W/ Labels [T2]	1
▲	2	1042357	(00000000-)	Label, Control Panel Top	1
▲	3	1042358	(00000000-)	Label, Control Panel Bottom	1
∇	4	1011402	(00000000-)	Switch, Key	1
▲	5	1017696	(00000000-)	Key Set, Replmt [F/ Keyswitch 1011402]	1
	6	1034731	(00000000-)	Screw, Hex, M6 X 1.00 X 16, Ss, Sems	6
	7	1064038	(00000000-)	Gauge, Hourmeter, 05- 277 Volt, Ac / Dc	1
	8	130110	(00000000-)	Strainrelief, Bshg [Sr6l- 1]	1
	9	33932	(00000000-)	Nut, Hex, Lock, M4 X 0.70, Nl, Ss	2
	10	605387	(00000000-)	Connector, Anderson, 50a,Red W/O Contact	1
	11	603331	(00000000-)	Spacer, Plug, Chrgr	1
	12	1033197	(00000000-)	Screw, Pan, Phl, M4 X 0.70 X 25, Ss	2
	13	33933	(00000000-)	Screw, Pan, Phl, M3 X 0.50 X 25, Ss	2
	14	41578	(00000000-)	Washer, Flat, 06, Ss	2
	15	611005	(00000000-)	Switch, Rlr, 16a, Micro	1
	16	1013705	(00000000-)	Plate, Thread, Switch, M3 Nut, 96hr Pl	1
	17	606780	(00000000-)	Circuitbreaker, 30.0a, Resetable	1
	18	09739	(00000000-)	Nut, Hex, Lock, M5 X 0.80, Nl, Ss	3
	19	01683	(00000000-)	Washer, Flat, 10, Ss	3
	20	1066409	(10675132-)	Relay, 24vdc, 150a, No [Trombetta]	1
	21	1012216	(00000000-)	Relay, 24vdc, 070a, Spst No, Plug- In	1
	22	48732	(00000000-)	Screw, Pan, Phl, M6 X 1.00 X 10, Ss	1
	23	07515	(00000000-)	Washer, Lock, Int, 0.25, Ss	1
	24	01684	(00000000-)	Washer, Flat, 0.27b 0.69d .05, Ss	3
	25	1013523	(00000000-)	Stand- Off, Wir, M6	1
	26	579211	(00000000-)	Nut, Hex, Lock, M3 X 0.50, Nl, Ss	2
	27	1011625	(00000000-)	Gauge, Discharge, Battery, 24vdc, Led	1

∇ ASSEMBLY

▲ INCLUDED IN ASSEMBLY

CONTROL PANEL GROUP (S/N 00000000- 10675131)

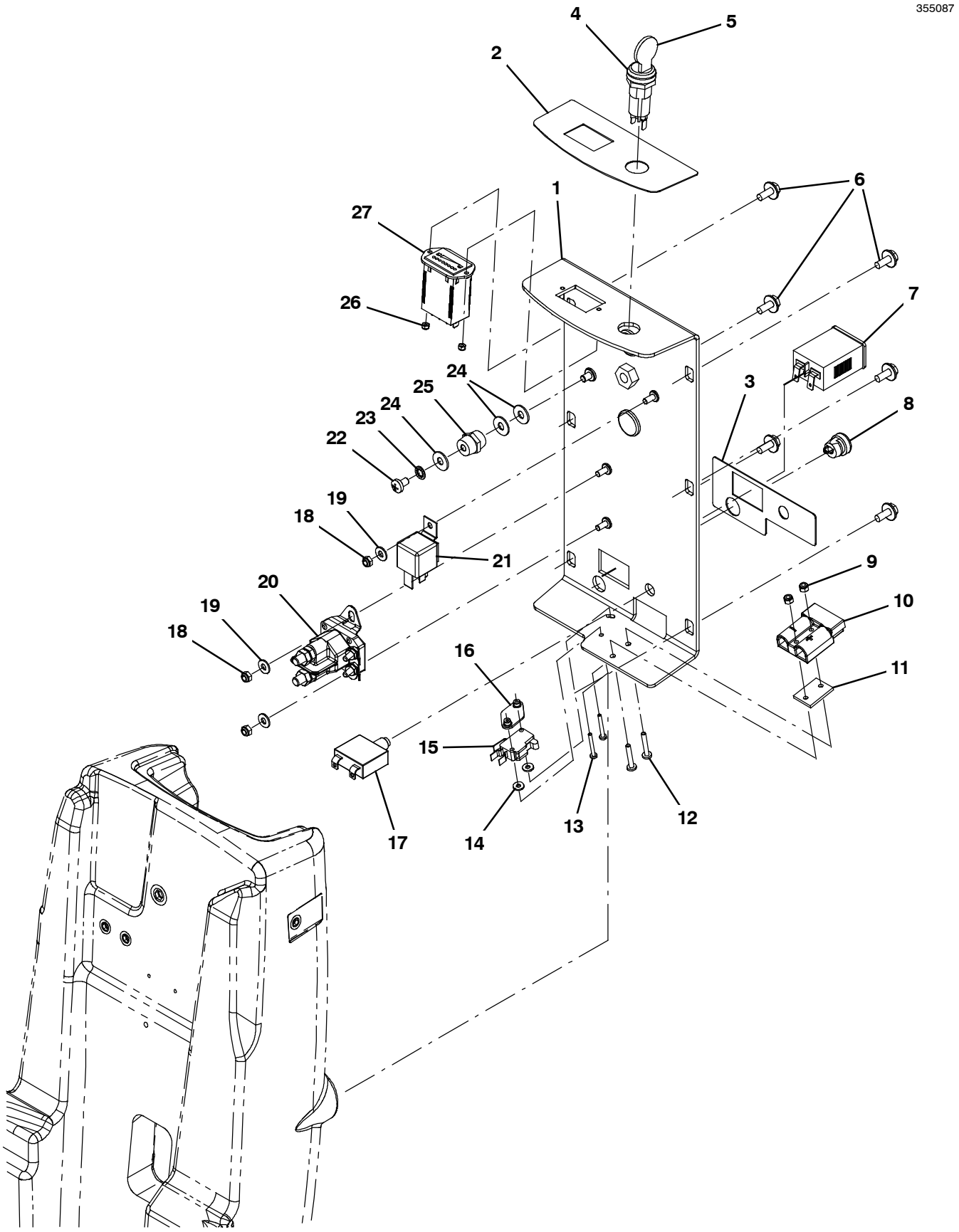

CONTROL PANEL GROUP (S/N 00000000- 10675131)

	Ref.	Part No.	Serial Number	Description	Qty.
∇	1	9004852	(00000000- 10675131)	Control Panel Kit, Panel W/ Labels [T2]	1
▲	2	1042357	(00000000-)	Label, Control Panel Top	1
▲	3	1042358	(00000000-)	Label, Control Panel Bottom	1
∇	4	1011402	(00000000-)	Switch, Key	1
▲	5	1017696	(00000000-)	Key Set, Replmt [F/ Keyswitch 1011402]	1
	6	1034731	(00000000-)	Screw, Hex, M6 X 1.00 X 16, Ss, Sems	6
	7	1064038	(00000000-)	Gauge, Hourmeter, 05- 277 Volt, Ac / Dc	1
	8	130110	(00000000-)	Strainrelief, Bshg [Sr6l- 1]	1
	9	33932	(00000000-)	Nut, Hex, Lock, M4 X 0.70, Nl, Ss	2
	10	605387	(00000000-)	Connector, Anderson, 50a,Red W/O Contact	1
	11	603331	(00000000-)	Spacer, Plug, Chrgr	1
	12	1033197	(00000000-)	Screw, Pan, Phl, M4 X 0.70 X 25, Ss	2
	13	33933	(00000000-)	Screw, Pan, Phl, M3 X 0.50 X 25, Ss	2
	14	41578	(00000000-)	Washer, Flat, 06, Ss	2
	15	611005	(00000000-)	Switch, Rlr, 16a, Micro	1
	16	1013705	(00000000-)	Plate, Thread, Switch, M3 Nut, 96hr Pl	1
	17	606780	(00000000-)	Circuitbreaker, 30.0a, Resetable	1
	18	09739	(00000000-)	Nut, Hex, Lock, M5 X 0.80, Nl, Ss	3
	19	01683	(00000000-)	Washer, Flat, 10, Ss	3
	20	1038490	(00000000- 10675131)	Relay, 24vdc, 100a, No [Trombetta]	1
	21	1012216	(00000000-)	Relay, 24vdc, 070a, Spst No, Plug- In	1
	22	48732	(00000000-)	Screw, Pan, Phl, M6 X 1.00 X 10, Ss	1
	23	07515	(00000000-)	Washer, Lock, Int, 0.25, Ss	1
	24	01684	(00000000-)	Washer, Flat, 0.27b 0.69d .05, Ss	3
	25	1013523	(00000000-)	Stand- Off, Wir, M6	1
	26	579211	(00000000-)	Nut, Hex, Lock, M3 X 0.50, Nl, Ss	2
	27	1057622	(00000000-)	Indicator, Battery, 24vdc, 1.86volt/Cell (Replaced by 1011625)	1

∇ ASSEMBLY

▲ INCLUDED IN ASSEMBLY

WHEEL GROUP (S/N 10728234-)

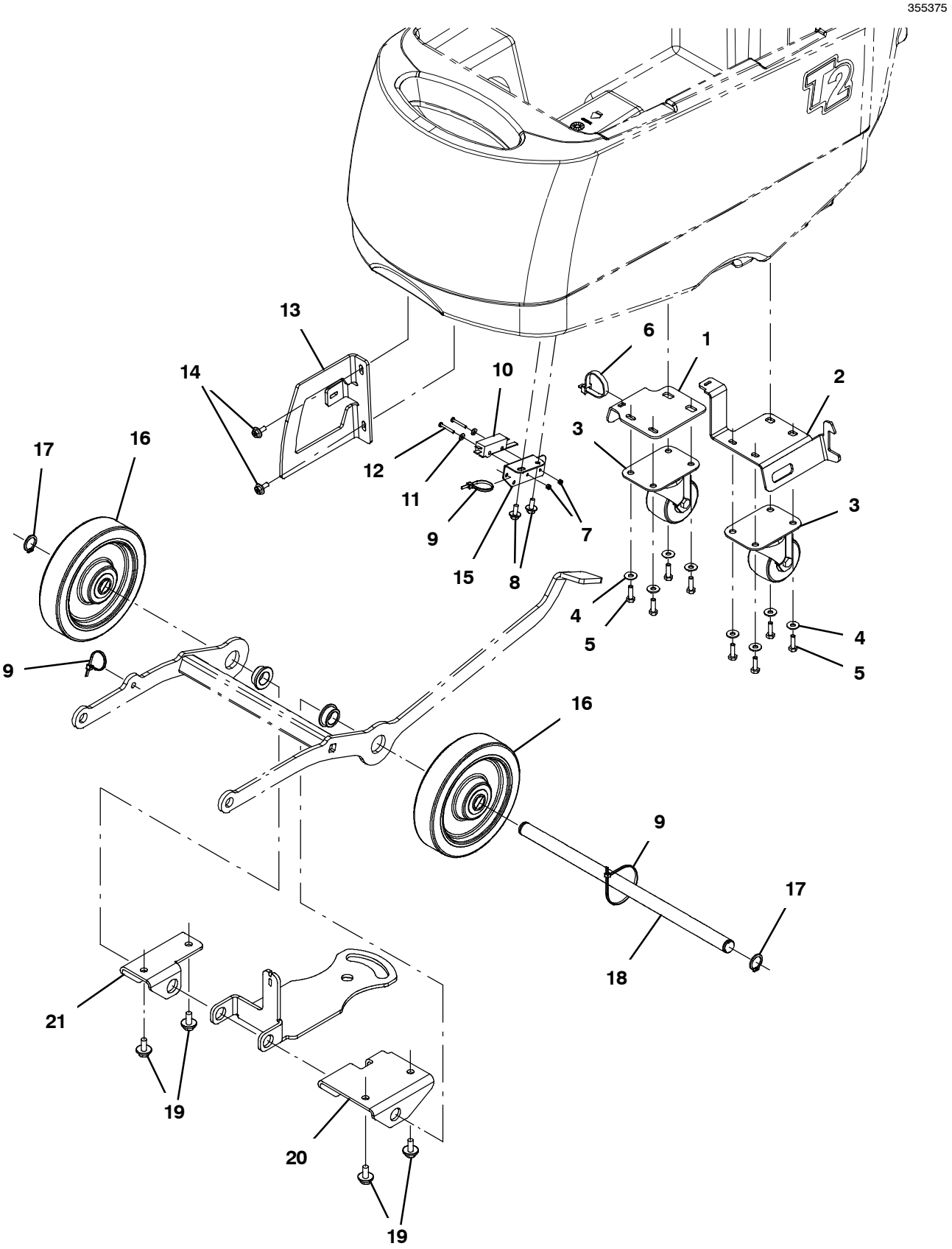

WHEEL GROUP (S/N 10728234-)

Ref.	Part No.	Serial Number	Description	Qty.
1	1041339	(00000000-)	Bracket, Caster, Rh	1
2	1074265	(10728234-)	Bracket, Caster, Lift Latch [T2]	1
3	1043250	(00000000-)	Caster, Swivel, Plate, 70d X 40w X 95h	2
4	01684	(00000000-)	Washer, Flat, 0.27b 0.69d .05, Ss	8
5	12277	(00000000-)	Screw, Hex, M6 X 1.00 X 20, Nl, Ss	8
6	44961	(00000000-)	Tie, Cable, Nyl, 14.5l .30w 4.0 Max D	1
7	579211	(00000000-)	Nut, Hex, Lock, M3 X 0.50, Nl, Ss	2
8	1034731	(00000000-)	Screw, Hex, M6 X 1.00 X 16, Ss, Sems	2
9	130773	(00000000-)	Tie, Cable, Nyl, 11.0l, .14w, 3.0 Max. D	3
10	1008142	(00000000-)	Switch, Snap, 25a Spdt	1
11	41578	(00000000-)	Washer, Flat, 06, Ss	2
12	33933	(00000000-)	Screw, Pan, Phl, M3 X 0.50 X 25, Ss	2
13	1040691	(00000000-)	Bracket, Guide, Roller	1
14	1034731	(00000000-)	Screw, Hex, M6 X 1.00 X 16, Ss, Sems	2
15	1040762	(00000000-)	Bracket, Switch, Lift, Head	1
16	1040129	(00000000-)	Wheel, 07.0d 1.50w, Pyu, Gray	2
17	26428	(10728234-)	Ring, Retaining, Ext, 0.75d, Hd	2
18	1074251	(10728234-)	Axle, Wheel, Main, 19d X 414l, Znc [T2]	1
19	1020341	(10728234-)	Screw, Hex, M8 X 1.25 X 20, Ss, Sems	4
20	1074253	(10728234-)	Bracket, Mtg, Axle, Lh [T2]	1
21	1074250	(10728234-)	Bracket, Mtg, Axle, Rh [T2]	1

WHEEL GROUP (S/N 00000000- 10728233)

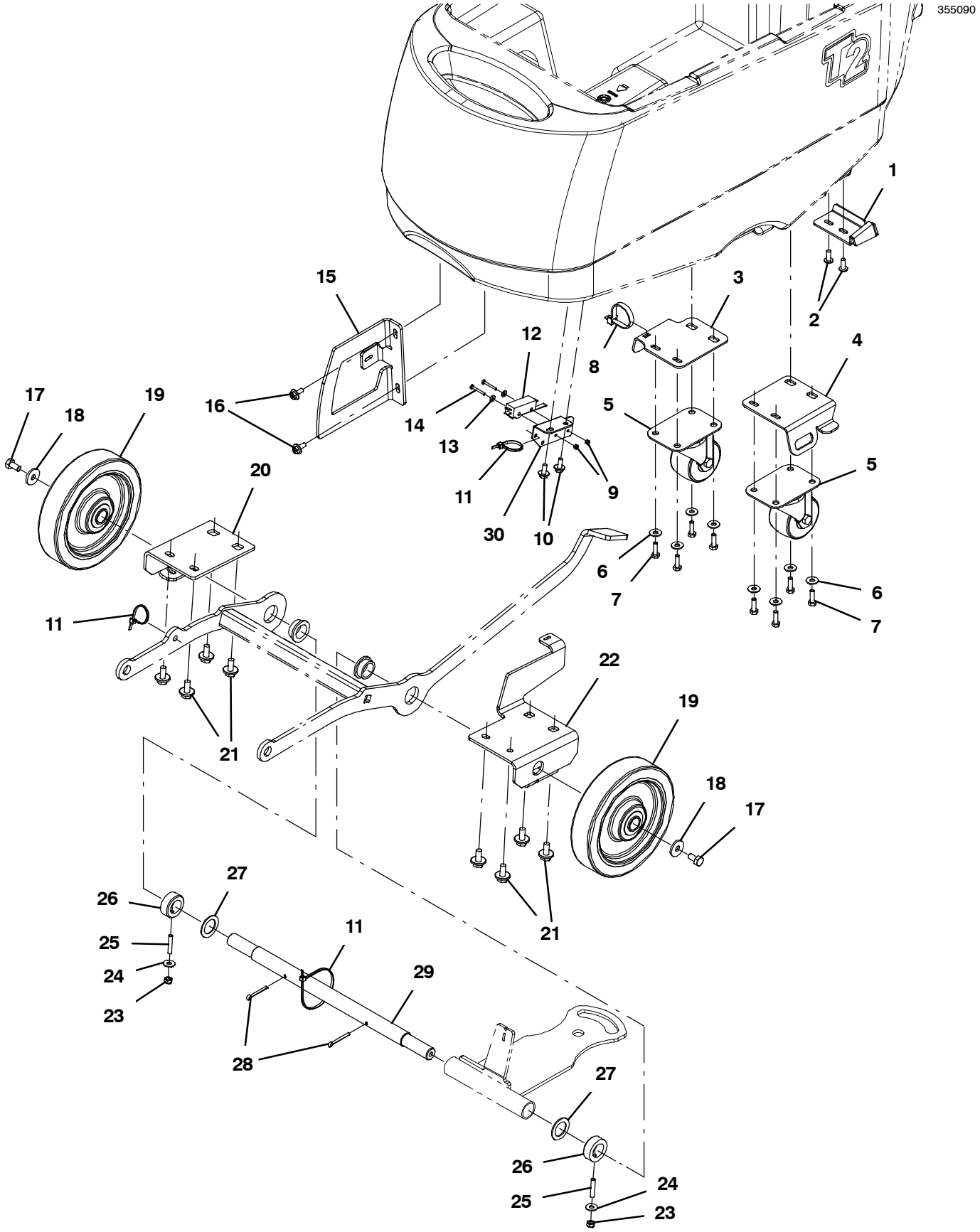

WHEEL GROUP (S/N 00000000- 10728233)

Ref.	Part No.	Serial Number	Description	Qty.
1	1044404	(00000000- 10728233)	Bracket, Locking, Pedal, Foot	1
2	608322	(00000000- 10728233)	Screw, Trs, M6 X 1.00 X 16, Phl, Ss	2
3	1041339	(00000000-)	Bracket, Caster, Rh	1
4	1045639	(00000000- 10728233)	Bracket, Caster, Lh	1
5	1043250	(00000000-)	Caster, Swivel, Plate, 70d X 40w X 95h	2
6	01684	(00000000-)	Washer, Flat, 0.27b 0.69d .05, Ss	8
7	12277	(00000000-)	Screw, Hex, M6 X 1.00 X 20, Nl, Ss	8
8	44961	(00000000-)	Tie, Cable, Nyl, 14.5l .30w 4.0 Max D	1
9	579211	(00000000-)	Nut, Hex, Lock, M3 X 0.50, Nl, Ss	2
10	1034731	(00000000-)	Screw, Hex, M6 X 1.00 X 16, Ss, Sems	2
11	130773	(00000000-)	Tie, Cable, Nyl, 11.0l, .14w, 3.0 Max. D	3
12	1008142	(00000000-)	Switch, Snap, 25a Spdt	1
13	41578	(00000000-)	Washer, Flat, 06, Ss	2
14	33933	(00000000-)	Screw, Pan, Phl, M3 X 0.50 X 25, Ss	2
15	1040691	(00000000-)	Bracket, Guide, Roller	1
16	1034731	(00000000-)	Screw, Hex, M6 X 1.00 X 16, Ss, Sems	2
17	49826	(00000000- 10728233)	Screw, Hex, M8 X 1.25 X 16, Nl, Ss	2
18	1017218	(00000000- 10728233)	Washer, Flat, 0.32b 1.00d .12, Ss	2
19	1040129	(00000000-)	Wheel, 07.0d 1.50w, Pyu, Gray	2
20	1040929	(00000000-)	Bracket, Mtg, Axle, Rh	1
21	1020341	(00000000- 10728233)	Screw, Hex, M8 X 1.25 X 20, Ss, Sems	8
22	1040293	(00000000- 10728233)	Bracket, Mtg, Axle, Lh	1
23	08712	(00000000- 10728233)	Nut, Hex, Lock, M6 X 1.00, Nl, Ss	2
24	01684	(00000000- 10728233)	Washer, Flat, 0.27b 0.69d .05, Ss	2
25	1025853	(00000000- 10728233)	Screw, Set, Soc, M6 X 1.00 X 35, Nl, Ss	2
26	1046211	(00000000- 10728233)	Collar, Axle, 22 Id X 36 Od X 14 W	2
27	82226	(00000000- 10728233)	Washer, Flat, 0.91b 1.38d .06, Stl, Pl	2
28	08236	(00000000- 10728233)	Pin, Cotter, .156 X 1.25	2
29	1040291	(00000000- 10728233)	Axle, Wheel, Main	1
30	1040762	(00000000-)	Bracket, Switch, Lift, Head	1

SCRUB HEAD GROUP, 43 CM (S/N 10996954-)

355878

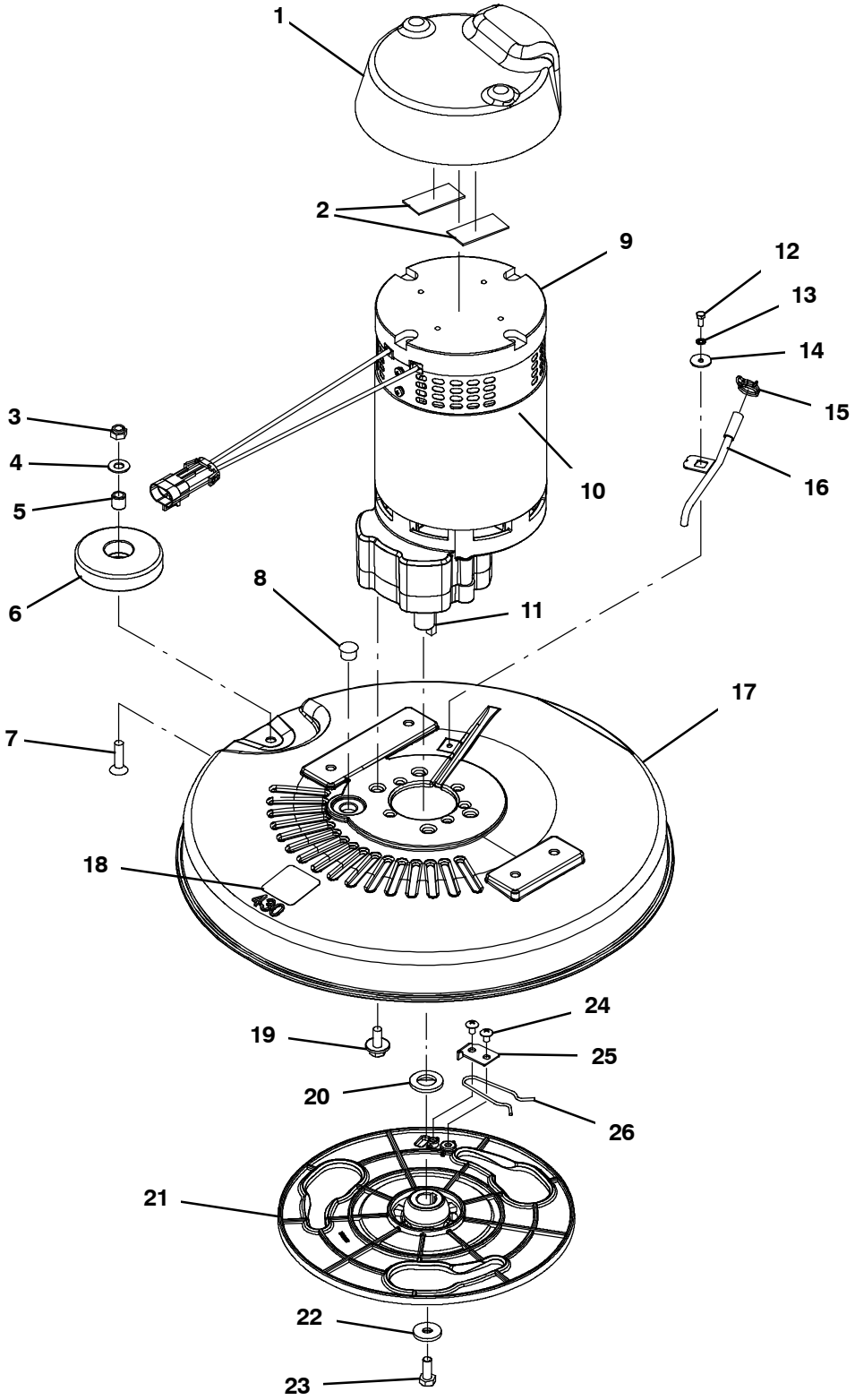

SCRUB HEAD GROUP, 43 CM (S/N 10996954-)

	Ref.	Part No.	Serial Number	Description	Qty.
	1	1047235	(00000000-)	Cover, Brush, Motor	1
	2	NLA	(00000000-)	Tape, Foam, Acrylic, 1.0w X 12.0l (Double Sided Tape - No Longer Available)	2
	3	08713	(00000000-)	Nut, Hex, Lock, M8 X 1.25, Nl, Ss	1
	4	140027	(00000000-)	Washer, Flat, 0.35b 0.75d .04, Ss	1
	5	222460	(00000000-)	Sleeve, P/M, 0.31b 0.50d 0.5l [430ss]	1
	6	1010560	(00000000-)	Wheel, Bmpr, 80d X 25w, Non- Marking	1
	7	79506	(00000000-)	Screw, Flt, Soc, M8 X 1.25 X 30, Ss	1
	8	02431	(10572326-)	Plug, Hole, Rnd, 0.56h .03- .12, Blk Nyl	1
∇	9	1249809	(10996954-)	Motor, Ele, 24vdc 0150rpm 500w, 17mm	1
▲	10	1045790	(10572326-)	Brush Kit, Replmt,Carbon 24vdc[1pk=1set]	1
▲	11	1014328	(10572326-)	Key, Sq, 05mm X 05mm, 25mml	1
	12	1020234	(00000000-)	Screw, Hex, M4 X 0.70 X 10, Ss	1
	13	02938	(00000000-)	Washer, Lock, Int, 08, Ss	1
	14	1009168	(00000000-)	Washer, Flat, 0.17b 0.75d .04, Ss	1
	15	607775	(00000000-)	Clamp, Hose, Wir, .63 - .66, Blk	1
	16	1016155	(00000000-)	Tube Wldt, Supply, Water	1
∇	17	9004849	(00000000-)	Scrubhead Kit, Housing W/ Label [T2]	1
▲	18	578769	(00000000-)	Label, Parts, Moving [Textless]	1
	19	1020341	(10572326-)	Screw, Hex, M8 X 1.25 X 20, Ss, Sems	4
	20	1022549	(10572326-)	Spacer, Shaft, 17.15b 30.0d 3.0l, Ss	1
	21	9014623	(10572326-)	Hub Kit, Drive, 3lug, Nyl [T2/T3, T300]	1
	22	1017218	(10572326-)	Washer, Flat, 0.32b 1.00d .12, Ss	1
	23	12273	(10572326-)	Screw, Hex, M8 X 1.25 X 20, Nl, Ss	1
	24	140197	(xxxxxxxx-)	Screw, Trs, Phl, 10- 24 X 0.38, Sems, Ss	2
	25	1011201	(00000000-)	Plate, Clamp, Brush	1
	26	1013188	(00000000-)	Clip, Spring, Drive Plate [T3], Clr Zn	1

∇ ASSEMBLY

▲ INCLUDED IN ASSEMBLY

SCRUB HEAD GROUP, 43 CM (S/N 10572326-10996953)

355277

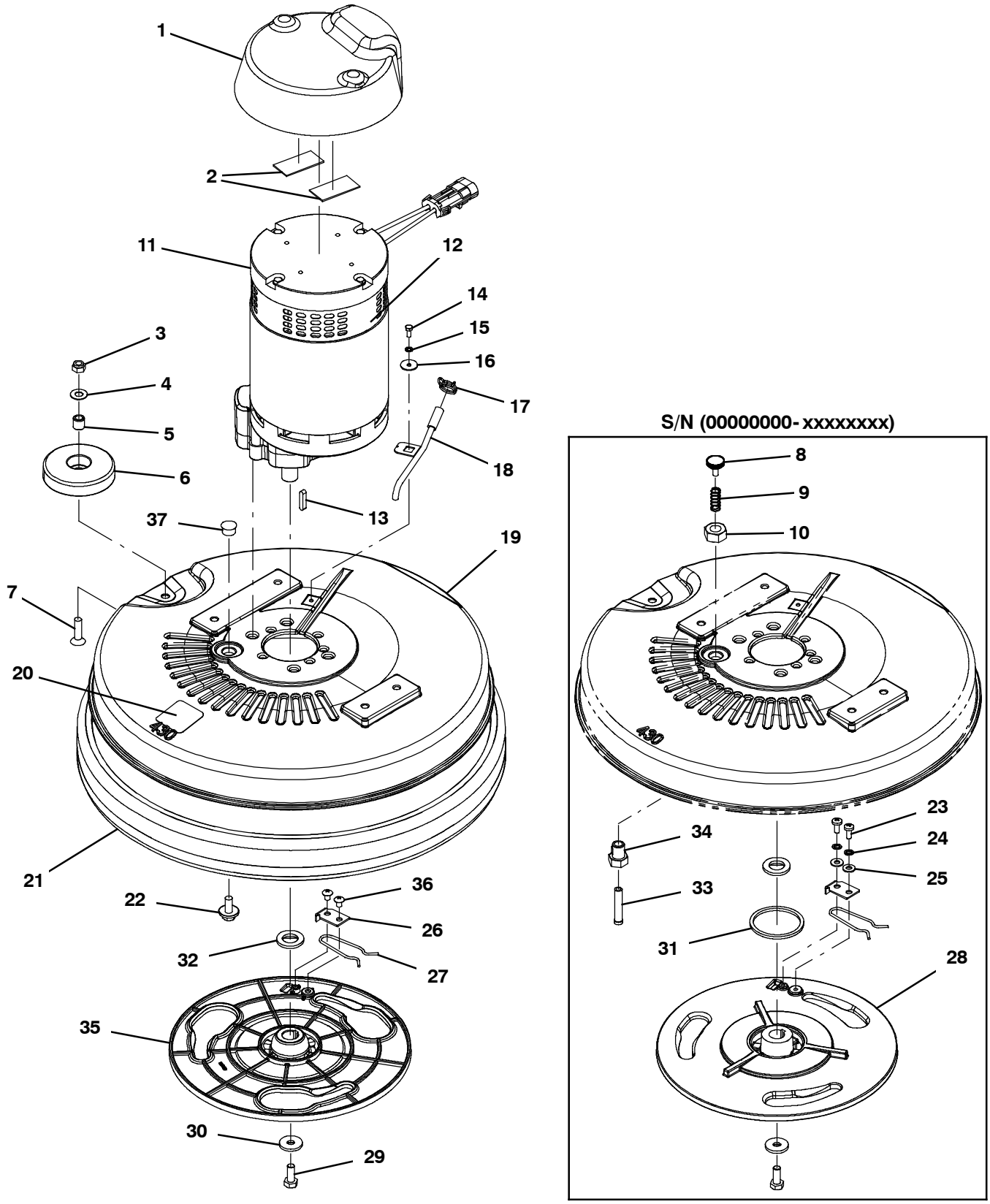

SCRUB HEAD GROUP, 43 CM (S/N 10572326- 10996953)

	Ref.	Part No.	Serial Number	Description	Qty.
	1	1047235	(00000000-)	Cover, Brush, Motor	1
	2	NLA	(00000000-)	Tape, Foam, Acrylic, 1.0w X 12.0l (Double Sided Tape - No Longer Available)	2
	3	08713	(00000000-)	Nut, Hex, Lock, M8 X 1.25, Nl, Ss	1
	4	140027	(00000000-)	Washer, Flat, 0.35b 0.75d .04, Ss	1
	5	222460	(00000000-)	Sleeve, P/M, 0.31b 0.50d 0.5l [430ss]	1
	6	1010560	(00000000-)	Wheel, Bmpr, 80d X 25w, Non- Marking	1
	7	79506	(00000000-)	Screw, Flt, Soc, M8 X 1.25 X 30, Ss	1
	8	603012	(00000000- xxxxxxxx)	Knob, Rnd, 19.0d M6 X 12, Stud, Plstc,Pl (Replaced by 9014623)	1
	9	1037400	(00000000- xxxxxxxx)	Spring, Cmpr, .42od, .04wir, 1.0l, Pl,Mw (Replaced by 9014623)	1
	10	1037470	(00000000- xxxxxxxx)	Nut, Hex, M14 X 2.00, Ss (Replaced by 9014623)	1
∇	11	1069394	(10572326- 10996953)	Motor Kit, 1disk, 43/50cm [T2/T3- Na]	1
▲	12	1045790	(10572326-)	Brush Kit, Replmt,Carbon 24vdc[1pk=1set]	1
▲	13	1014328	(10572326-)	Key, Sq, 05mm X 05mm, 25mml	1
	14	1020234	(00000000-)	Screw, Hex, M4 X 0.70 X 10, Ss	1
	15	02938	(00000000-)	Washer, Lock, Int, 08, Ss	1
	16	1009168	(00000000-)	Washer, Flat, 0.17b 0.75d .04, Ss	1
	17	607775	(00000000-)	Clamp, Hose, Wir, .63 - .66, Blk	1
	18	1016155	(00000000-)	Tube Wldt, Supply, Water	1
∇	19	9004849	(00000000-)	Scrubhead Kit, Housing W/ Label [T2]	1
▲	20	578769	(00000000-)	Label, Parts, Moving [Textless]	1
	21	1055019	(00000000- 10996953)	Bumper, Head, 43cm, W/ Bristle Skirt, Im	1
	22	1020341	(10572326-)	Screw, Hex, M8 X 1.25 X 20, Ss, Sems	4
	23	09200	(00000000- xxxxxxxx)	Screw, Pan, Phl, M5 X 0.80 X 12, Ss	2
	24	07514	(00000000- xxxxxxxx)	Washer, Lock, Int, 10, Ss	2
	25	01683	(00000000- xxxxxxxx)	Washer, Flat, 10, Ss	2
	26	1011201	(00000000-)	Plate, Clamp, Brush	1
	27	1013188	(00000000-)	Clip, Spring, Drive Plate [T3], Clr Zn	1
	28	1063046	(10572326-)	Hub, Drive, 3lug, Alm, 17.0b [Heavy Dp] (Replaced by 9014623)	1
	29	12273	(10572326-)	Screw, Hex, M8 X 1.25 X 20, Nl, Ss	1
	30	1017218	(10572326-)	Washer, Flat, 0.32b 1.00d .12, Ss	1
	31	1016426	(00000000- xxxxxxxx)	Ring, Water, Containment (Replaced by 9014623)	1
	32	1022549	(10572326-)	Spacer, Shaft, 17.15b 30.0d 3.0l, Ss	1
	33	1037399	(00000000- xxxxxxxx)	Pin, Stop, 8.3mmd X 42mml (Replaced by 9014623)	1
	34	605825	(00000000- xxxxxxxx)	Screw, Stop, Head Pin (Replaced by 9014623)	1
	35	9014623	(xxxxxxxx-)	Hub Kit, Drive, 3lug, Nyl [T2/T3, T300]	1
	36	140197	(xxxxxxxx-)	Screw, Trs, Phl, 10- 24 X 0.38, Sems, Ss	2
	37	02431	(xxxxxxxx-)	Plug, Hole, Rnd, 0.56h .03- .12, Blk Nyl	1

∇ ASSEMBLY

▲ INCLUDED IN ASSEMBLY

SCRUB HEAD GROUP, 43 CM (S/N 00000000- 10572325)

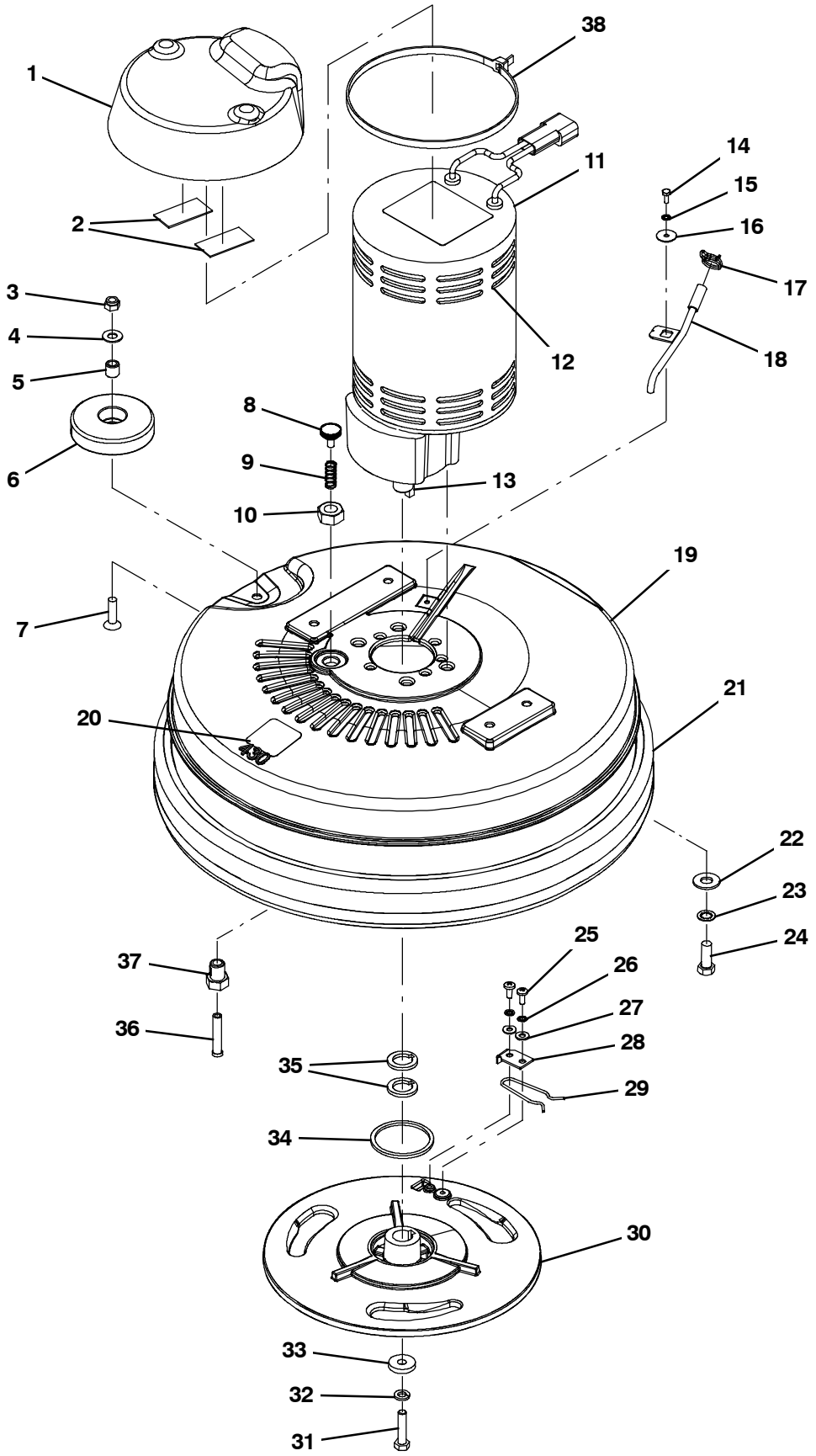

SCRUB HEAD GROUP, 43 CM (S/N 00000000- 10572325)

	Ref.	Part No.	Serial Number	Description	Qty.
	1	1047235	(00000000-)	Cover, Brush, Motor	1
	2	NLA	(00000000-)	Tape, Foam, Acrylic, 1.0w X 12.0l (Double Sided Tape - No Longer Available)	2
	3	08713	(00000000-)	Nut, Hex, Lock, M8 X 1.25, Nl, Ss	1
	4	140027	(00000000-)	Washer, Flat, 0.35b 0.75d .04, Ss	1
	5	222460	(00000000-)	Sleeve, P/M, 0.31b 0.50d 0.5l [430ss]	1
	6	1010560	(00000000-)	Wheel, Bmpr, 80d X 25w, Non- Marking	1
	7	79506	(00000000-)	Screw, Flt, Soc, M8 X 1.25 X 30, Ss	1
	8	603012	(00000000-)	Knob, Rnd, 19.0d M6 X 12, Stud, Plstc,Pl	1
	9	1037400	(00000000-)	Spring, Cmpr, .42od, .04wir, 1.0l, Pl,Mw	1
	10	1037470	(00000000-)	Nut, Hex, M14 X 2.00, Ss	1
∇	11	1028301	(00000000- 10572325)	Motor, Ele, 24vdc 0200rpm 1.00hp Gear (Replaced by 1069394)	1
▲	12	222615	(00000000- 10572325)	Vr, Brush, Motor, Ele [lp 572012] (1Pkg = 1Pc)	4
▲	13	00930	(00000000- 10572325)	Key, Sq, 0.25 X 0.25, 1.50l	1
	14	1020234	(00000000-)	Screw, Hex, M4 X 0.70 X 10, Ss	1
	15	02938	(00000000-)	Washer, Lock, Int, 08, Ss	1
	16	1009168	(00000000-)	Washer, Flat, 0.17b 0.75d .04, Ss	1
	17	607775	(00000000-)	Clamp, Hose, Wir, .63 - .66, Blk	1
	18	1016155	(00000000-)	Tube Wldt, Supply, Water	1
∇	19	9004849	(00000000-)	Scrubhead Kit, Housing W/ Label [T2]	1
▲	20	578769	(00000000-)	Label, Parts, Moving [Textless]	1
	21	1055019	(00000000-)	Bumper, Head, 43cm, W/ Bristle Skirt, Im	1
	22	01686	(00000000- 10572325)	Washer, Flat, 0.44b 1.00d .08, Ss	4
	23	43953	(00000000- 10572325)	Washer, Lock, Int, 0.38, Ss	4
	24	69225	(00000000- 10572325)	Screw, Hex, .38- 16 X 1.00, Ss	4
	25	09200	(00000000-)	Screw, Pan, Phl, M5 X 0.80 X 12, Ss	2
	26	07514	(00000000-)	Washer, Lock, Int, 10, Ss	2
	27	01683	(00000000-)	Washer, Flat, 10, Ss	2
	28	1011201	(00000000-)	Plate, Clamp, Brush	1
	29	1013188	(00000000-)	Clip, Spring, Drive Plate [T3], Clr Zn	1
	30	1054019	(00000000- 10572325)	Hub, Drive, 3lug, Alm, 19.0b [Diecast]	1
	31	1035038	(00000000- 10572325)	Screw, Hex, .31- 18 X 1.38, Ss, Nl	1
	32	140015	(00000000- 10572325)	Washer, Lock, Split, 0.31, Ss	1
	33	1028796	(00000000- 10572325)	Washer, Flat, 0.33b 1.00d .18, Stl, Pl	1
	34	1016426	(00000000-)	Ring, Water, Containment	1
	35	621471	(00000000- 10572325)	Spacer, 0.75b 1.12d 0.12l,	2
	36	1037399	(00000000-)	Pin, Stop, 8.3mmd X 42mml	1
	37	605825	(00000000-)	Screw, Stop, Head Pin	1
	38	222809	(00000000- 10572325)	Tie, Cable, Nyl, 29.8l .30w 9.0 Max D	1

∇ ASSEMBLY

▲ INCLUDED IN ASSEMBLY

SCRUB HEAD LIFT GROUP

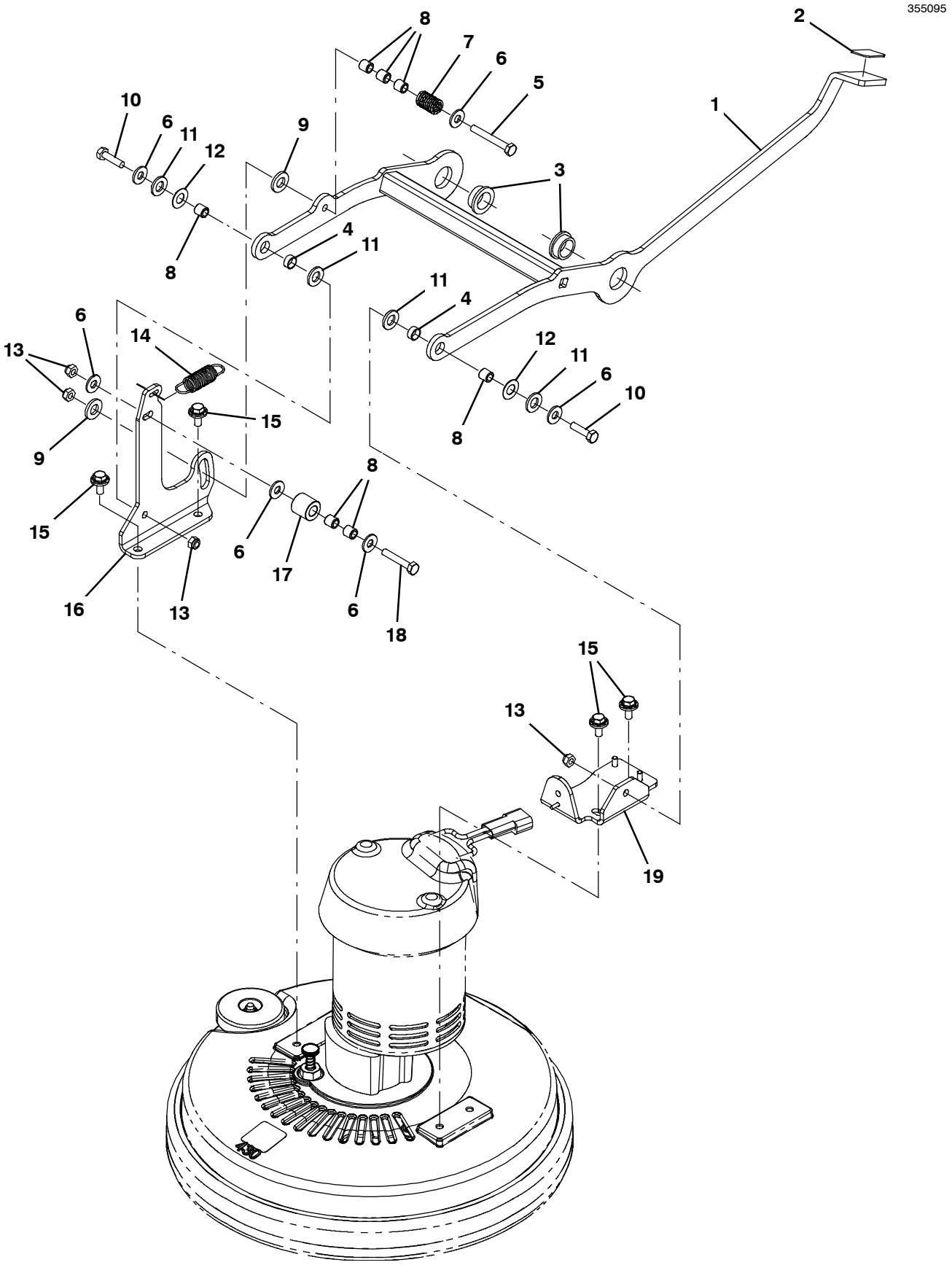

SCRUB HEAD LIFT GROUP

	Ref.	Part No.	Serial Number	Description	Qty.
∇	1	9013793	(10728234-)	Lift Wldt Kit, Head, 1disk, 43cm [T2]	1
▲	2	1014283	(00000000-)	Pad, Adh, 28mm X 36mm, Blk [Non- Slip]	1
▲	3	1074268	(10728234-)	Bushing, Flng, 19mmb 28mmd 12mml [T2]	2
▲	4	630188	(00000000-)	Bearing, Journal, .50id X .25l	2
∇	1	9004844	(00000000- 10728233)	Headlift Kit, Weldment Assy [T2]	1
▲	2	1014283	(00000000-)	Pad, Adh, 28mm X 36mm, Blk [Non- Slip]	1
▲	3	1040869	(00000000- 10728233)	Bushing, Flng, 22mmb 28mmd 12mml	2
▲	4	630188	(00000000-)	Bearing, Journal, .50id X .25l	2
	5	1014163	(00000000-)	Screw, Hex, M8 X 1.25 X 60, Fl, Ss	1
	6	01685	(00000000-)	Washer, Flat, 0.38b 0.88d .08, Ss	6
	7	140430	(00000000-)	Spring, Cmpr, 0.70od .10wir 01.7l	1
	8	222460	(00000000-)	Sleeve, P/M, 0.31b 0.50d 0.5l [430ss]	7
	9	140127	(00000000-)	Washer, Thrust, 0.51b 1.00d 0.12w, Brz	2
	10	09011	(00000000-)	Screw, Hex, M8 X 1.25 X 30, Ss	2
	11	1013936	(00000000-)	Washer, Flat, 0.51b 0.94d .10, Nyl	4
	12	20536- 2	(00000000-)	Washer, Flat, 0.50b 1.00d .03, Nyl	2
	13	08713	(00000000-)	Nut, Hex, Lock, M8 X 1.25, Nl, Ss	4
	14	1018916	(00000000-)	Spring, Extn, 0.75od 0.07wir 02.8l	1
	15	1020341	(00000000-)	Screw, Hex, M8 X 1.25 X 20, Ss, Sems	4
	16	1043109	(00000000-)	Bracket, Mtg, Head, Roller	1
	17	1014020	(00000000-)	Roller, Lift, Dual Disk Head	1
	18	222505	(00000000-)	Screw, Hex, M8 X 1.25 X 45, Ss	1
	19	1040950	(00000000-)	Bracket, Mtg, Head And Water Valve	1

∇ ASSEMBLY

▲ INCLUDED IN ASSEMBLY

SQUEEGEE GROUP

355713

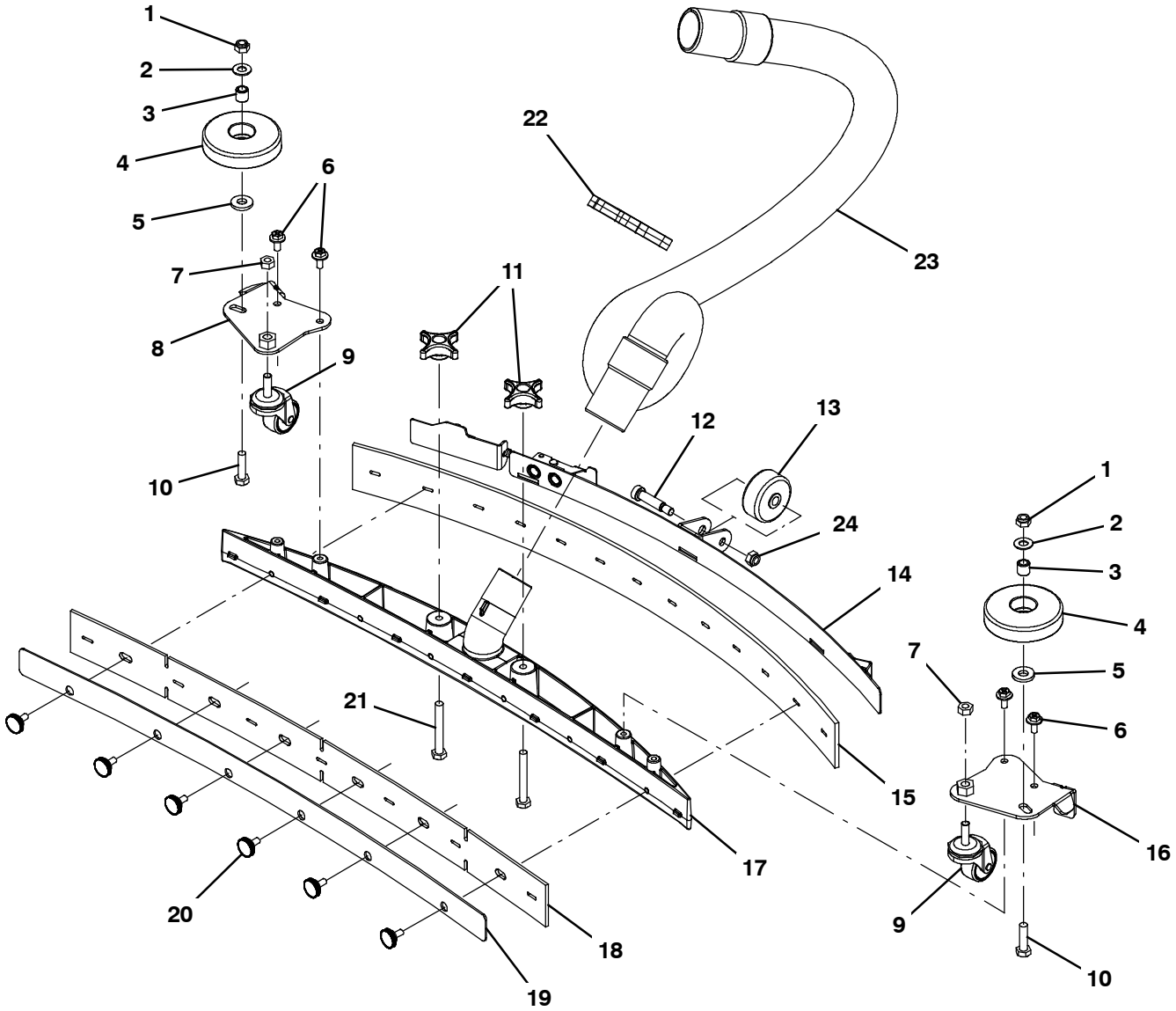

SQUEEGEE GROUP

	Ref.	Part No.	Serial Number	Description	Qty.
∇		9004851	(00000000-)	Squeegee Assy Kit [T2]	1
▲	1	08713	(00000000-)	Nut, Hex, Lock, M8 X 1.25, Nl, Ss	2
▲	2	140027	(00000000-)	Washer, Flat, 0.35b 0.75d .04, Ss	2
▲	3	222460	(00000000-)	Sleeve, P/M, 0.31b 0.50d 0.5l [430ss]	2
▲	4	1010560	(00000000-)	Wheel, Bmpr, 80d X 25w, Non- Marking	2
▲	5	69461	(00000000-)	Washer, Flat, 0.38b 0.88d .12, Stl, Pl	2
▲	6	1034731	(00000000-)	Screw, Hex, M6 X 1.00 X 16, Ss, Sems	4
▲	7	07786	(00000000-)	Nut, Hex, Std, M8 X 1.25, Ss	2
▲	8	1042757	(00000000-)	Bracket, Caster, Bmpr Wheel, Rh	1
▲	9	1042507	(00000000-)	Caster, Swivel, 38d, M8 X 1.25, Clr Zn	2
▲	10	09011	(00000000-)	Screw, Hex, M8 X 1.25 X 30, Ss	2
▲	11	1010558	(00000000-)	Knob, Star, 2.00d 4ear 0.7l M8x1.25,Thru	2
▲	12	600187	(00000000-)	Bolt, Shld, .38d X 1.25, .31- 18	1
▲	13	630477	(00000000-)	Wheel, Pyu, 02.0d 0.38w, Gray	1
▲	14	1050699	(00000000-)	Assy, Band, Sqge, Rear [T2]	1
▲	15	1045384	(00000000-)	Blade, Sqge, Rear, 27.84l Ure (Standard)	1
	15	1045383	(00000000-)	Blade, Sqge, Rear, 27.84l Gum (Optional)	1
	15	1040626	(00000000-)	Blade, Sqge, Rear, 27.84l Linatex (Optional)	1
▲	16	1042529	(00000000-)	Bracket, Caster, Bmpr Wheel, Lh	1
▲	17	1040647	(00000000-)	Frame, Sqge	1
▲	18	1045381	(00000000-)	Blade, Sqge, Front, 26.93l Ure (Standard)	1
	18	1045380	(00000000-)	Blade, Sqge, Front, 26.93l Gum (Optional)	1
	18	1040983	(00000000-)	Blade, Sqge, Front, 26.93l Linatex (Optional)	1
▲	19	1041072	(00000000-)	Band, Sqge, Front	1
▲	20	1049977	(00000000-)	Knob, Rnd, 19.0d M6 X 12, Stud, Plstc, Ss	6
▲	21	1014163	(00000000-)	Screw, Hex, M8 X 1.25 X 60, Fl, Ss	2
	22	1014079	(00000000-)	Clip, Grip, Hose, 1.50id, Dbl, Blk Pyp	1
	23	1042313	(00000000-)	Hose, Vacuum, 1.50id X 049.6l, 2cuff	1
▲	24	01760	(00000000-)	Nut, Hex, Lock, .31- 18, Nl, Thin	1

∇ ASSEMBLY

▲ INCLUDED IN ASSEMBLY

SQUEEGEE LIFT GROUP

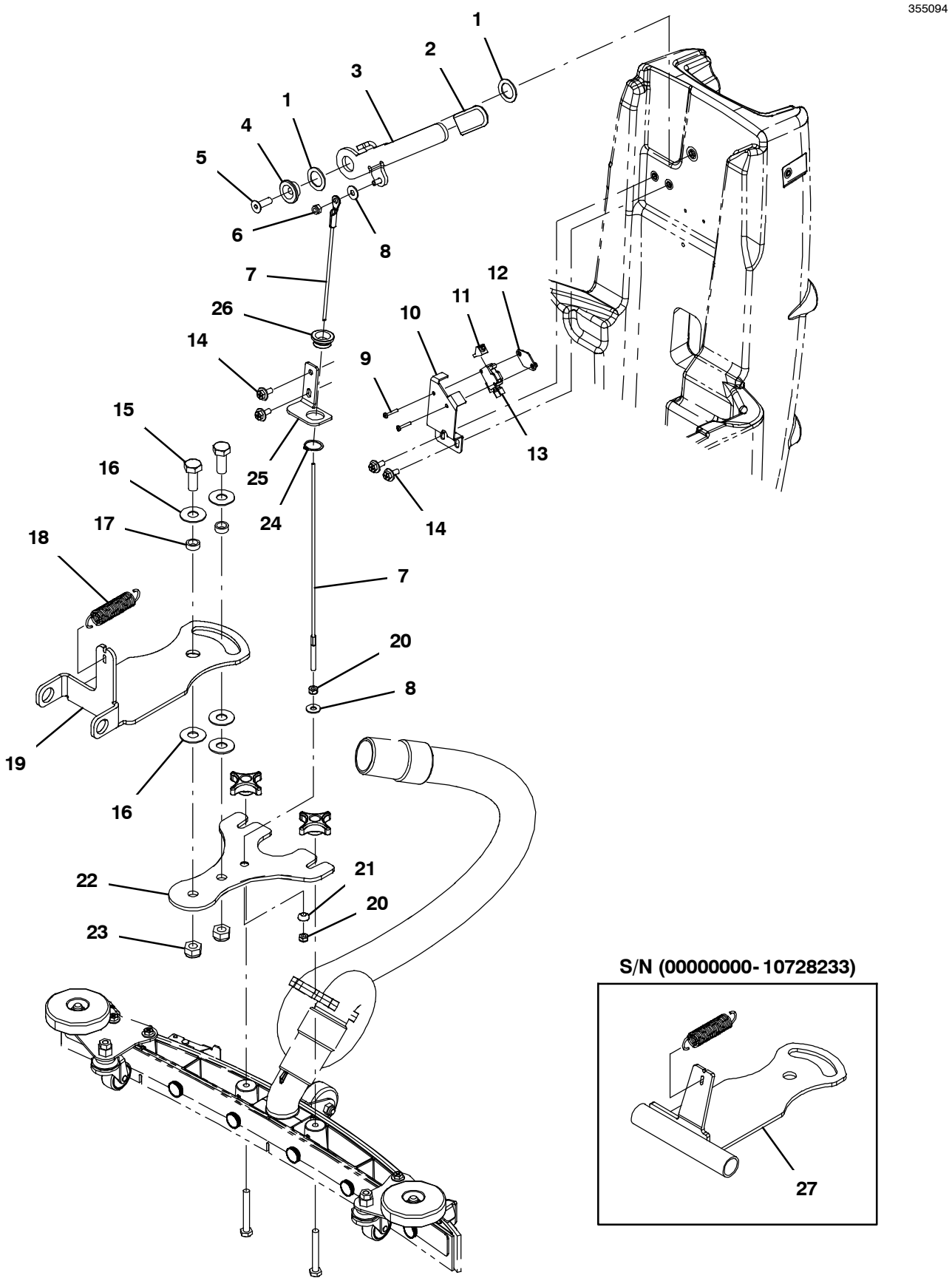

SQUEEGEE LIFT GROUP

Ref.	Part No.	Serial Number	Description	Qty.
1	1026051	(00000000-)	Washer, Flat, 0.79b 1.18d .06, Nyl	2
2	1045878	(00000000-)	Grip, Lever, Vinyl	1
3	1042050	(00000000-)	Lever, Sqge	1
4	1041442	(00000000-)	Bushing, Retainer, M8 Fh Screw	1
5	222692	(00000000-)	Screw, Flt, Soc, M8 X 1.25 X 25, Nl, Ss	1
6	08708	(00000000-)	Nut, Hex, Lock, M6 X 1.00, Nl	1
7	1041472	(00000000-)	Cable, Glv 3mmd 700mml M6eye /M6- 1.0	1
8	01684	(00000000-)	Washer, Flat, 0.27b 0.69d .05, Ss	1
9	06922	(00000000-)	Screw, Pan, Phl, M3 X 0.50 X 20, 4.8	2
10	1042117	(00000000-)	Plate, Mount, Switch, Vacuum	1
11	600372	(00000000-)	Boot, Switch	1
12	1013705	(00000000-)	Plate, Thread, Switch, M3 Nut, 96hr Pl	1
13	611005	(00000000-)	Switch, Rlr, 16a, Micro	1
14	1034731	(00000000-)	Screw, Hex, M6 X 1.00 X 16, Ss, Sems	4
15	12309	(00000000-)	Screw, Hex, M12 X 1.75 X 30, Ss	2
16	140045	(00000000-)	Washer, Flat, 0.51b 1.25d .06, Ss	2
17	1013662	(00000000-)	Bushing, Sleeve, 12mmb 16mmd 7mml,Pm Yel	2
18	1014131	(00000000-)	Spring, Extn, 0.62od 0.06wir 03.0l, Pl	1
19	1074252	(10728234-)	Bracket, Sqge, Lift [T2]	1
20	08712	(00000000-)	Nut, Hex, Lock, M6 X 1.00, Nl, Ss	2
21	1046288	(00000000-)	Washer, Spherical, 6.4b 14d, Pl	1
22	1039432	(00000000-)	Bracket, Sqge, Pivot	1
23	09741	(00000000-)	Nut, Hex, Lock, M12 X 1.75, Nl, Ss	2
24	621236	(00000000-)	Ring, Retaining, Ext, 0.81d	1
25	1048449	(00000000-)	Bracket, Guide, Cable	1
26	1009363	(00000000-)	Bushing, Cable	1
27	1040375	(00000000- 10728233)	Bracket Wldt, Lift, Sqge	1

SOLUTION GROUP

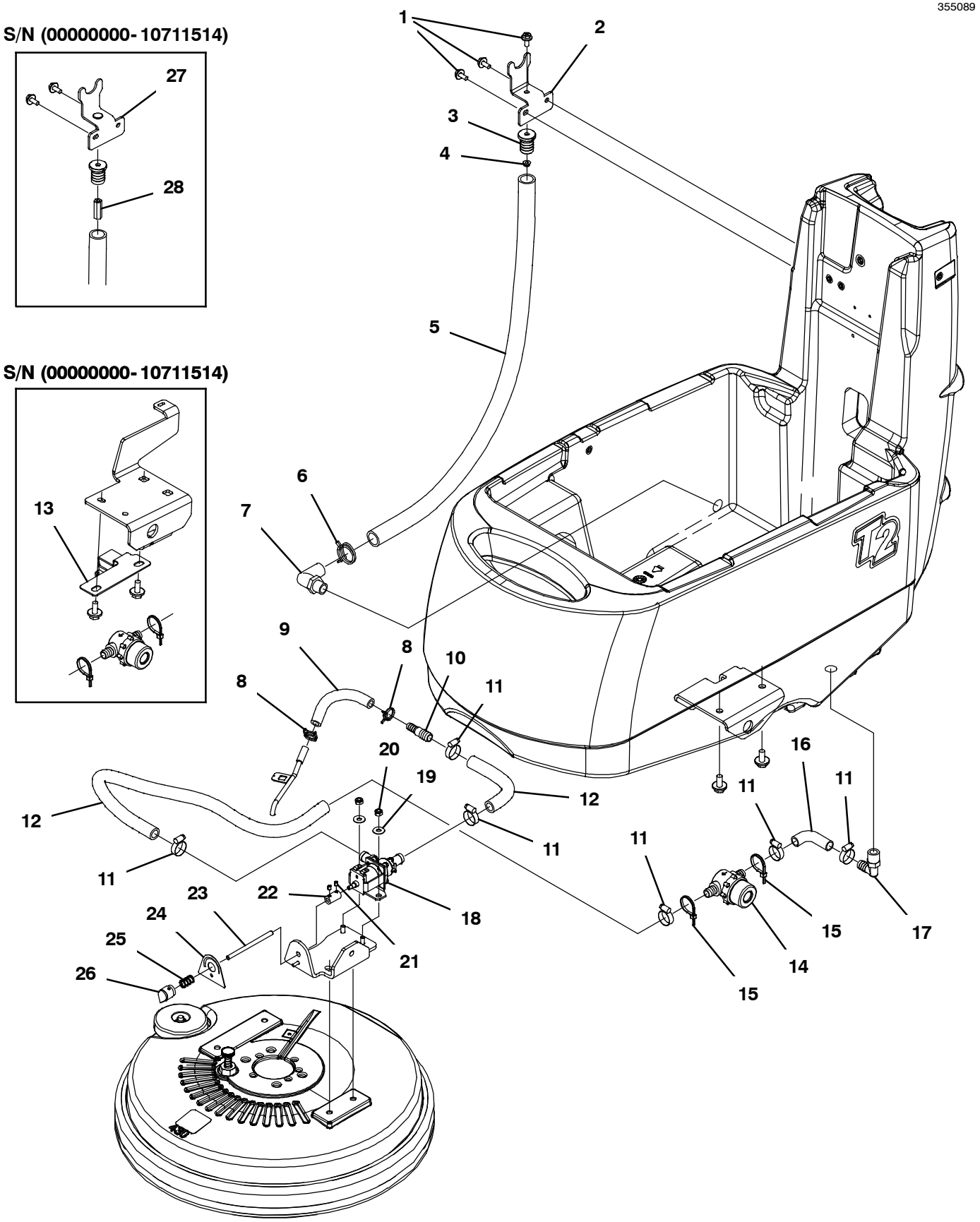

SOLUTION GROUP

	Ref.	Part No.	Serial Number	Description	Qty.
	1	1034731	(00000000-)	Screw, Hex, M6 X 1.00 X 16, Ss, Sems	3
	2	9013299	(10711515-)	Bracket Kit, Hanger, Sqge, Hose, Ci [T2] (Kit Includes Item #1 (Qty 1) Through Item #4)	1
	3	1035469	(00000000-)	Fitting, Plstc, Bm12 [Sight Tube]	1
	4	1040381	(10711515-)	Nut, Hex, Flng, M6 X 1.00, Ss	1
	5	1041008	(00000000-)	Hose, Drain, Soltn Tank, 0.75id, Vyl	1
	6	608915	(00000000-)	Clamp, Hose, Wir, 1.03 - 1.09	1
	7	40145	(00000000-)	Fitting, Plstc, E90, Bm12/Pm08	1
	8	607775	(00000000-)	Clamp, Hose, Wir, .63 - .66, Blk	2
	9	613451	(00000000-)	Hose, Pyu, Clr, 0.38id 0.62od 012.0l (611254)	1
	10	222375	(00000000-)	Fitting, Plstc, Str, Bm06/Bm08	1
	11	54333	(00000000-)	Clamp, Hose, Wormdrive, 0.31- 0.88d, .31w	6
	12	613531	(00000000-)	Hose, Pvc, Clr, 0.50id 0.75od 045.0l (611259)	1
	13	1047895	(00000000- 10711514)	Bracket, Mount, Filter	1
∇	14	1047752	(00000000-)	Filter, In- Line, Bm08/Bm08	1
▲	14	613992	(00000000-)	Gasket [Viton, F/1005302]	1
▲	14	1005304	(00000000-)	Screen, Fltr, 80 Mesh, Ss	1
▲	14	613991	(00000000-)	Bowl, Clr, Short, F/1005302	1
	15	130773	(00000000-)	Tie, Cable, Nyl, 11.0l, .14w, 3.0 Max. D	2
	16	1048278	(00000000-)	Hose, Pvc, Clr E90 0.63id 0.75od	1
	17	1017532	(00000000-)	Fitting, Plstc, E90, Bm08/Pm06	1
	18	1213803	(10729457-)	Valve, Water, Solenoid, 24vdc, Bm10/Bm10	1
∇	18	1062385	(00000000- 10729456)	Valve, Water, Solenoid, 24vdc Bm10/Bm10	1
▲	18	614265	(00000000- 10729456)	Valve Kit, Water [Viton Diaphram]	1
	19	01684	(00000000-)	Washer, Flat, 0.27b 0.69d .05, Ss	2
	20	08712	(00000000-)	Nut, Hex, Lock, M6 X 1.00, Nl, Ss	2
	21	20634	(00000000-)	Screw, Set, Soc, 10- 24 X 0.25, Nl	2
	22	601472	(00000000-)	Coupling [5100]	1
	23	1041011	(00000000-)	Rod, Valve, Water	1
	24	1014156	(00000000-)	Label, Opertnl, Lower, Soltn Flow	1
	25	1017091	(00000000-)	Spring, Cmpr, 0.50od .04wir 00.8l	1
	26	626121	(00000000-)	Knob, Rnd, 0.72d 0.78l 0.25b, Plstc	1
	27	1043670	(00000000- 10711514)	Bracket, Hanger, Sqge (NLA Replaced By Kit 9013299 - See Item #2)	1
	28	1044327	(00000000- 10711514)	Nut, Hex, M6 X 1.00 X 31l (NLA Replaced By Kit 9013299 - See Item #2)	1

∇ ASSEMBLY

▲ INCLUDED IN ASSEMBLY

ON- BOARD BATTERY CHARGER GROUP

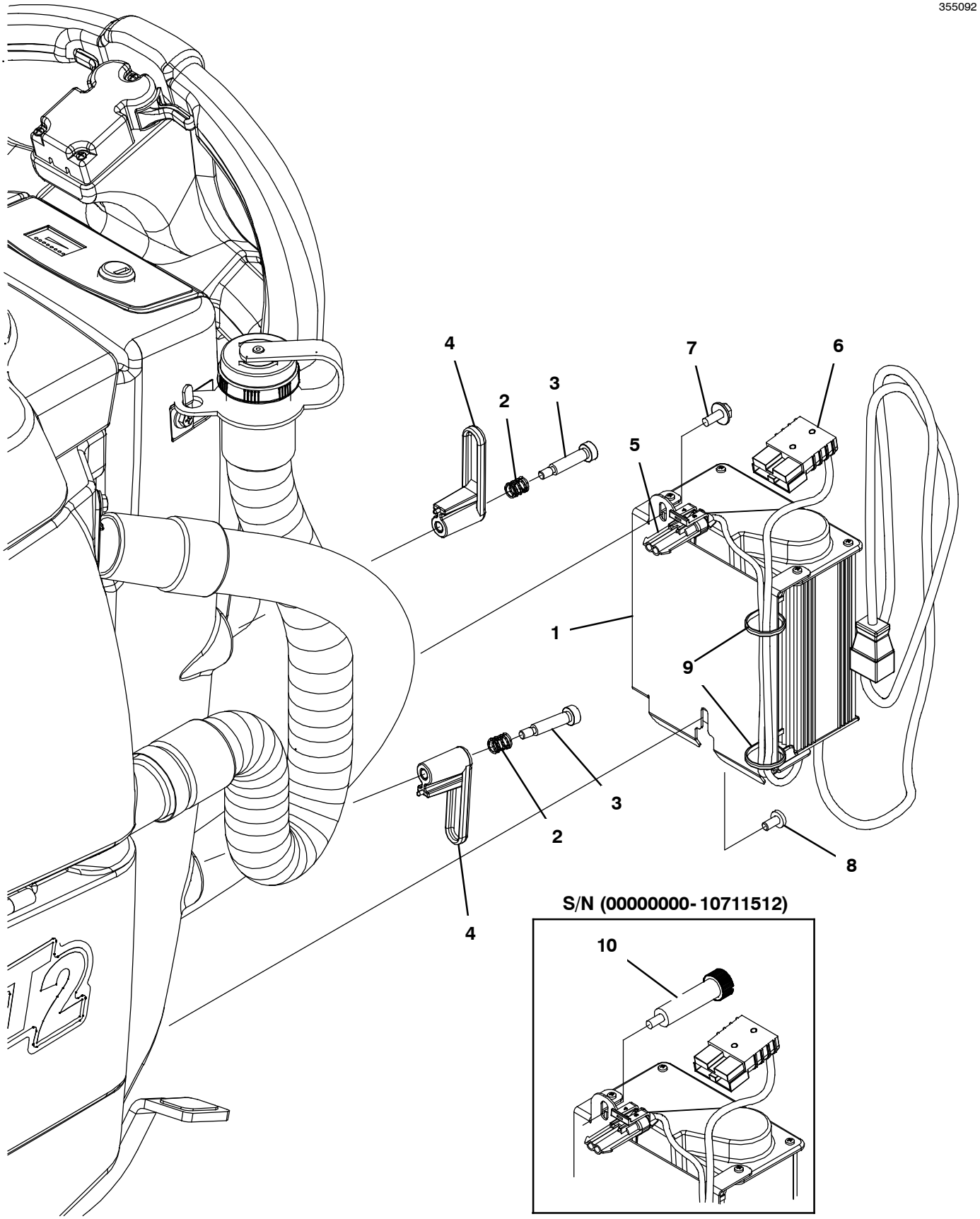

ON- BOARD BATTERY CHARGER GROUP

	Ref.	Part No.	Serial Number	Description	Qty.
∇	1	9008724	(00000000-)	Charger Kit, Onboard, Na [T2]	1
▲	2	611311	(00000000-)	Spring, Cmpr, 0.40od .05wir 00.5l, Pl,Mw	2
▲	3	1024965	(00000000-)	Bolt, Shld, 08mmd X 030mm, M06 X 1.0	2
▲	4	610906	(00000000-)	Hook, Cord [Viper]	2
▲	5	1020021	(00000000-)	Connector, Cap, Superseal 1.5, Replmt	1
▲	5	1020020	(00000000-)	Seal, Cable, Superseal 1.5, Replmt [Tt]	1
▲	5	1020050	(00000000-)	Receptacle, Superseal 1.5, Replmt [Tt]	1
▲	6	605387	(00000000-)	Connector, Anderson, 50a,Red W/O Contact	1
▲	7	1034731	(10711513-)	Screw, Hex, M6 X 1.00 X 16, Sems, Ss	1
▲	8	74027	(00000000-)	Screw, Pan, Phl, M6 X 1.00 X 12, Nl, Pl	1
▲	9	130773	(00000000-)	Tie, Cable, Nyl, 11.0l, .14w, 3.0 Max. D	2
	10	1044167	(00000000- 10711512)	Knob, Rnd, 19.0d M6 X 50 (Replaced by 1034731 Qty 1)	1
	N/S	1044067	(00000000-)	Cord, Power, 16/3 Blk [2.5meter, Na]	1

∇ ASSEMBLY

▲ INCLUDED IN ASSEMBLY

BATTERY GROUP, WET 12V/105Ah

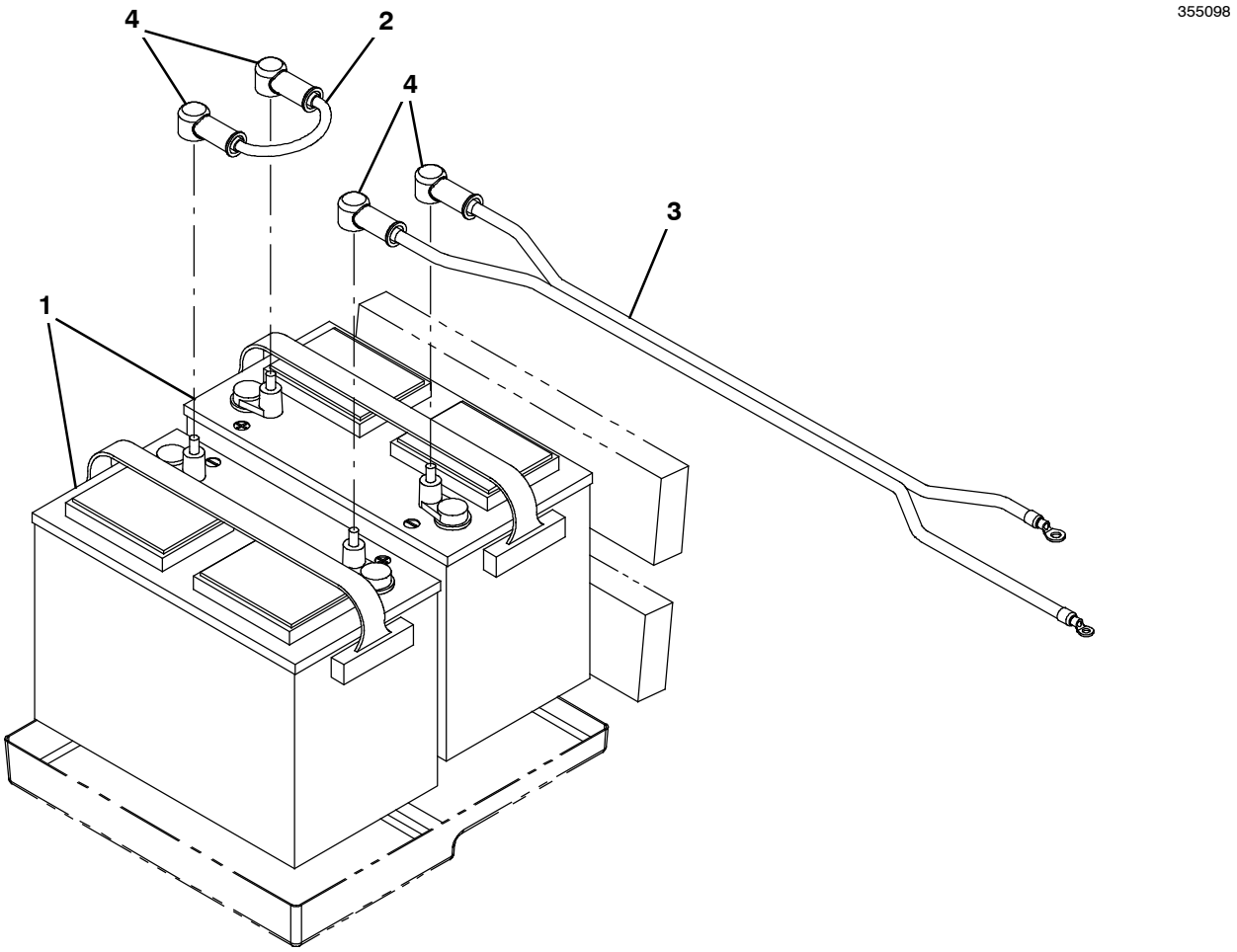

Ref.	Part No.	Serial Number	Description	Qty.
1	578426	(00000000-)	Battery, 12vdc 0105ah 0530cca [27tmx]	2
2	130364	(00000000-)	Cable, 06ga 15.0l Blk .31ring /.38ring	1
3	1046612	(00000000-)	Harness, Battery [T2 U.S.]	1
4	611221	(00000000-)	Boot, Terminal, Battery, 25.4mm, Blk	4

BATTERY GROUP, GEL 12V/102Ah

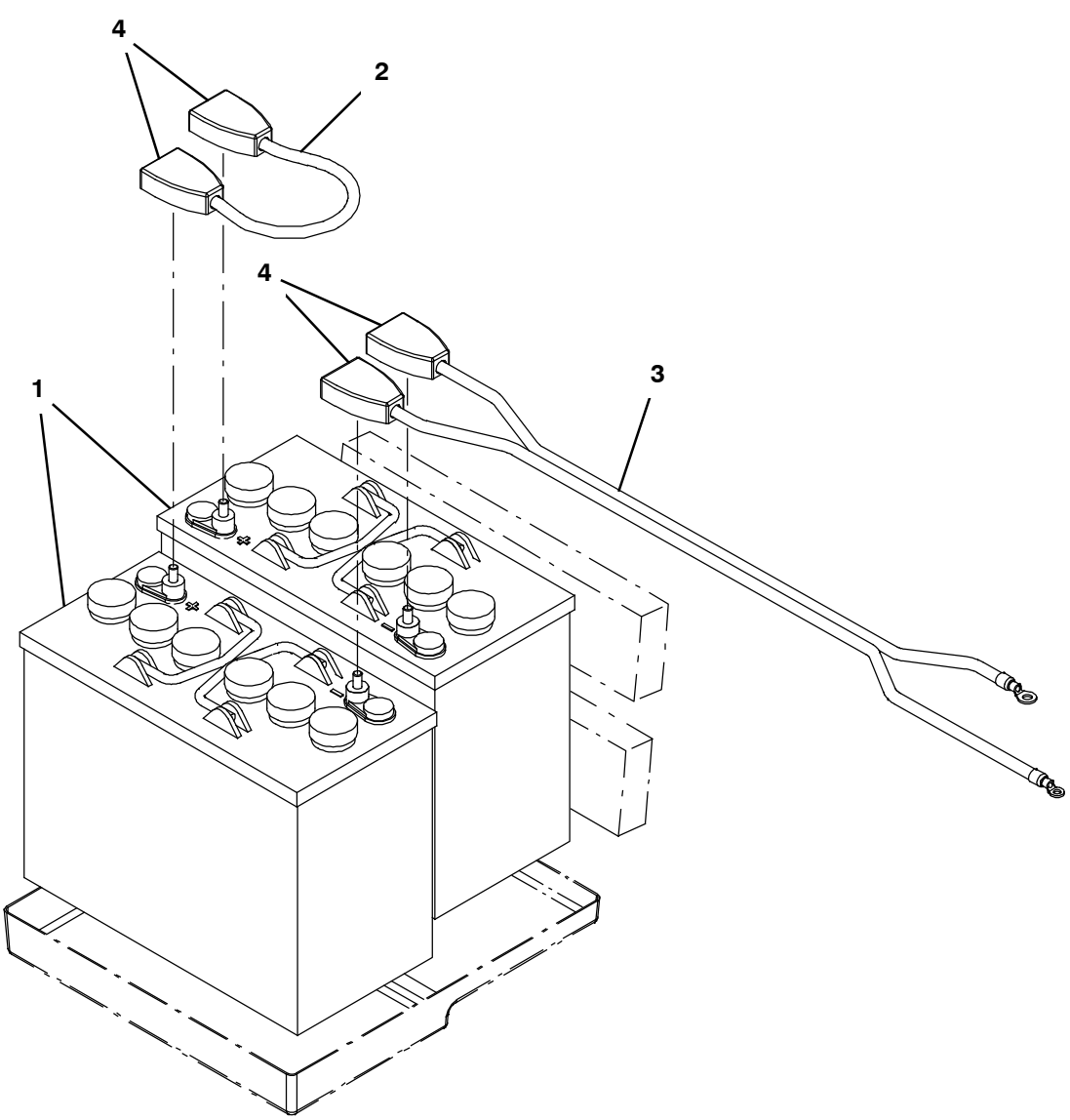

Ref.	Part No.	Serial Number	Description	Qty.
1	1071125	(00000000-)	Battery, Gel, 12vdc 0102ah [Trjn 31- Gel]	2
2	130364	(00000000-)	Cable, 06ga 15.0l Blk .31ring /.38ring	1
3	1046612	(00000000-)	Harness, Battery [T2 U.S.]	1
4	68872	(00000000-)	Boot, Terminal, Battery, 02- 01ga, Blk	4

ELECTRICAL DIAGRAM

355166

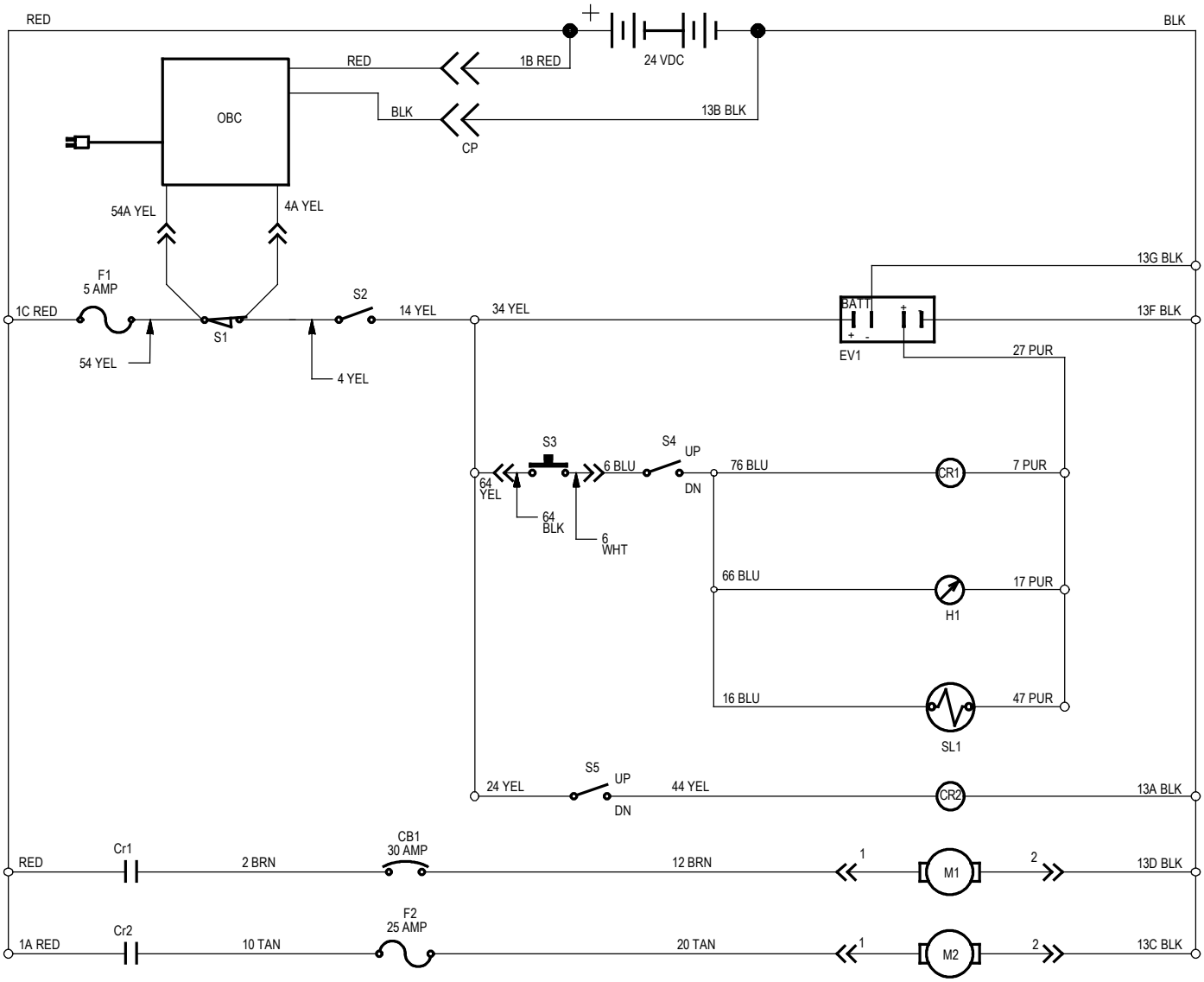

LEGEND

RED	=	RED
BLK	=	BLACK
BRN	=	BROWN
BLU	=	BLUE
TAN	=	TAN
YEL	=	YELLOW
PUR	=	PURPLE
CB1	=	CIRCUIT BREAKER 30A
CP	=	CHARGER PLUG
CR1	=	RELAY BRUSH
CR2	=	RELAY VACUUM FAN
Cr1	=	CONTACT RELAY
Cr2	=	CONTACT RELAY
EV1	=	ELECTRONIC VOLT METER
F1	=	FUSE 5A MAIN
F2	=	FUSE 25A VAC FAN
H1	=	METER HOUR
M1	=	MOTOR BRUSH
M2	=	MOTOR VACUUM FAN
OBC	=	ON BOARD CHARGER
S1	=	SWITCH CHARGER SAFETY
S2	=	SWITCH KEY
S3	=	SWITCH SCRUB
S4	=	SWITCH SCRUB HEAD POSITION
S5	=	SWITCH VACUUM
SL1	=	SOLUTION VALVE

WIRING HARNESS

355165

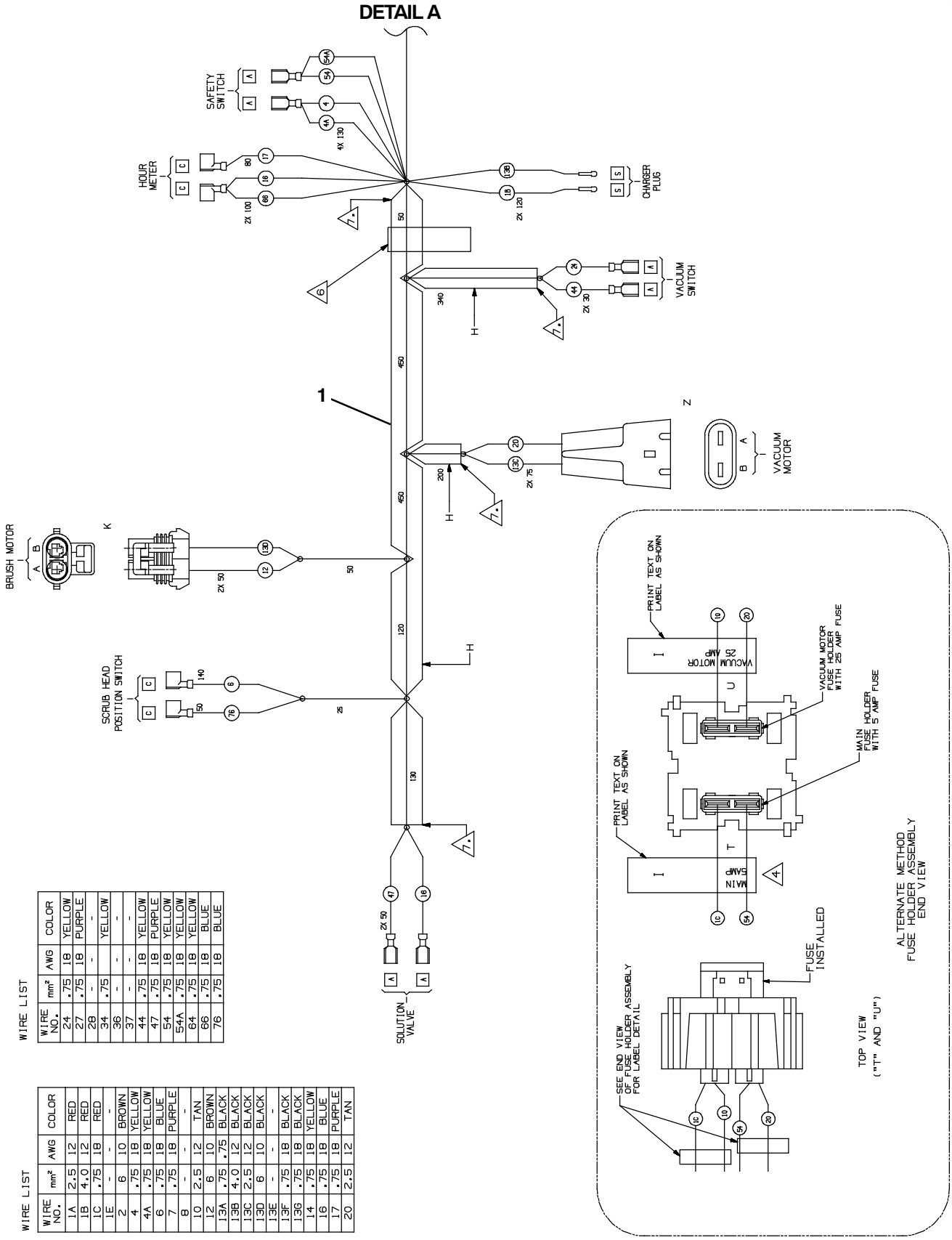

WIRE LIST

WIRE NO.	mm²	AWG	COLOR
1A	2.5	12	RED
1B	4.0	12	RED
1C	.75	18	RED
1E	-	-	-
2	6	10	BROWN
4	.75	18	YELLOW
4A	.75	18	YELLOW
6	.75	18	BLUE
7	.75	18	PURPLE
8	-	-	-
10	2.5	12	TAN
12	6	10	BROWN
13A	.75	.75	BLACK
13B	4.0	12	BLACK
13C	2.5	12	BLACK
13D	6	10	BLACK
13E	-	-	-
13F	.75	18	BLACK
13G	.75	18	BLACK
14	.75	18	YELLOW
16	.75	18	BLUE
17	.75	18	PURPLE
20	2.5	12	TAN

WIRE LIST

WIRE NO.	mm²	AWG	COLOR
24	.75	18	YELLOW
27	.75	18	PURPLE
28	-	-	-
34	.75	-	YELLOW
36	-	-	-
37	-	-	-
44	.75	18	YELLOW
47	.75	18	PURPLE
54	.75	18	YELLOW
54A	.75	18	YELLOW
64	.75	18	BLUE
66	.75	18	BLUE
76	.75	18	BLUE

WIRING HARNESS

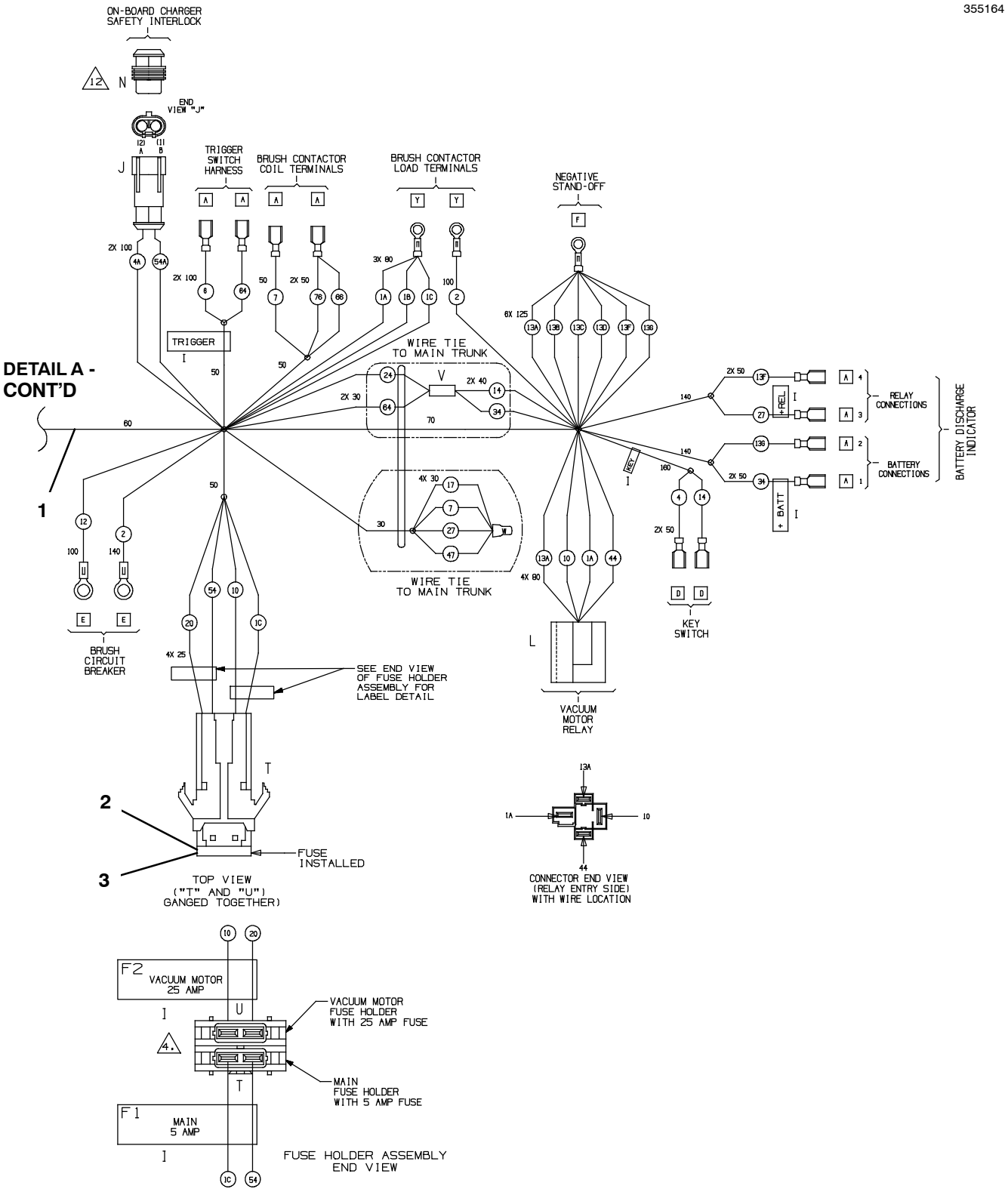

	Ref.	Part No.	Serial Number	Description	Qty.
∇	1	1067677	(00000000-)	Harness, Main [T2]	1
▲	2	1016040	(00000000-)	Fuse, Blade, 025a, 32vdc	1
▲	3	1016029	(00000000-)	Fuse, Blade, 005a, 32vdc [Atof]	1

PARKING BRAKE GROUP

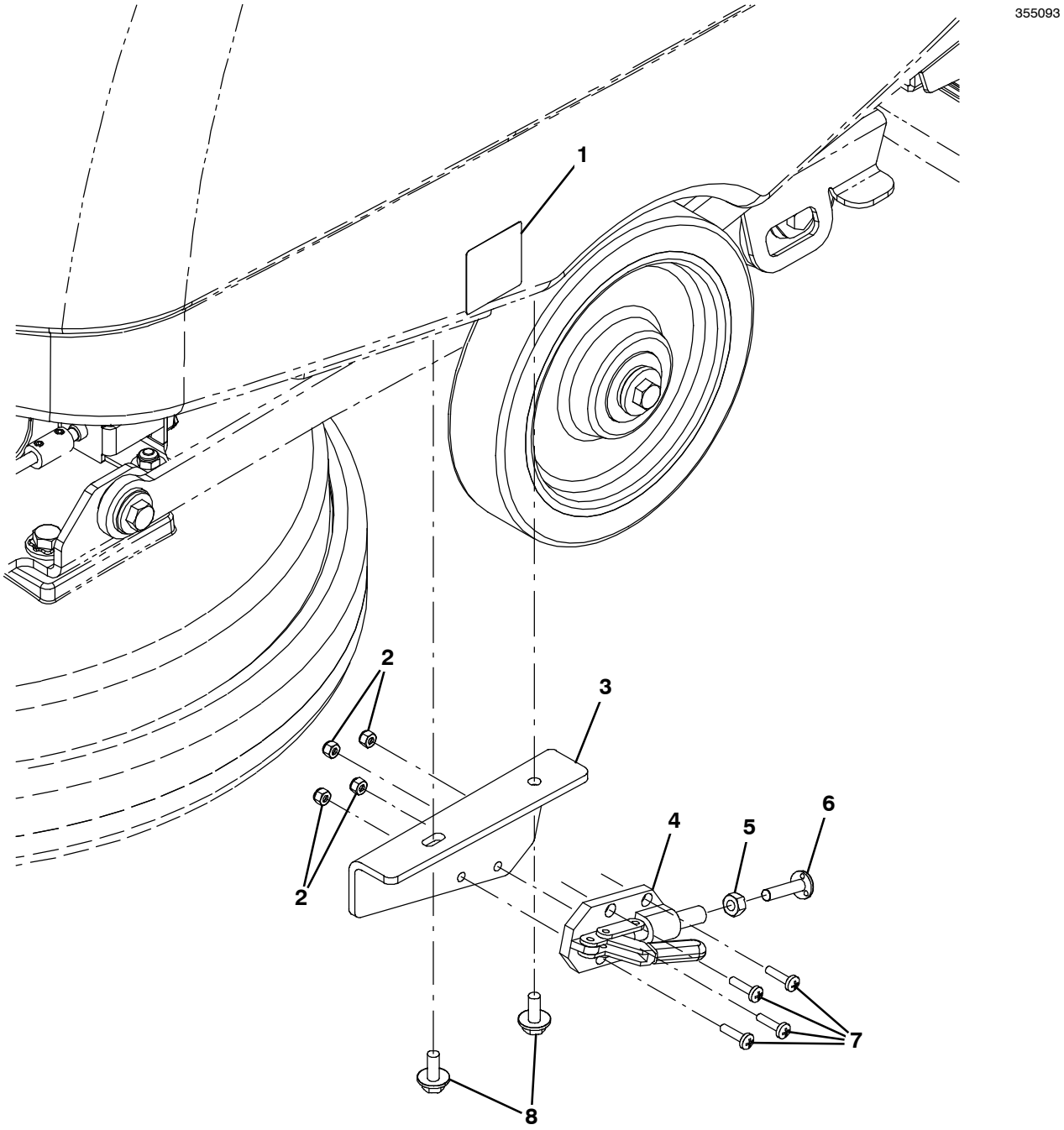

PARKING BRAKE GROUP

	Ref.	Part No.	Serial Number	Description	Qty.
∇		9004855	(00000000-)	Parking Brake Kit [T2]	1
▲	1	600624	(00000000-)	Label, Parking Brake, Symbol [Tnv]	1
▲	2	33932	(00000000-)	Nut, Hex, Lock, M4 X 0.70, Nl, Ss	4
▲	3	1042770	(00000000-)	Bracket, Mtg, Brake	1
▲	4	1013718	(00000000-)	Clamp, Brake, Parking [T3]	1
▲	5	07785	(00000000-)	Nut, Hex, Std, M6 X 1.00, Ss	1
▲	6	1017416	(00000000-)	Screw, Weld, M6 X 1.00 X 25, Thru, Ss	1
▲	7	24265	(00000000-)	Screw, Pan, Phl, M4 X 0.70 X 16, Ss	4
▲	8	1034731	(00000000-)	Screw, Hex, M6 X 1.00 X 16, Ss, Sems	2

∇ ASSEMBLY

▲ INCLUDED IN ASSEMBLY

DOCUMENTATION GROUP

Ref.	Part No.	Serial Number	Description	Qty.
	9008845	(00000000-)	Manual, Parts [T2, Na]	1
	9008844	(00000000-)	Manual, Oprtr [T2, En/Es/Fr, Na]	1
	9008934	(00000000-)	Instr, Use & Care, Wall Chart [T2, Na]	1

To view, print, order, download the latest Parts manual, other language Operator manuals, and Use and Care Guides (wall charts), visit:

www.tennantco.com/manuals