800
(Gas/LPG)

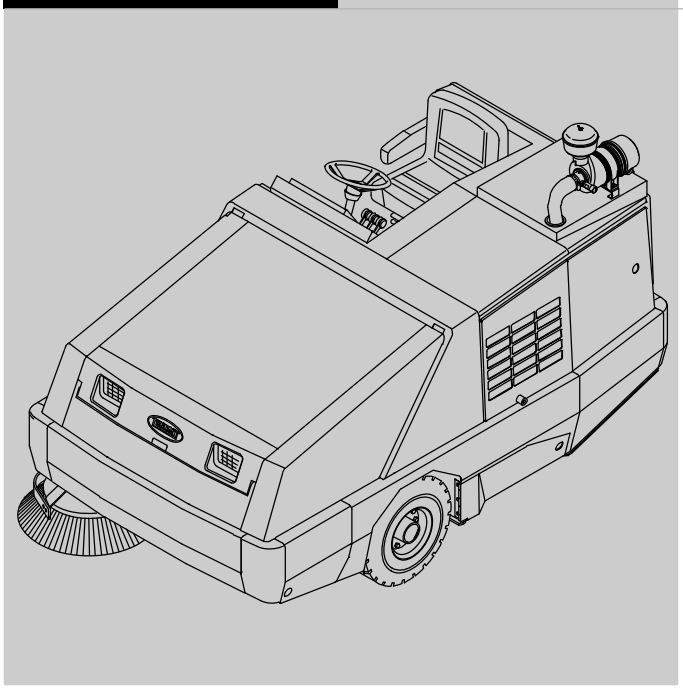

(S/N 008467–)
Sweeper
Parts Manual

Global

For the latest Parts manuals and other language Operator manuals, visit:

www.tennantco.com/manuals

9016586
Rev. 04 (9-2023)

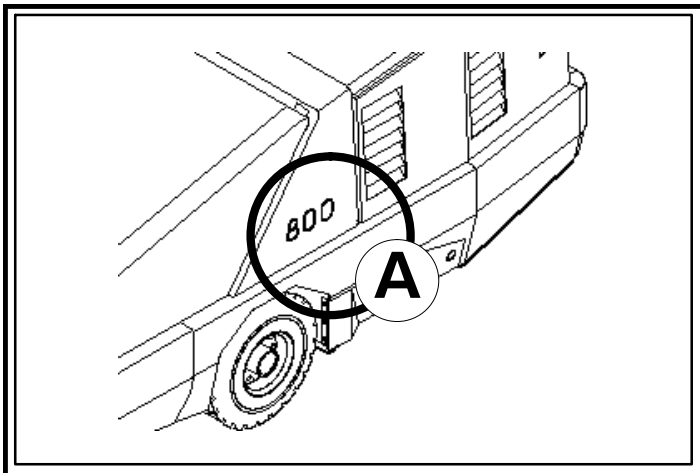

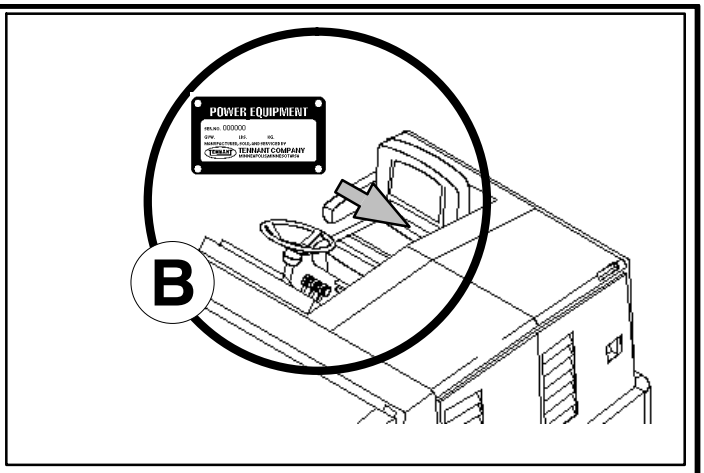

Ref	Part No.	Serial Number	Description	Qty.
1	82681	(000000–)	Bracket Wldt, Lpg Mount	1
▽ 2	63810	(000000–)	Latch Assy, Lpg Tank Mtg, W/Nut	4
▲ 3	51839	(000000–)	Nut Adjustable, Lpg Tank Mtg	2
4	49263	(000000–)	Tie, Cable	3
5	82556	(000000–001039)	Bracket, Vaporizer	1
6	54930	(000000–)	Vaporizer, LPG	1

D

C

EN

HOW TO ORDER PARTS – See diagram above

Only use TENNANT Company supplied or equivalent parts. Parts and supplies may be ordered online, by phone, by fax or by mail.

Follow the steps below to ensure prompt delivery.

1. **(A)** Identify the machine model.
2. **(B)** Identify the machine serial number from the data plate.
3. **(C)** Ensure the proper serial number is used from the parts list.
4. Identify the part number and quantity. Do not order by page or reference numbers.
5. Provide your name, company name, customer ID number, billing and shipping address, phone number and purchase order number.
6. Provide detail shipping instructions.

(D) ▽ – Identifies an assembly
▲ – Identifies parts included in assembly

Please fill out at time of installation for future reference.

Model No. – _____

Serial No. – _____

Machine Options – _____

Sales Rep. – _____

Sales Rep. phone no. – _____

Customer ID Number – _____

Installation Date – _____

Tennant Company
10400 Clean Street
Eden Prairie, MN 55344–2650
Phone: (800) 553–8033
www.tennantco.com

II Speed and Thermo–Sentry, are US trademarks of Tennant Company.

Specifications and parts are subject to change without notice.

Original Information, copyright © 2017, 2018, 2019, 2023 TENNANT Company, Printed in U.S.A.

CN

如何订购部件 – 参见下表

仅使用 TENNANT 公司提供的或同等部件。部件和供应可以在线订购，通过电话、传真或邮件订购。
请遵循下面的步骤确保及时交付。

1. **(A)** 确定机器型号。
2. **(B)** 从数据标签确定机器序列号。
3. **(C)** 确保使用部件列表中的正确序列号。
4. 确定部件号和数量。
   不要按页面或参考编号订购。
5. 提供您的姓名、公司名称、客户 ID 号、付帐和送货地址、
   电话号码和采购单编号。
6. 提供详细的送货说明。

(D) ▽ – 确定组件
▲ – 确定组件中包含的组件

请在安装时填写供未来参考。

型号 – _____

序列号 – _____

机器选项 – _____

销售代表- _____

销售代表电话号码 – _____

客户 ID 编号 – _____

安装日期 – _____

ES

CÓMO SOLICITAR PIEZAS – Consulte el diagrama anterior.

Utilice sólo las piezas suministradas por TENNANT Company o piezas equivalentes. Puede solicitar las piezas a través de internet, por teléfono, por fax o por correo.

Siga los siguientes pasos para que la entrega sea rápida.

1. **(A)** Indique el modelo de máquina.
2. **(B)** Indique el número de serie de la etiqueta de datos.
3. **(C)** Asegúrese de que indica el número de serie correcto de la lista de piezas.
4. Indique la cantidad y el número de la pieza.
   No realice el pedidoindicando el número de página o el de referencia.
5. Incluya su nombre, el nombre de la empresa, el ID de cliente,
   las direcciones de envío y facturación, el número de teléfono y el número del pedido de compra.
6. Facilite instrucciones de envío.

(D) ▽ – identifica un conjunto
▲ – identifica piezas de un conjunto

Rellene estos datos cuando realice la instalación para utilizarlos como referencia en el futuro.

Nº modelo – _____

Nº serie – _____

Opciones de la máquina – _____

Vendedor – _____

Nº teléfono vendedor – _____

Nº cliente – _____

Fecha de instalación – _____

FR

COMMENT COMMANDER DES PIÈCES DÉTACHÉES – Voir le schéma ci-dessus.

Utilisez uniquement des pièces fournies par la société TENNANT ou équivalentes. Les pièces et fournitures peuvent être commandées en ligne, par téléphone, fax, ou par courrier.

Suivez les étapes ci-dessous pour assurer une livraison rapide.

1. **(A)** Identifiez le modèle de la machine.
2. **(B)** Identifiez le numéro de série de la machine, à partir de l'étiquette signalétique.
3. **(C)** Assurez-vous que le numéro de série correct est utilisé à partir de la liste de pièces détachées.
4. Identifiez le numéro de pièce et la quantité. Ne commandez pas par page ou numéros de référence.
5. Fournissez votre nom, le nom de votre société, votre numéro d'identification de client, l'adresse de facturation et d'expédition, le numéro de téléphone et le numéro du bon de commande.
6. Fournissez des instructions d'expédition détaillées.

(D) ▽ – identifie un assemblage
▲ – identifie les pièces composant l'assemblage

A remplir au moment de l'installation à titre de référence.

Nº du modèle – _____

Nº de série – _____

Options de la machine – _____

Agent commercial – _____

Nº tél. de l'agent commercial – _____

Numéro d'identification client – _____

Date d'installation – _____

JP

パーツの発注方法 ?上記の図を参照してください

TENNANT社製のパーツまたは同等品のみをお使いください。
パーツやサプライ品のご注文は、オンライン、電話、FAX、または手紙でお願いいたします。
確実にお届けできるように、以下の情報お知らせください。

1. **(A)** 製品のモデル名をお知らせください。
2. **(B)** 製品のデータラベルに印刷されているシリアル番号
   をお知らせください。
3. **(C)** パーツリストを参照して、シリアル番号が正しいかご確認
   ください。
4. パーツ番号と数量をお知らせください。マニュアル/カタログの
   ページ番号や参照番号でのご注文はご遠慮ください。
5. お客様のお名前、会社名、顧客ID番号、請求/発送先住所、
   電話番号、注文書番号をお知らせください。
6. 発送に関するご希望があれば、明記してください。

(D) ▽ – アセンブリを示します
▲ – アセンブリに含まれるパーツを示します

後日確認できるように、設置時に記入してください。

モデルNo. – _____

シリアルNo. – _____

製品のオプション– _____

販売代理店 – _____

販売代理店の電話番号 – _____

顧客ID番号 – _____

設置日 – _____

G/LP

General Recommended Maintenance Items

	Ref.	Part No.	Serial Number		Description	Qty.
▽		77632	(008467–	)	Maintenance Kit, Skirts	1
▲		73870	(008467–	)	Skirt, Brush Door	2
▲		64788	(008467–	)	Skirt, Brush Door	2
▲		70453	(008467–	)	Strip, Retainer, Skirt	2
▲		62955	(008467–	)	Skirt, Seal, Main Brush	1
▲		62957	(008467–	)	Channel, Retainer, Seal, Rear	1
▲		62954	(008467–	)	Blade, Deflector	1
▲		62956	(008467–	)	Strap, Retainer, Seal	1
▲		43500	(008467–	)	Chain, Link#2/0, 7Links	1
▽		79032	(008467–	)	Maintenance Kit, Skirts 800	1
▲		64919	(008467–	)	Seal, Pan, Top	1
▲		64920	(008467–	)	Channel, Retainer	1
▲		73654	(008467–	)	Seal, Brush Comp, Side	2
▲		73888	(008467–	)	Skirt, Front, Indoor	2
▽		77634	(008467–	)	Maintenance Kit, 800HR 800/810	1
▲		34306	(008467–	)	Breather, Hyd 40Mic NO DS	1
▲		31613	(008467–	)	Strainer–Hyd Suction 25–100–03	1
▲		65221	(008467–	)	Element, Fltr, Hyd Oil	1
▲		1057711	(008467–	)	Oil, Hyd [El, Iso 100, 05gal]	3
		1057710	(008467–	)	Oil, Hyd [El, Iso 100, 01gal]	1
		1057707	(008467–	)	Oil, Hyd [El, Iso 32, 01gal]	1
		1057708	(008467–	)	Oil, Hyd [El, Iso 32, 05gal]	1
		372652	(008467–	)	Element, Fltr, Air [Dn]	1
		372651	(008467–	)	Element, Fltr, Air	1
		16411	(008467–	)	Paint, Airdry, Off–White, 12oz	1
		16412	(008467–	)	Paint, Airdry, Teal, 12oz, Solid	1
		377540	(008467–	)	Paint, Airdry, Blk, 12oz	1
		377538	(008467–	)	Paint, Airdry, Gray, 12oz	1
		377537	(008467–	)	Paint, Airdry, Iron Gray, 12oz	1

SECTION 2

Contents **Page**

Fig. 1 – Brushes, Replacement 2-2
Fig. 2 – Main Frame Skirt and Seals Group . 2-4
Fig. 3 – Brush Door Group, Left 2-6
Fig. 4 – Brush Door Group, Right 2-8
Fig. 5 – Operator Station Group 2-10
Fig. 6 – Seat Group 2-12
Fig. 7 – Engine Cover Group, Top 2-14
Fig. 8 – Engine Cover Group, Rear 2-16
Fig. 9 – Engine Cover Group, Side 2-18
Fig. 10 – Instrument Panel and Brush Lift Switch Group 2-20
Fig. 11 – Circuit Breaker and Relay Group . 2-22
Fig. 12 – Steering Group 2-24
Fig. 13 – Engine and Mount Group, Gas . . . 2-26
Fig. 14 – Engine and Mount Group, LPG . . 2-28
Fig. 15 – Engine Air Cleaner Group, Gas . . 2-30
Fig. 16 – Engine Air Cleaner Group, LPG . . 2-32
Fig. 17 – Engine Alternator Group 2-34
Fig. 18 – Engine Muffler Group 2-36
Fig. 19 – Engine Fuel Tank Group, Gas . . . 2-38
Fig. 20 – Engine Fuel Tank Group, LPG . . . 2-40
Fig. 21 – Engine Radiator Mount Group . . . 2-42
Fig. 22 – Engine Radiator Hose Group 2-44
Fig. 23 – Engine Radiator Cooling Fan Group2-46
Fig. 24 – Engine Battery Group 2-48
Fig. 25 – Wheel Group, Rear Drive 2-50
Fig. 26 – Wheels and Brakes Group, Front . 2-52
Fig. 27 – Wheel Assembly 2-54
Fig. 28 – Brake Pedals Group 2-56
Fig. 29 – Directional Pedal Group 2-58
Fig. 30 – Hopper Lift Arms Group 2-60
Fig. 31 – Hopper Lift Cylinders Group 2-62
Fig. 32 – Hopper Group 2-64
Fig. 33 – Hopper Door Group 2-66
Fig. 34 – Hopper Cover Group 2-68
Fig. 35 – Hopper Bumper Group 2-70
Fig. 36 – Hopper Filter Shaker Group 2-72
Fig. 37 – Hopper Pressure Switch Group . . 2-74
Fig. 38 – Hydraulic Pumps Group 2-76
Fig. 39 – Hydraulic Schematic 2-78
Fig. 40 – Hydraulic Hose Group 2-80
Fig. 41 – Hydraulic Reservoir Group 2-82
Fig. 42 – Hydraulic Filter Group 2-84
Fig. 43 – Hydraulic Solenoid Valve Group . . 2-86
Fig. 44 – Hydraulic Lift Valve Group 2-88
Fig. 45 – Side Brush Motor Group 2-90
Fig. 46 – Side Brush Pivot Group 2-92
Fig. 47 – Side Brush Lift Group 2-94
Fig. 48 – Side Brush Hydraulic Solenoid Valve Group 2-96
Fig. 49 – Main Brush Drive Group 2-98
Fig. 50 – Main Brush Lift Group 2-100
Fig. 51 – Main Brush Adjustment Group . . 2-102
Fig. 52 – Vacuum Fan Impeller Group 2-104
Fig. 53 – Vacuum Fan Motor Group 2-106

Contents **Page**

Fig. 54 – Electrical Schematic 2-108
Fig. 55 – Wire Harness Group, Main 2-112
Fig. 56 – Wire Harness Group, Gas Engine Harness 2-117
Fig. 57 – Wire Harness Group, LPG Engine Harness 2-118
Fig. 58 – Wire Harness Group, Gas/LPG Engine Adapter Harness 2-120
Fig. 59 – Electrical Schematic, Gas Engine Harness 2-122
Fig. 60 – Electrical Schematic, LPG Engine Harness 2-124
Fig. 61 – Wire Harness Group, Hopper . . . 2-126
Fig. 62 – Wire Harness Group, Tail Lights . 2-127
Fig. 63 – Label Group 2-128

Fig. 1 – Brushes, Replacement

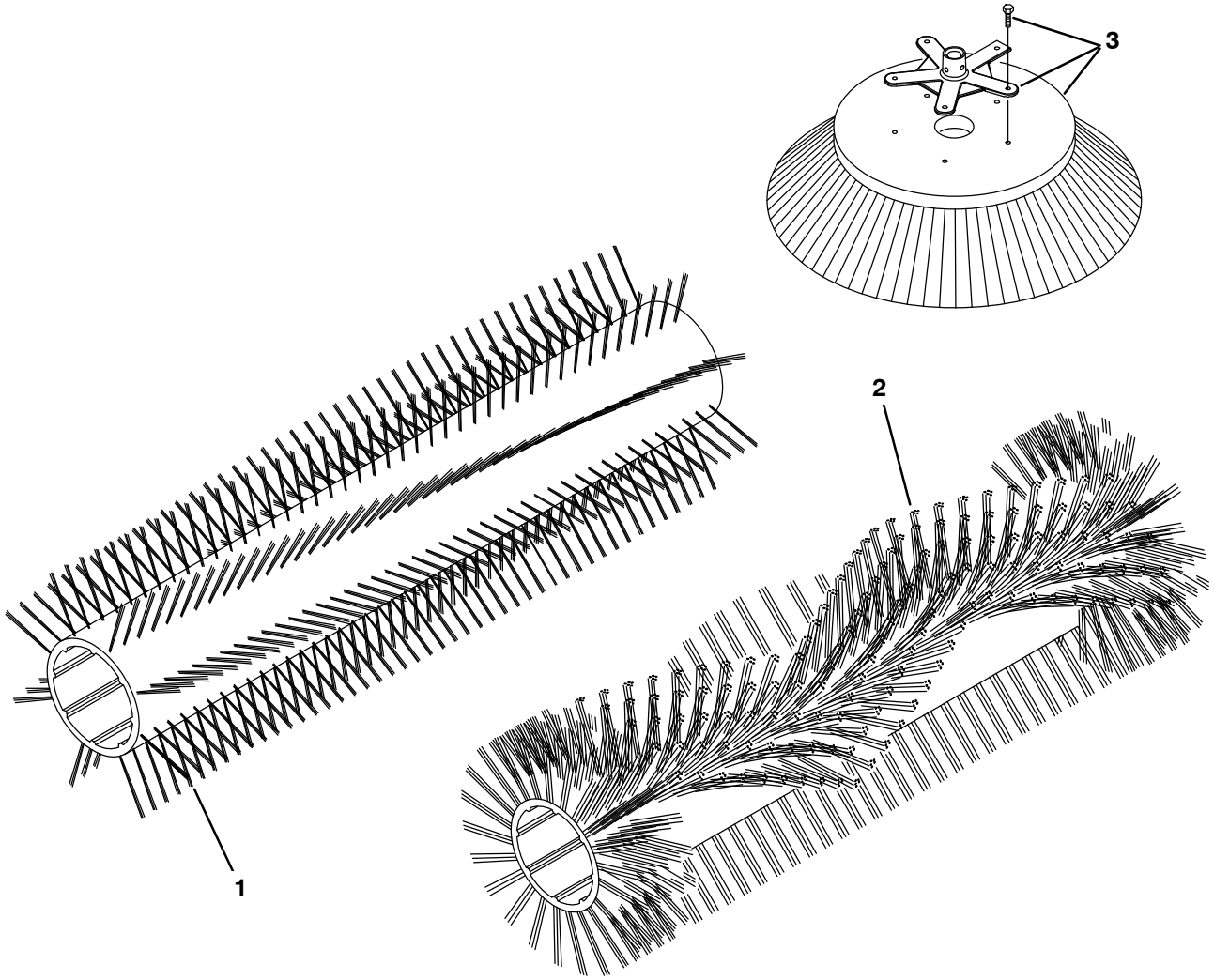

07628 – 800

Fig. 1 – Brushes, Replacement

	Ref.	Part No.	Serial Number	Description	Qty.
	1	35326	(008467–)	Brush, Swp, 50L, 08Dr, Polypropylene, Spiral	1
	1	35324	(008467–)	Brush, Swp, 50L, 08Dr, Polypropylene/Wire, Spiral	1
	1	35327	(008467–)	Brush, Swp, 50L, 08Dr, Wire, Spiral	1
	1	35325	(008467–)	Brush, Swp, 50L, 08Dr, Polypropylene, Spiral	1
	1	35336	(008467–)	Brush, Swp, 50L, 04Qr, Nylon, Spiral	1
	1	35323	(008467–)	Brush, Swp, 50L, 24Sr, Nylon	1
	1	66020	(008467–)	Brush, Swp, 50L, 08Dr, Nylon, Spiral	1
	2	370011	(008467–)	Brush, Swp, Wedge, Polypropylene	1
▽	3	75011	(008467–)	Brush–Side Swp –Assy–Nylon	1
▲		51021N	(008467–)	Brush–Side Swp –Nylon	1
▲		1042969	(008467–)	Hub, Drive, Brush, Side, 1.00b 8.8bc	1
▲		39394	(008467–)	Screw, Hex, .31–09 X 1.25, Wood	5
▽	3	75010	(008467–)	Brush–Side Swp –Assy–Flat Wire	1
▲		51542	(008467–)	Brush–Side Swp –Flat Wire	1
▲		1042969	(008467–)	Hub, Drive, Brush, Side, 1.00b 8.8bc	1
▲		39394	(008467–)	Screw, Hex, .31–09 X 1.25, Wood	5
▽	3	70649	(008467–)	Brush–Side Swp –Assy–Polypropylene	1
▲		70538	(008467–)	Brush–Side Swp –Polypropylene	1
▲		1042969	(008467–)	Hub, Drive, Brush, Side, 1.00b 8.8bc	1
▲		39394	(008467–)	Screw, Hex, .31–09 X 1.25, Wood	5

Fig. 2 – Main Frame Skirt and Seals Group

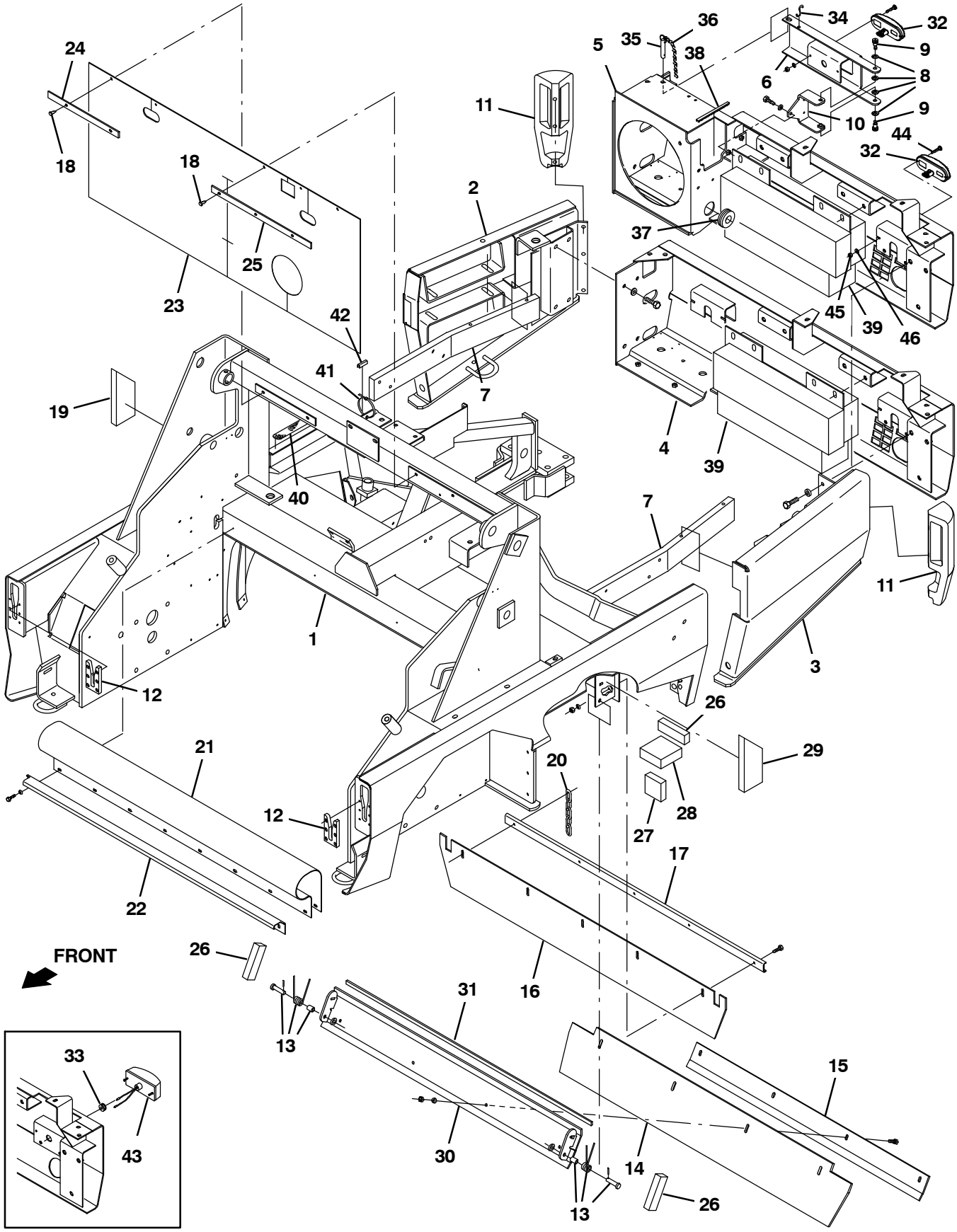

09800 – G,LP

Fig. 2 – Main Frame Skirt and Seals Group

	Ref.	Part No.	Serial Number		Description	Qty.
	1	1073839	(008467–	)	Frame Wldt, Main [800l Gray]	1
	2	1073840	(008467–	)	Panel Wldt, Rear, Rh [800 Gray]	1
	3	1073838	(008467–	)	Panel Wldt, Rear, Lh [800 Gray]	1
	4	1073805	(008467–	)	Bumper Wldt, Rear, Gas/Dsl [800 Gray]	1
	5	1073807	(008467–	)	Bumper Wldt, Rear, Lpg [800 Gray]	1
	6	77680	(008467–	)	Door, Bmpr, Lpg	1
	6	1073836	(008467–	)	Door, Bumper, Lpg [800 Gray]	1
	7	77593	(008467–	)	Bracket, Frame, 1.0 X 3.50w	2
	8	86860	(008467–	)	Washer, Thrust, 0.50b 0.87d 0.06w	4
	9	36758	(008467–	)	Bolt, Shld, .50d X 0.50, .38–16	2
	10	1073825	(008467–	)	Bracket, Hinge, Door, Lpg [800 Gray]	1
	11	1073814	(008467–	)	Bumper, Corner, Mach [800 Gray]	2
	12	63663	(008467–	)	Guide, Align, Bmpr, Pye	2
	13	69904	(008467–	)	Spring Assy Kit	1
	14	62954	(008467–	)	Skirt, Neo, .06, 08.00w 53.38l, 04/ Sl	1
	15	62956	(008467–	)	Retainer, Blade, Deflector	1
	16	62955	(008467–	)	Skirt, Neo, .18, 07.75w 54.75l, 05/ Sl	1
	17	62957	(008467–	)	Channel, .12, 1.5w 0.5 49.5l, 5/0.4h	1
	18	21168	(008467–	)	Plug, Hole, Rnd, 0.25h 0.8l, Brb, Nyl	5
	19	74066	(008467–	)	Insulation, Acstc, 1.0, 03.5 X 09.0 Cham	1
	20	43500	(008467–	)	Chain, Coil, Str, 2/0, 09.0l 07 Link	1
	21	64919	(008467–	)	Seal	1
	22	64920	(008467–	)	Retainer, Seal, Pan Top	1
	23	73724	(008467–	)	Shield, Dust, Front Firewall, Full	1
	24	70843	(008467–	)	Retainer, Shield, Dust, Rh	1
	25	70844	(008467–	)	Retainer, Shield, Dust, Lh	1
	26	74064	(008467–	)	Insulation, Acstc, 1.0, 01.5 X 04.0	4
	27	73863	(008467–	)	Insulation, Acstc, 1.0, 03.0 X 03.0	2
	28	73862	(008467–	)	Insulation, Acstc, 1.5, 04.0 X 04.0	2
	29	74067	(008467–	)	Insulation, Acstc, 1.0, 03.5 X 09.0 Cham	1
	30	73645	(008467–	)	Channel Wldt, Mtg	1
	31	79010	(008467–	)	Seal, Ure, 0.25, 0.50w 47.0l	1
	32	1076507	(008634–	)	Taillight, Led, Turn, Stop, Afmkt[800]	2
	33	87515	(008467–008633	)	Grommet, Rbr, 0.50id, F/0.8h, .25 Matl	2
	34	43363	(008467–	)	Hook, S, .13d 1.0l	1
	35	79608	(008467–	)	Pin, Hitch, .500d X 1.00l, Pl	1
	36	06121	(008467–	)	Chain, Sash, 35, 06.0l 11 Link	1
	37	74920	(008467–	)	Grommet, Flexible, .25 06.0l	1
	38	79670	(008467–	)	Grommet, Flexible, .25 24.0l	1
	39	79671	(008467–	)	Weight, Counter, Gas/Lpg	1
	40	86798	(008467–	)	Tread, Non–Skid, 01.4w 12.0l	1
	41	49263	(008467–	)	Tie, Cable, Nyl, 11.4l .19w 3.0 Max D	1
	42	361160	(008467–	)	Molding, Trim, Pvc, .08–.11 01.0l	1
▽	43	9018348	(008467–008633	)	Taillight Kit, Led, Replmt[800]	2
▲		45780	(008467–008633	)	Lamp, 12vdc, 0.5a, 04cp [#1157]	1
	44	06937	(008634–	)	Screw, Pan, Phl, M5 X 0.80 X 35, 4.8	4
	45	19066	(008634–	)	Washer, Flat, 0.25b 0.56d .05, Pl, 10	4
	46	06549	(008634–	)	Nut, Hex, M5 X 0.80 X 16, 8.8	4

Fig. 3 – Brush Door Group, Left

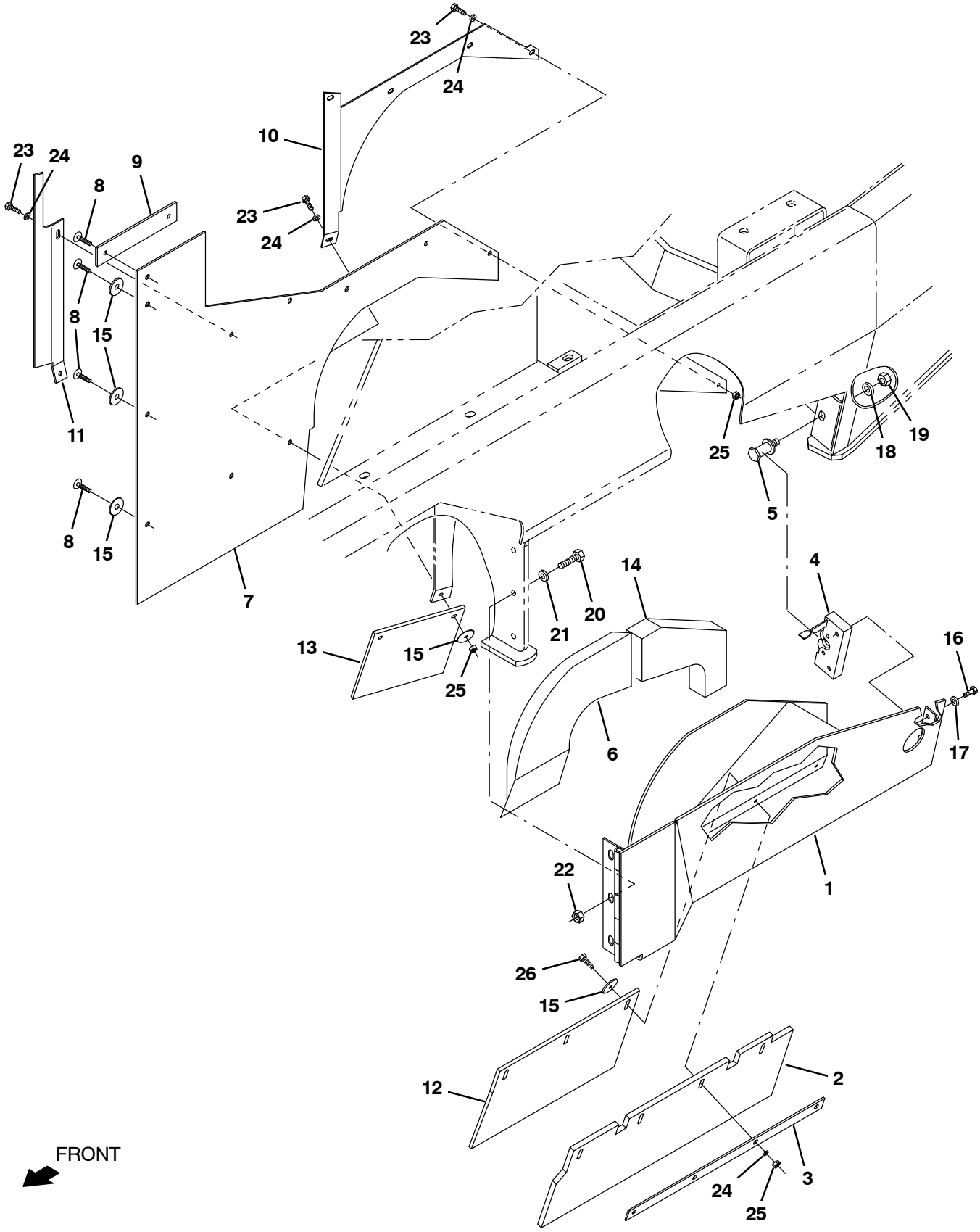

07583 – G, LP

Fig. 3 – Brush Door Group, Left

Ref.	Part No.	Serial Number	Description	Qty.
1	1073817	(008467–)	Door Wldt, Brush, Lh [800 Gray]	1
2	73870	(008467–)	Skirt, Neo, .37, 07.50w 21.75l, 04/ Sl	1
3	70453	(008467–)	Retainer, Skirt, .12, 1.0w X 18.5l, Blk	1
4	58489	(008467–)	Latch	1
5	58898	(008467–)	Bolt, Latch, F/58489/58844	1
6	70809	(008467–)	Seal, Rbr, Clsd, 1.62, Door, Brush, Lh	1
7	73654	(008467–)	Seal, Brush, Side, Complt [800l]	1
8	21168	(008467–)	Plug, Hole, Rnd, 0.25h 0.8l, Brb, Nyl	5
9	21282	(008467–)	Retainer, Skirt, .08, 1.5w X 07.5l	1
10	70597	(008467–)	Retainer, Skirt, .07	1
11	73648	(008467–)	Retainer, Skirt, .12, 1.2w X 15.7l	1
12	64788	(008467–)	Skirt, Rbr, .25, 07.84w 13.50l, 03/ Sl	1
13	73888	(008467–)	Skirt, Rbr, .25, 07.45w 06.37l, 02/ Hole	1
14	74062	(008467–)	Insulation, Acstc, 1.5, 07.8 X 08.0 Ntch	1
15	41178	(008467–)	Washer, Flat, 0.25, Fendr	9
16	34323	(008467–)	Screw, Hex, .25–20 X 0.75, Nl	2
17	41185	(008467–)	Washer, Flat, Belleville, .25	2
18	39346	(008467–)	Washer, Flat, 0.44, Std	1
19	43955	(008467–)	Nut, Hex, Std, .44–14, 5	1
20	39283	(008467–)	Screw, Hex, M10 X 1.50 X 25, 8.8	3
21	32492	(008467–)	Washer, Flat, 0.38, Std	3
22	07792	(008467–)	Nut, Hex, Flng, M10 X 1.50	3
23	06944	(008467–)	Screw, Hex, M6 X 1.00 X 25, 8.8	5
24	32483	(008467–)	Washer, Flat, 0.25, Sae	14
25	08708	(008467–)	Nut, Hex, Lock, M6 X 1.00, Nl	11
26	06946	(008467–)	Screw, Hex, M6 X 1.00 X 35, 8.8	4

Fig. 4 – Brush Door Group, Right

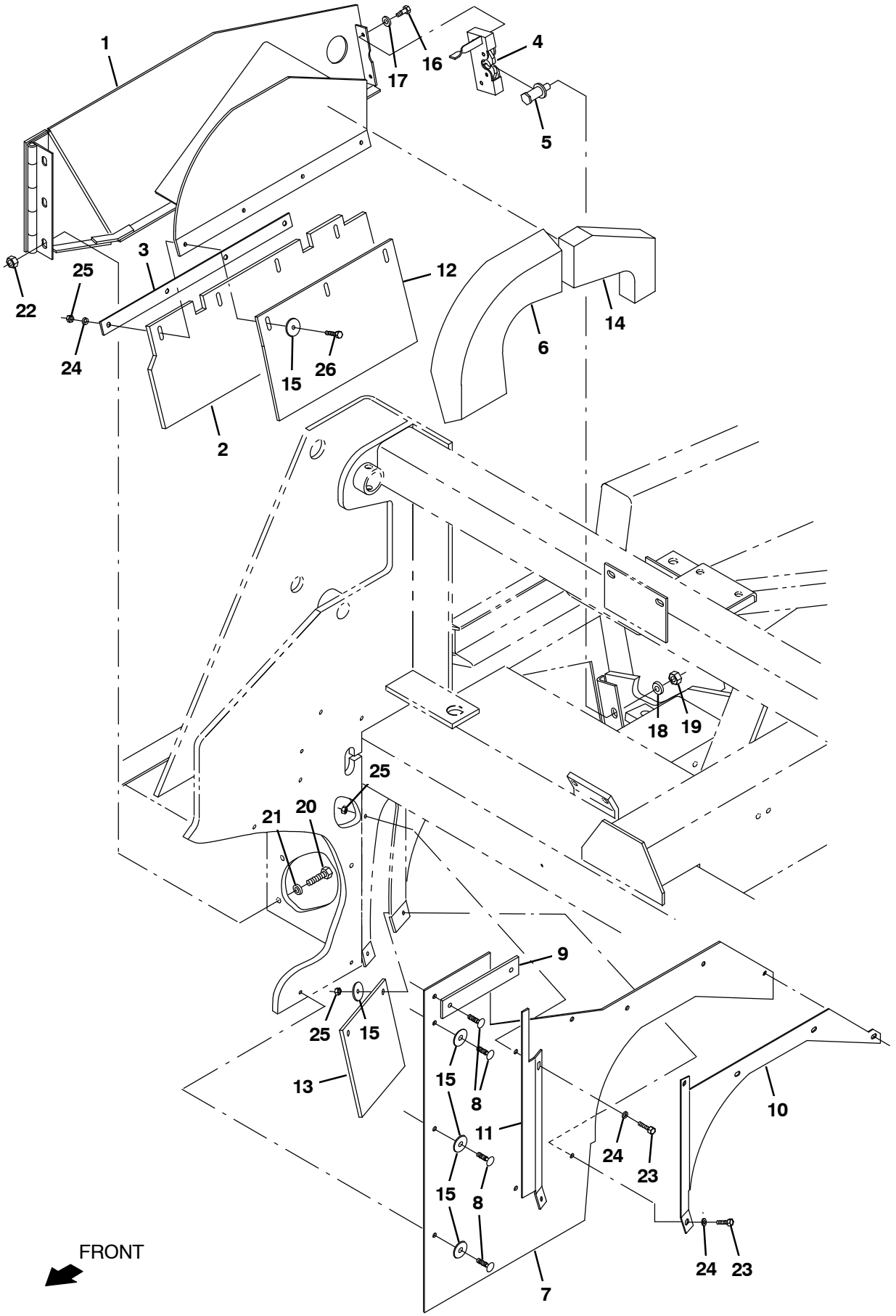

07584 – G, LP

Fig. 4 – Brush Door Group, Right

Ref.	Part No.	Serial Number	Description	Qty.
1	1073818	(008467–)	Door Wldt, Brush, Rh [800 Gray]	1
2	73870	(008467–)	Skirt, Neo, .37, 07.50w 21.75l, 04/ Sl	1
3	70453	(008467–)	Retainer, Skirt, .12, 1.0w X 18.5l, Blk	1
4	58844	(008467–)	Latch	1
5	58898	(008467–)	Bolt, Latch, F/58489/58844	1
6	70808	(008467–)	Seal, Rbr, Clsd, 1.62, Door, Brush, Rh	1
7	73654	(008467–)	Seal, Brush, Side, Complt [800l]	1
8	21168	(008467–)	Plug, Hole, Rnd, 0.25h 0.8l, Brb, Nyl	5
9	21282	(008467–)	Retainer, Skirt, .08, 1.5w X 07.5l	1
10	70598	(008467–)	Retainer, Skirt, .07	1
11	73649	(008467–)	Retainer, Skirt, .12, 1.2w X 15.7l	1
12	64788	(008467–)	Skirt, Rbr, .25, 07.84w 13.50l, 03/ Sl	1
13	73888	(008467–)	Skirt, Rbr, .25, 07.45w 06.37l, 02/ Hole	1
14	74063	(008467–)	Insulation, Acstc, 1.5, 07.8 X 08.0 Cham	1
15	41178	(008467–)	Washer, Flat, 0.25, Fendr	9
16	34323	(008467–)	Screw, Hex, .25–20 X 0.75, Nl	2
17	41185	(008467–)	Washer, Flat, Belleville, .25	2
18	39346	(008467–)	Washer, Flat, 0.44, Std	1
19	43955	(008467–)	Nut, Hex, Std, .44–14, 5	1
20	39283	(008467–)	Screw, Hex, M10 X 1.50 X 25, 8.8	3
21	32492	(008467–)	Washer, Flat, 0.38, Std	3
22	07792	(008467–)	Nut, Hex, Flng, M10 X 1.50	3
23	06944	(008467–)	Screw, Hex, M6 X 1.00 X 25, 8.8	5
24	32483	(008467–)	Washer, Flat, 0.25, Sae	14
25	08708	(008467–)	Nut, Hex, Lock, M6 X 1.00, Nl	11
26	06946	(008467–)	Screw, Hex, M6 X 1.00 X 35, 8.8	4

Fig. 5 – Operator Station Group

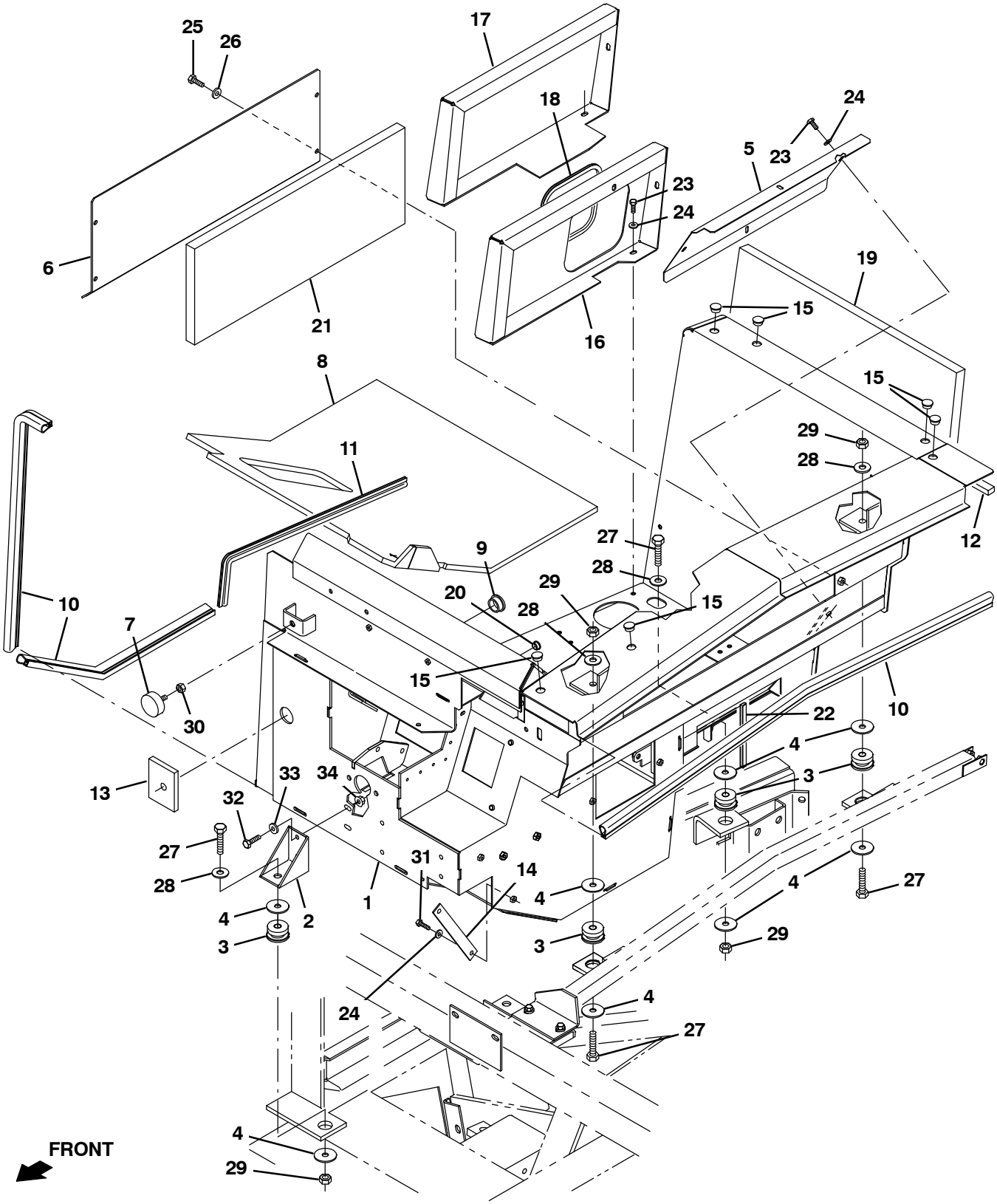

350667 – G, LP

Fig. 5 – Operator Station Group

Ref.	Part No.	Serial Number	Description	Qty.
1	9012871	(008467–)	Panel, Oprtr Station, W/ Label[800 Gray]	1
2	63751	(008467–)	Bracket Wldt, Oprtr Station	1
3	51176	(008467–)	Isolator, Vib, .50d	4
4	04414	(008467–)	Washer, Flat, 0.53b 1.88d .12, Stl, Pl	8
5	1073819	(008467–)	Cover, Access, Oprtr Station, Side[Gray]	1
6	1073844	(008467–)	Panel, Access, Eng, 27.0l X 10.8w [Gray]	1
7	70756	(008467–)	Bumper, Rbr, 2.0d 0.75th .38–16	1
8	76495	(008467–)	Pad, Rbr, Floormat, .44 27.0w 28.3l	1
9	76888	(008467–)	Plug, Hole, Rnd, 1.25h .03–.12, Blk Nyl	1
10	1050781	(008467–)	Seal, Afmkt, Bulb, 90, 1.33 08ft	1
11	1050775	(008467–)	Seal, Afmkt, Bulb, Str, 0.58d 03ft	1
12	74081	(008467–)	Seal, Rbr, Open, 0.50, 1.00w 60.0l	1
13	79028	(008467–)	Seal, Rbr, Clsd, 0.50, 3.0w 04.0l 1/H	1
14	1073831	(008467–)	Bar, Stl, 0.12, 01.00 X 08.32l[800 Gray]	1
15	75428	(008467–)	Plug, Hole, Rnd, 0.75h .03–.12, Blk Nyl	7
16	9012857	(008467–)	Cover, Side, Fuel, Gas, W/ Label[800b/G]	1
17	1074280	(008467–)	Panel, Side, Fuel Filler, Lpg [Gray]	1
18	380692	(008467–)	Molding, Trim, Pvc, .08–.11 26.5l	1
19	23946	(008467–)	Insulation, Acstc, 1.0, 26.5 X 27.3 Ntch	1
20	33806	(008467–)	Plug, Hole, Rnd, 0.38h .03–.12, Nyl[Wht]	1
21	375698	(008467–)	Insulation, Acstc, 1.0, 25.0 X 09.9	1
22	62595–16	(008467–)	Molding, Trim, Pvc, .08–.11 08.5l	1
23	06943	(008467–)	Screw, Hex, M6 X 1.00 X 20, 8.8	9
24	19066	(008467–)	Washer, Flat, 0.25b 0.56d .05, Pl, 10	9
25	16931	(008467–)	Screw, Hex, M8 X 1.25 X 20, 8.8	4
26	39349	(008467–)	Washer, Flat, 0.31, Sae	4
27	06972	(008467–)	Screw, Hex, M12 X 1.75 X 60, 8.8	4
28	32493	(008467–)	Washer, Flat, 0.50, Std	4
29	08711	(008467–)	Nut, Hex, Lock, M12 X 1.75, Nl	4
30	32522	(008467–)	Nut, Hex, Jam, .38–16	1
31	06944	(008467–)	Screw, Hex, M6 X 1.00 X 25, 8.8	2
32	39277	(008467–)	Screw, Hex, M8 X 1.25 X 25, 8.8	2
33	41186	(008467–)	Washer, Flat, Belleville, .31	2
34	07791	(008467–)	Nut, Hex, Flng, M8 X 1.25	2

Fig. 6 – Seat Group

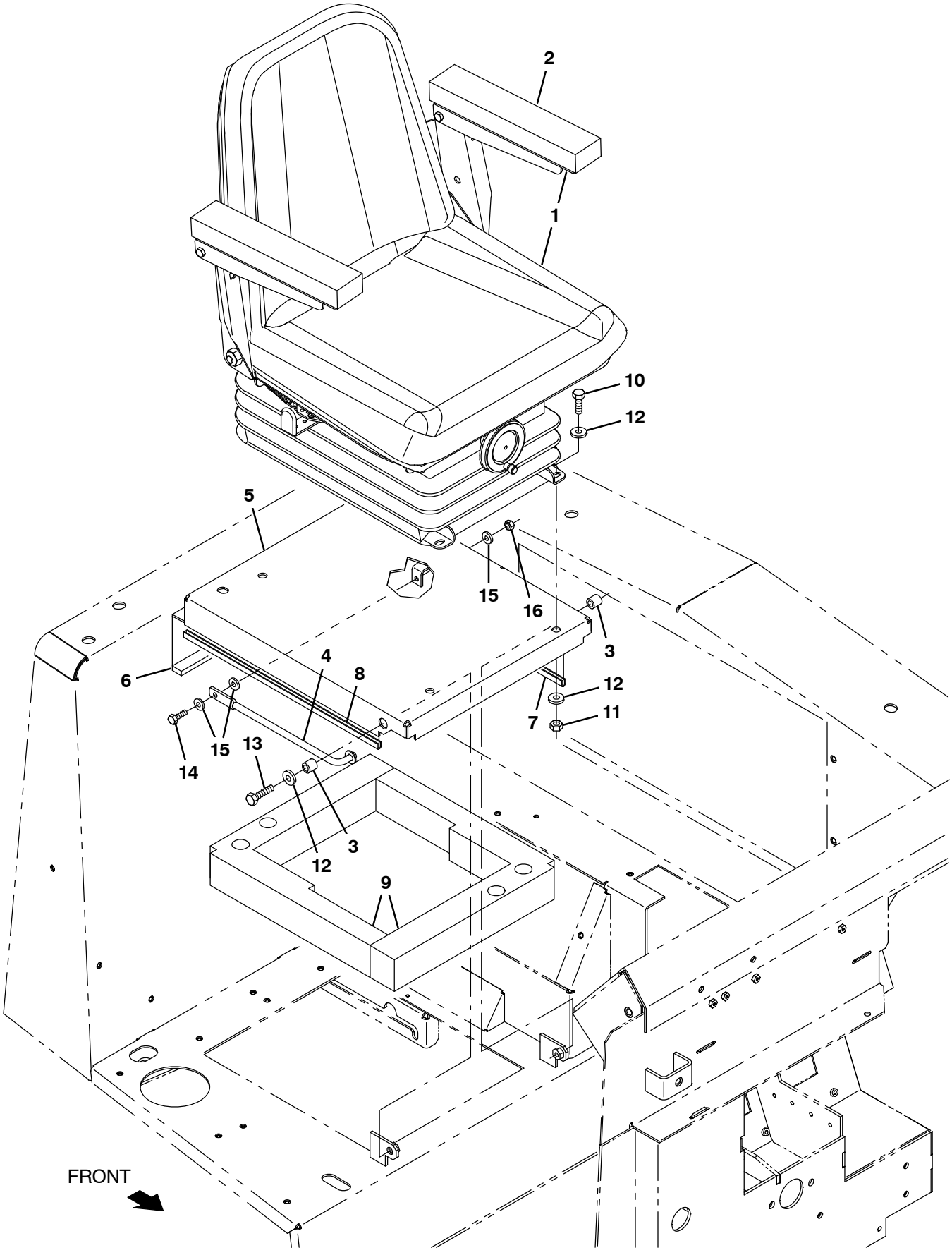

356578 – G, LP

Fig. 6 – Seat Group

	Ref.	Part No.	Serial Number		Description	Qty.
▽	1	63294	(008467–	)	Seat, Suspension [Seats Inc]	1
▲	2	311336	(008467–	)	Cs, Armrest, Blk	1
	3	40716	(008467–	)	Tube, 0.38id 0.62od 00.6l, Stl	2
	4	54615	(008467–	)	Arm Wldt, Safety, Sppt, Seat, .38d 10.1l	1
	5	1073824	(008467–	)	Support Wldt, Seat [800 Gray]	1
	6	44777	(008467–	)	Seal, Rbr, Open, 0.31, 0.75w 14.8l Adh	1
	7	62595–3	(008467–	)	Molding, Trim, Pvc, .08–.11 05.8l	1
	8	62595–2	(008467–	)	Molding, Trim, Pvc, .08–.11 15.8l	1
	9	76285	(008467–	)	Insulation, Acstc, 2.3, 13.5 X 13.5 Ntch	2
	10	39277	(008467–	)	Screw, Hex, M8 X 1.25 X 25, 8.8	4
	11	08709	(008467–	)	Nut, Hex, Lock, M8 X 1.25, Nl	4
	12	32491	(008467–	)	Washer, Flat, 0.31, Std	10
	13	06955	(008467–	)	Screw, Hex, M8 X 1.25 X 35, 8.8	2
	14	06943	(008467–	)	Screw, Hex, M6 X 1.00 X 20, 8.8	1
	15	19066	(008467–	)	Washer, Flat, 0.25b 0.56d .05, Pl, 10	3
	16	08708	(008467–	)	Nut, Hex, Lock, M6 X 1.00, Nl	1

Fig. 7 – Engine Cover Group, Top

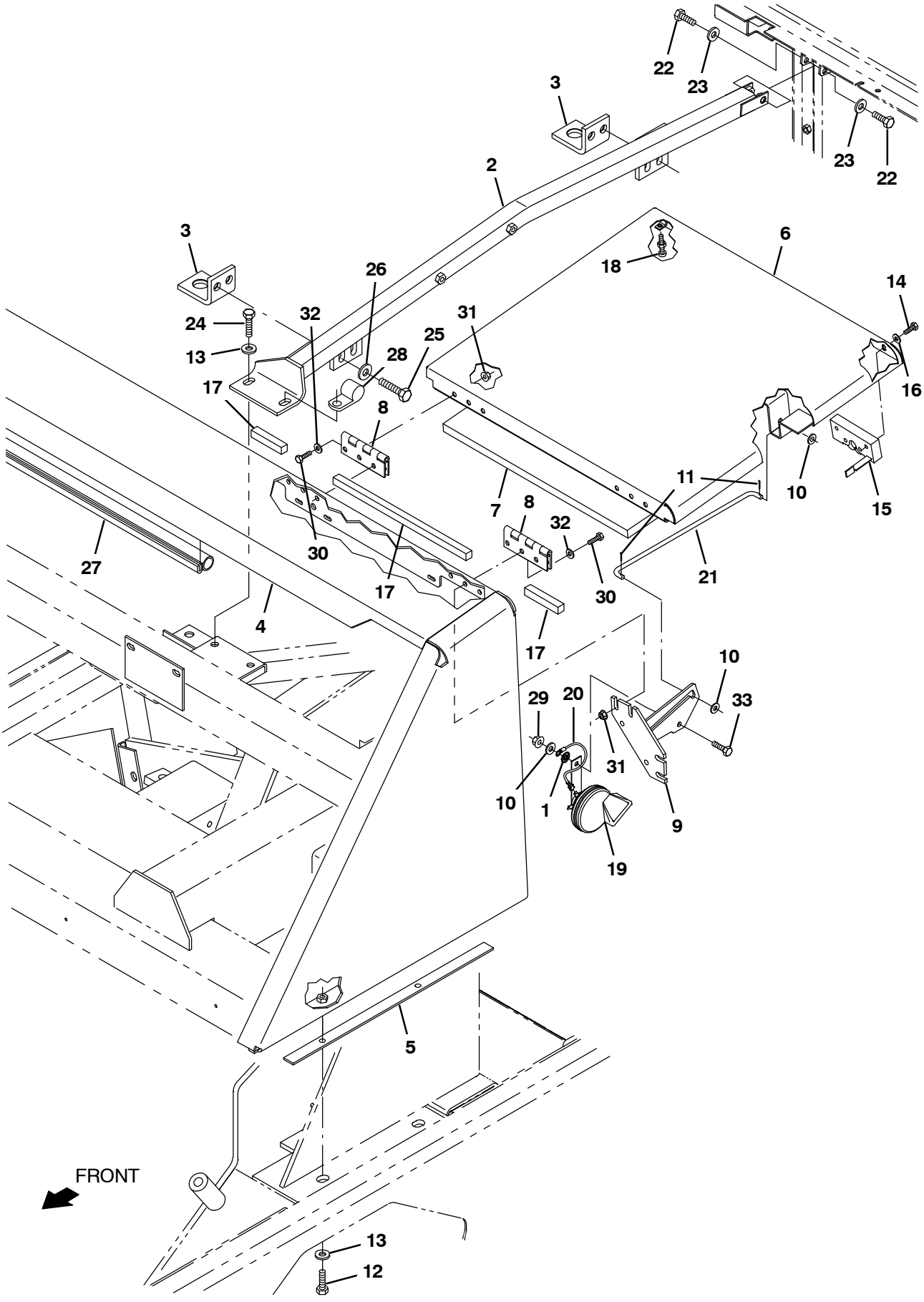

350669 – G, LP

Fig. 7 – Engine Cover Group, Top

Ref.	Part No.	Serial Number	Description	Qty.
1	41141	(008467–)	Washer, Lock, Int–Ext, 0.31	1
2	380533	(008467–)	Tube Wldt, Brace, Cntr	1
3	380532	(008467–)	Bracket, Brace, Cntr	2
4	1073815	(008500)	Panel Wldt, Lintel [800 Gray]	1
5	64279	(008467–)	Bar, Flat, Stl 0.18, 01.00 X 15.0l	2
6	1073827	(008467–)	Door Wldt, Eng, Top [800 B/Green]	1
7	76870	(008467–)	Insulation, Acstc, 0.8, 20.3 X 19.3	1
8	74040	(008467–)	Hinge	2
9	21131	(008467–)	Bracket Wldt, Gasspring	1
10	32491	(008467–)	Washer, Flat, 0.31, Std	3
11	39005	(008467–)	Pin, Cotter, .094 X 0.75	2
12	39284	(008467–)	Screw, Hex, M10 X 1.50 X 35, 8.8	4
13	32492	(008467–)	Washer, Flat, 0.38, Std	5
14	34323	(008467–)	Screw, Hex, .25–20 X 0.75, Nl	2
15	58844	(008467–)	Latch	1
16	32490	(008467–)	Washer, Flat, 0.25, Std	2
17	53461–2	(008467–)	Seal, Rbr, Open, 0.63, 0.63w 24.5l	1
18	75128	(008467–)	Spindle, Adjustment	1
19	369704	(008467–)	Horn, 12vdc, Dba [Wolo]	1
20	70284	(008467–)	Wire, 16ga 06.0l Blk .25qf /.31ring	1
21	75883	(008467–)	Arm, Safety, Sppt, Cover, Eng, .31d 14.5	1
22	06961	(008467–)	Screw, Hex, M10 X 1.5	2
23	32485	(008467–)	Washer, Flat, 0.38, Sae	2
24	03192	(008467–)	Screw, Hex, M10 X 1.50 X 30, 8.8	1
25	06969	(008467–)	Screw, Hex, M12 X 1.75 X 40, 8.8	4
26	32486	(008467–)	Washer Flat,0.50,Sae	4
27	1050787	(008467–)	Seal, Afmkt, Bulb, 90, 1.33 03ft	1
28	58366	(008467–)	Clamp, Cable, Stl, 1.25d X 1.00w, 1hole	1
29	07791	(008467–)	Nut, Hex, Flng, M8 X 1.25	1
30	06944	(008467–)	Screw, Hex, M6 X 1.00 X 25, 8.8	12
31	07790	(008467–)	Nut, Hex, Flng, M6 X 1.00	12
32	41185	(008467–)	Washer, Flat, Belleville, .25	12
33	16931	(008467–)	Screw, Hex, M8 X 1.25 X 20, 8.8	1

Fig. 8 – Engine Cover Group, Rear

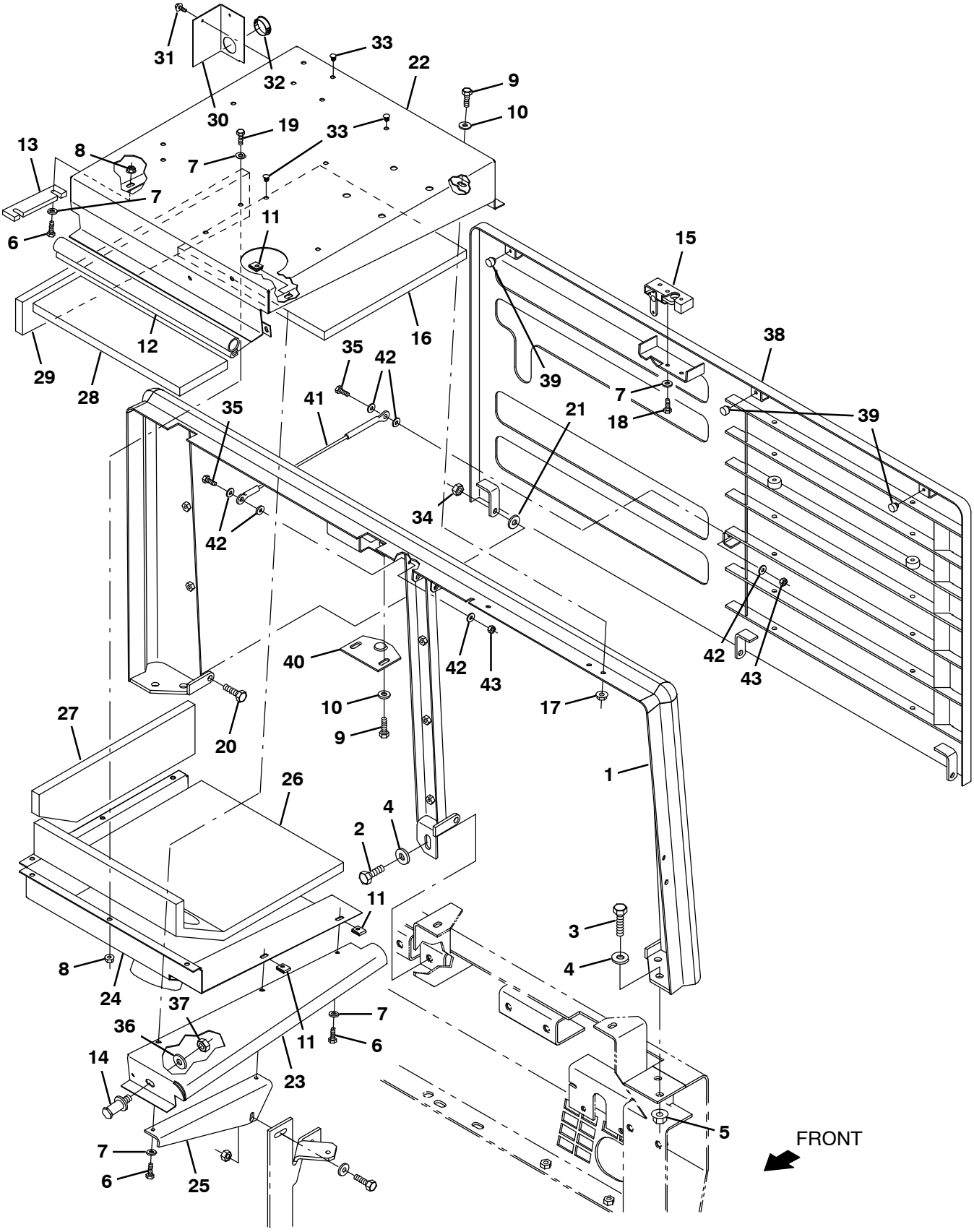

356440 – G, LP

Fig. 8 – Engine Cover Group, Rear

Ref.	Part No.	Serial Number	Description	Qty.
1	1073816	(008467–)	Lintel Wldt, Rear [800 B/Green]	1
2	41345	(008467–)	Screw, Hex, M12 X 1.75 X 25, 8.8	1
3	41346	(008467–)	Screw, Hex, M12 X 1.75 X 30, 8.8	4
4	32486	(008467–)	Washer Flat,0.50,Sae	5
5	07793	(008467–)	Nut, Hex, Flng, M12 X 1.75	4
6	06944	(008467–)	Screw, Hex, M6 X 1.00 X 25, 8.8	5
7	41185	(008467–)	Washer, Flat, Belleville, .25	13
8	07790	(008467–)	Nut, Hex, Flng, M6 X 1.00	8
9	16931	(008467–)	Screw, Hex, M8 X 1.25 X 20, 8.8	5
10	32491	(008467–)	Washer, Flat, 0.31, Std	5
11	12271	(008467–)	Nut, U, M6 X 1.00	3
12	1050786	(008467–)	Seal, Afmkt, Bulb, 90, 1.33 02ft	1
13	21230	(008467–)	Bar, Sppt, Eng Cover	1
14	59192	(008467–)	Latch, Bolt	1
15	59661	(008467–)	Latch	1
16	375537	(008467–)	Insulation, Acstc, 0.5, 17.0 X 15.0	1
17	07791	(008467–)	Nut, Hex, Flng, M8 X 1.25	3
18	25046	(008467–)	Screw, Hex, .25–20 X 1.00, G5	2
19	06942	(008467–)	Screw, Hex, M6 X 1.00 X 16, 8.8	6
20	03192	(008467–)	Screw, Hex, M10 X 1.50 X 30, 8.8	3
21	32485	(008467–)	Washer, Flat, 0.38, Sae	3
22	1073804	(008467–)	Panel Wldt, Cover, Eng, Top[800 B/Green]	1
23	1073837	(008467–)	Cover, Eng, Top [800 B/Green]	1
24	47958	(008467–)	Panel, Duct, Vacuum	1
25	375513	(008467–)	Bracket, Angle, Sppt, Hood	1
26	380761	(008467–)	Insulation, Acstc, 0.8, 18.0 X 15.0 C–O	1
27	380762	(008467–)	Insulation, Acstc, 0.8, 16.5 X 04.5 Cham	1
28	380763	(008467–)	Insulation, Acstc, 0.8, 15.5 X 05.0	1
29	380764	(008467–)	Insulation, Acstc, 0.8, 23.0 X 04.0	1
30	1077192	(008467–)	Panel, Corner, Cover, Eng [800 B/Green]	1
31	55845	(008467–)	Screw, Hex, M5 X 0.80 X 16, Fmg	1
32	1061216	(008467–)	Plug, Hole, Rnd, 1.37h 0.45l, Blk Nyl	1
33	77399	(008467–)	Plug, Hole, Rnd, 0.24h 0.5l , Brb	11
34	41430	(008467–)	Nut, Hex, Lock, M10 X 1.5, Nl	3
35	06943	(008467–)	Screw, Hex, M6 X 1.00 X 20, 8.8	2
36	32486	(008467–)	Washer Flat,0.50,Sae	1
37	39313	(008467–)	Nut, Hex, Std, M12 X 1.75	1
38	1073811	(008467–)	Door Wldt, Access, Rear, W/ Grill [B/Gr]	1
39	51787	(008467–)	Bumper, Rbr, 0.6d 0.34th 0.3d Tip	3
40	65252	(008467–)	Plate, Strike	1
41	36192	(008467–)	Cable, Glv .13d 021.0l 330eye /330eye	1
42	19066	(008467–)	Washer, Flat, 0.25b 0.56d .05, Pl, 10	6
43	08708	(008467–)	Nut, Hex, Lock, M6 X 1.00, Nl	2

Fig. 9 – Engine Cover Group, Side

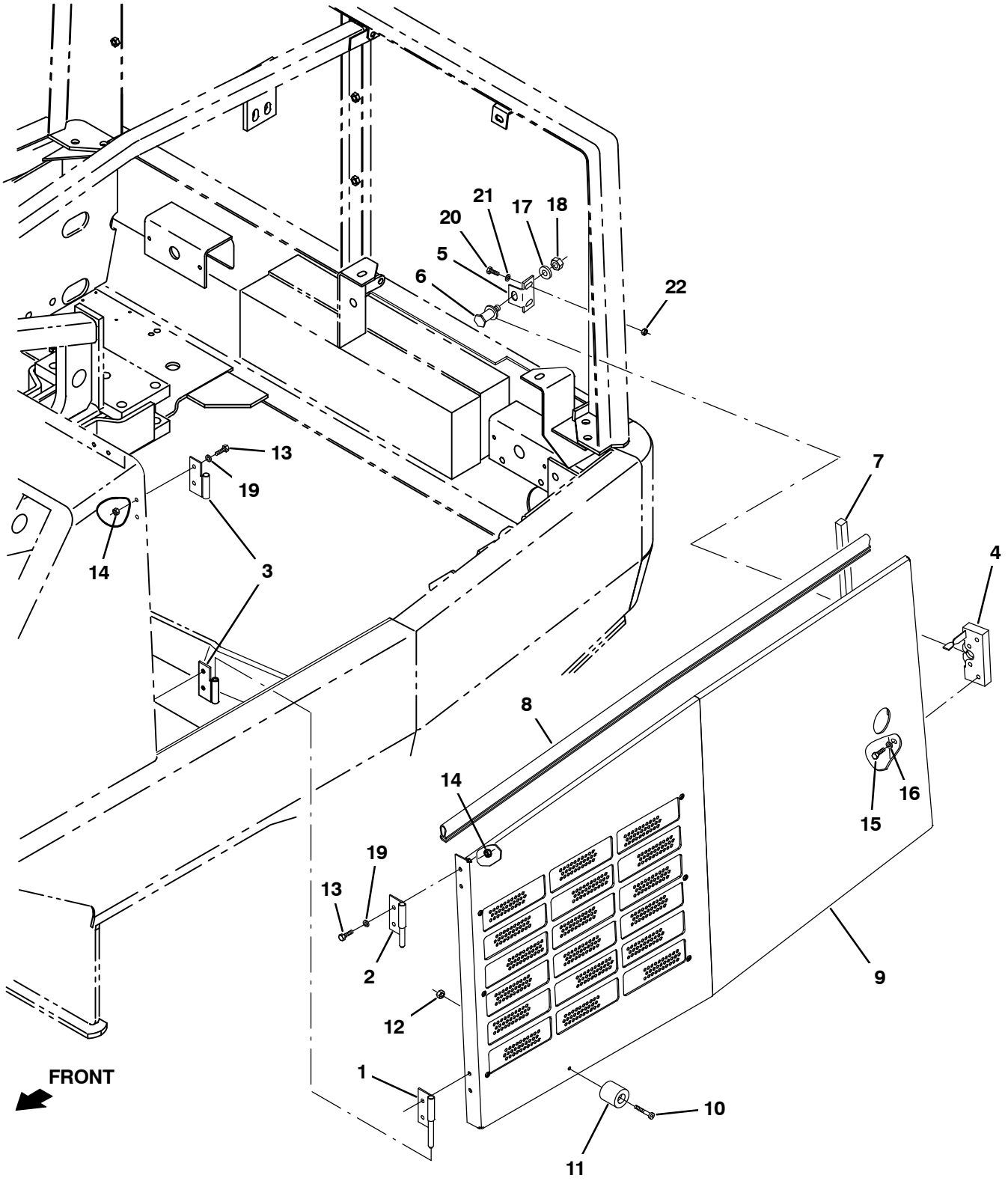

350680 – G, LP

Fig. 9 – Engine Cover Group, Side

	Ref.	Part No.	Serial Number	Description	Qty.
	1	64543	(008467–)	Hinge Wldt, Door, Side, W/ Pin	1
	2	70628	(008467–)	Hinge Wldt, Side, W/ Pin	1
	3	64545	(008467–)	Hinge Wldt, W/ Tube	2
	4	58489	(008467–)	Latch	1
	5	1073822	(008467–)	Angle, Bolt, Latch [800 Gray]	1
	6	59192	(008467–)	Latch, Bolt	1
	7	53461–2	(008467–)	Seal, Rbr, Open, 0.63, 0.63w 24.5l	1
	8	57820	(008467–)	Seal, Bulb, 90, 1.33 .06–.09grip 048.0l	1
▽	9	9012879	(008467–)	Door Assy [800 B/Green]	1
▲		9004327	(008467–)	Screen Kit, Door, Side, Modif	1
	10	09258	(008467–)	Screw, Pan, Phl, M6 X 1.00 X 40, 4.8	1
	11	44851	(008467–)	Bumper, Rbr, 1.5d 1.50th 0.28h	1
	12	08708	(008467–)	Nut, Hex, Lock, M6 X 1.00, Nl	1
	13	06943	(008467–)	Screw, Hex, M6 X 1.00 X 20, 8.8	8
	14	07790	(008467–)	Nut, Hex, Flng, M6 X 1.00	8
	15	34323	(008467–)	Screw, Hex, .25–20 X 0.75, Nl	2
	16	32490	(008467–)	Washer, Flat, 0.25, Std	2
	17	32493	(008467–)	Washer, Flat, 0.50, Std	1
	18	39313	(008467–)	Nut, Hex, Std, M12 X 1.75	1
	19	41185	(008467–)	Washer, Flat, Belleville, .25	8
	20	16931	(008467–)	Screw, Hex, M8 X 1.25 X 20, 8.8	2
	21	32491	(008467–)	Washer, Flat, 0.31, Std	2
	22	39311	(008467–)	Nut, Hex, Std, M8 X 1.25	2

Fig. 10 – Instrument Panel and Brush Lift Switch Group

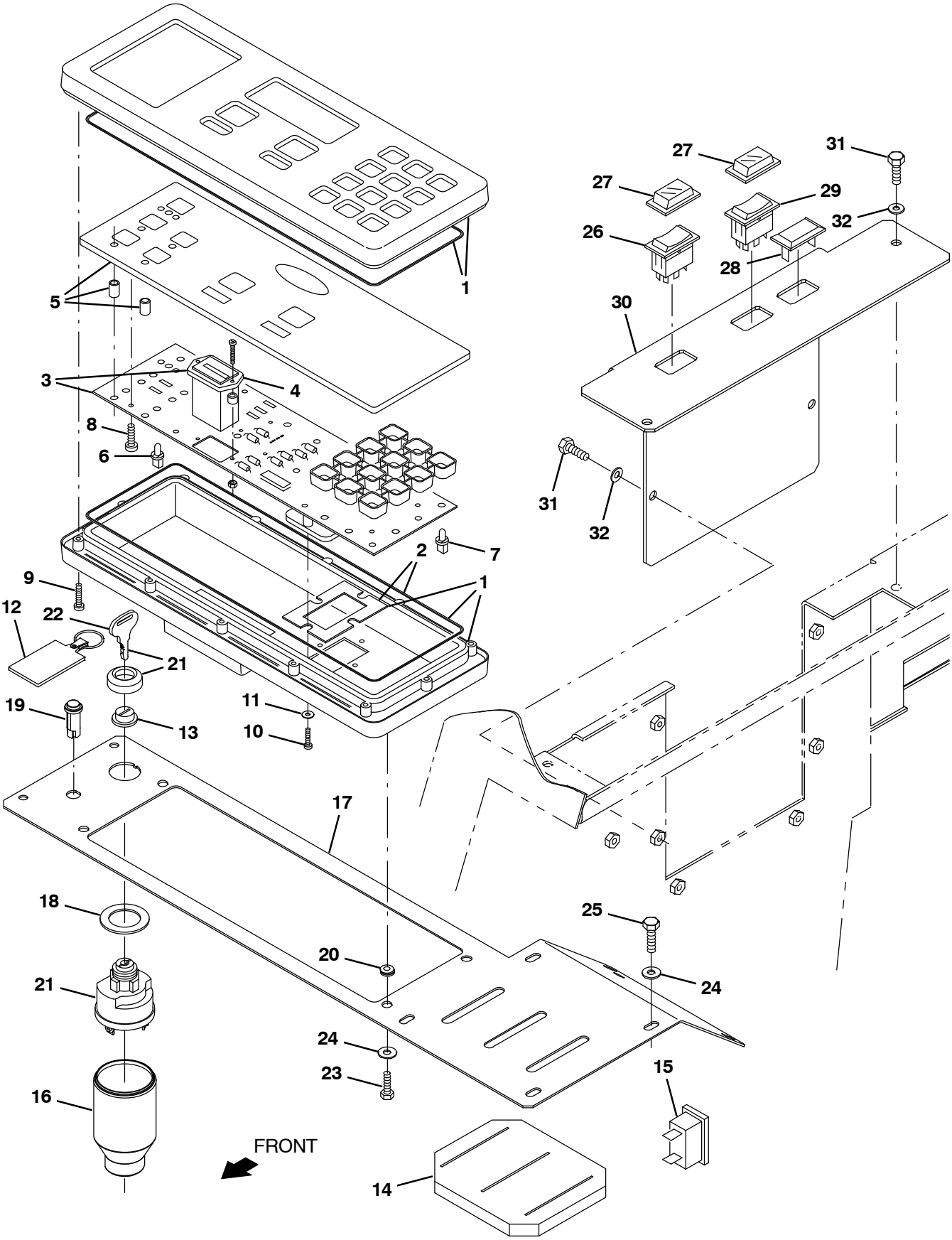

09907 – G, LP

Fig. 10 – Instrument Panel and Brush Lift Switch Group

	Ref.	Part No.	Serial Number	Description	Qty.
▽		59970	(008467–)	Panel Kit, Instmt, F/56296, Replmt	1
▲	1	59976	(008467–)	Case Kit, Instmt, Replmt	1
▲	2	59977	(008467–)	Seal Kit, Org, Replmt	1
▲▽	3	59974	(008467–)	Circuitboard Kit, Replmt [800l/355l]	1
▲▲	4	59978	(008467–)	Gauge Kit, Hourmeter, F/31988, Replmt	1
▲	5	59979	(008467–)	Panel Kit, Touch, F/56300, Replmt	1
▲	6	59971	(008467–)	Lamp Kit, F/59972, Replmt [8 Pk]	2
▲	7	56346	(008467–)	Lamp Kit, F/56330, Replmt [8 Pk]	1
▲	8	06932	(008467–)	Screw, Pan, Phl, M5 X 0.80 X 10, 4.8	8
▲	9	06928	(008467–)	Screw, Pan, Phl, M4 X 0.70 X 20, 4.8	12
▲	10	06921	(008467–)	Screw, Pan, Phl, M3 X 0.50 X 16, 4.8	4
▲	11	02892	(008467–)	Washer, Flat, 0.12b 0.38d .03, Stl, Pl	4
	12	1075003	(008467–)	Keychain, Rectangle, Parts & Service	1
	13	382516	(008467–)	Boot, .63id .29l .90w	1
	14	79648	(008467–)	Seal, Handle, Valve	1
	15	64141	(008467–)	Light, Panl, 12vdc, Red, 1.3 X 0.7	1
	16	383165	(008467–)	Boot, Switch, Ignition	1
	17	1073801	(008467–)	Panel, Cover, Instmt [800 Gray]	1
	18	73736	(008467–)	Washer, Flat, 1.15b 1.75d .08, Stl	1
	19	1012185	(008467–)	Light, Warning, Check Eng, Amb, 14vdc	1
	20	10632–5	(008467–)	Grommet, Rbr, 0.25id, F/0.8h, .09 Matl	4
▽	21	87536	(008467–)	Switch, Ignition [Ku]	1
▲	22	87866	(008467–)	Key, Ignition [Set Of 2]	1
	23	24199	(008467–)	Screw, Hex, M5 X 0.80 X 16, Ss	4
	24	19066	(008467–)	Washer, Flat, 0.25b 0.56d .05, Pl, 10	12
	25	06942	(008467–)	Screw, Hex, M6 X 1.00 X 16, 8.8	8
	26	65561	(008467–)	Switch, Rocker, Spst, On / Off	1
	27	57807	(008467–)	Cover, Seal, Rocker Switch	1
	28	57772	(008467–)	Plug, Hole, Rt, 1.45 X 0.83, Blk Nyl	1
	29	61969	(008467–)	Switch, Rocker, Dpdt, On / Off / On	1
	30	1073903	(008467–)	Panel, Cover, Brush Cntrl, Gas/Lpg[Gray]	1
	31	06943	(008467–)	Screw, Hex, M6 X 1.00 X 20, 8.8	4
	32	19066	(008467–)	Washer, Flat, 0.25b 0.56d .05, Pl, 10	4

Fig. 11 – Circuit Breaker and Relay Group

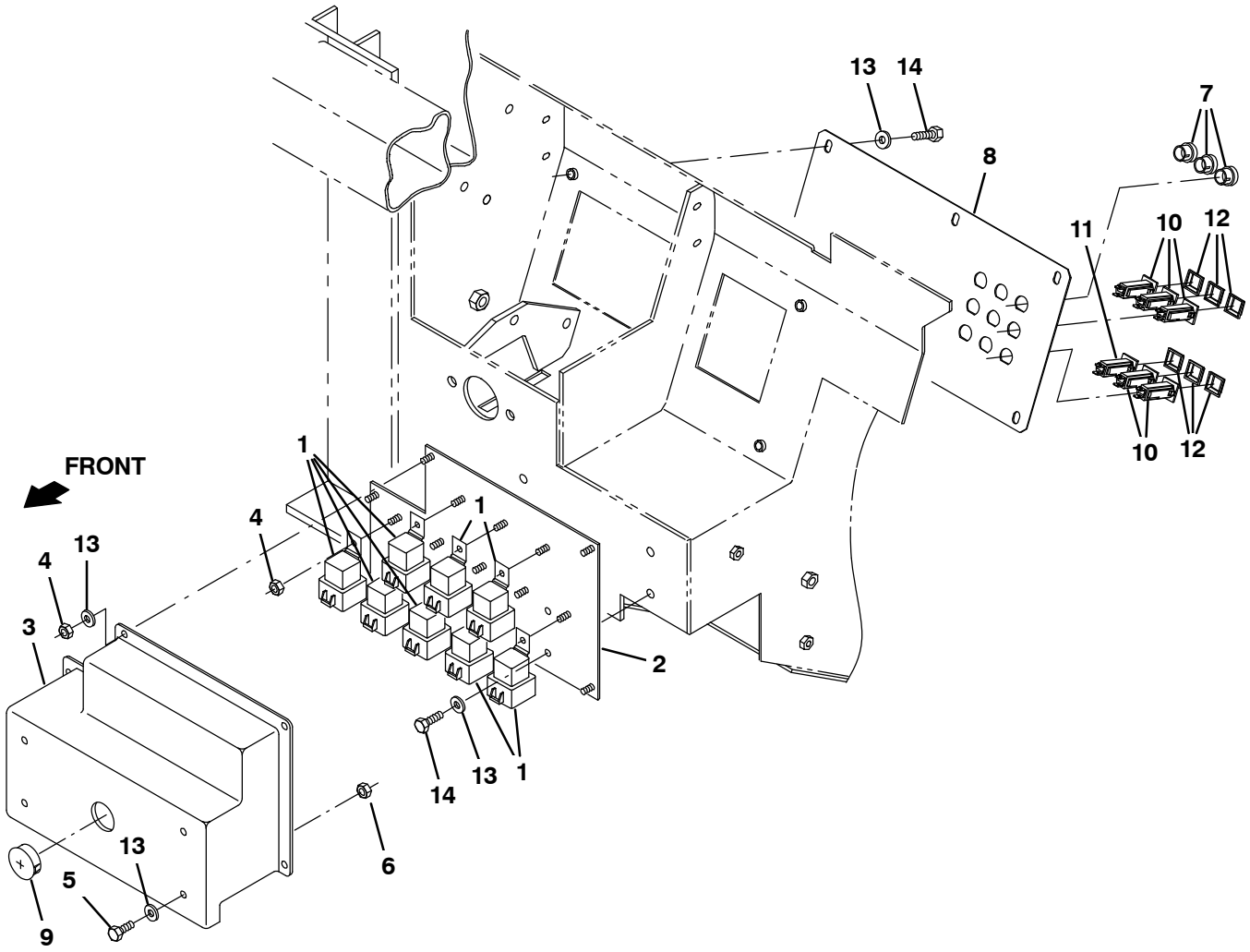

07735 – G, LP

Fig. 11 – Circuit Breaker and Relay Group

Ref.	Part No.	Serial Number	Description	Qty.
1	56186	(008467–)	Relay, Shrouded, 12 Vdc	8
2	70398	(008467–)	Plate, Mtg, Relay	1
3	70402	(008467–)	Cover, Relay Panel	1
7	57167	(008467–)	Plugbtn .62H .03–.12 Blacknyl	3
4	08708	(008467–)	Nut, Hex, Lock, M6 X 1.00, Nl	10
5	06942	(008467–)	Screw, Hex, M6 X 1.00 X 16, 8.8	4
6	07790	(008467–)	Nut, Hex, Flng, M6 X 1.00	4
8	1073823	(008467–)	Plate, Circuitbreaker [800 Gray]	1
9	76888	(008467–)	Button, Plug 1.25H	1
10	1064188	(008467–)	Circuitbreaker, 15A, Restable	5
11	1064184	(008467–)	Circuitbreaker, 2.5A, Restable	1
12	1064191	(008467–)	Boot, Circuitbreaker	6
13	19066	(008467–)	Washer, Flat, 0.25b 0.56d .05, Pl, 10	10
14	06943	(008467–)	Screw, Hex, M6 X 1.00 X 20, 8.8	10

Fig. 12 – Steering Group

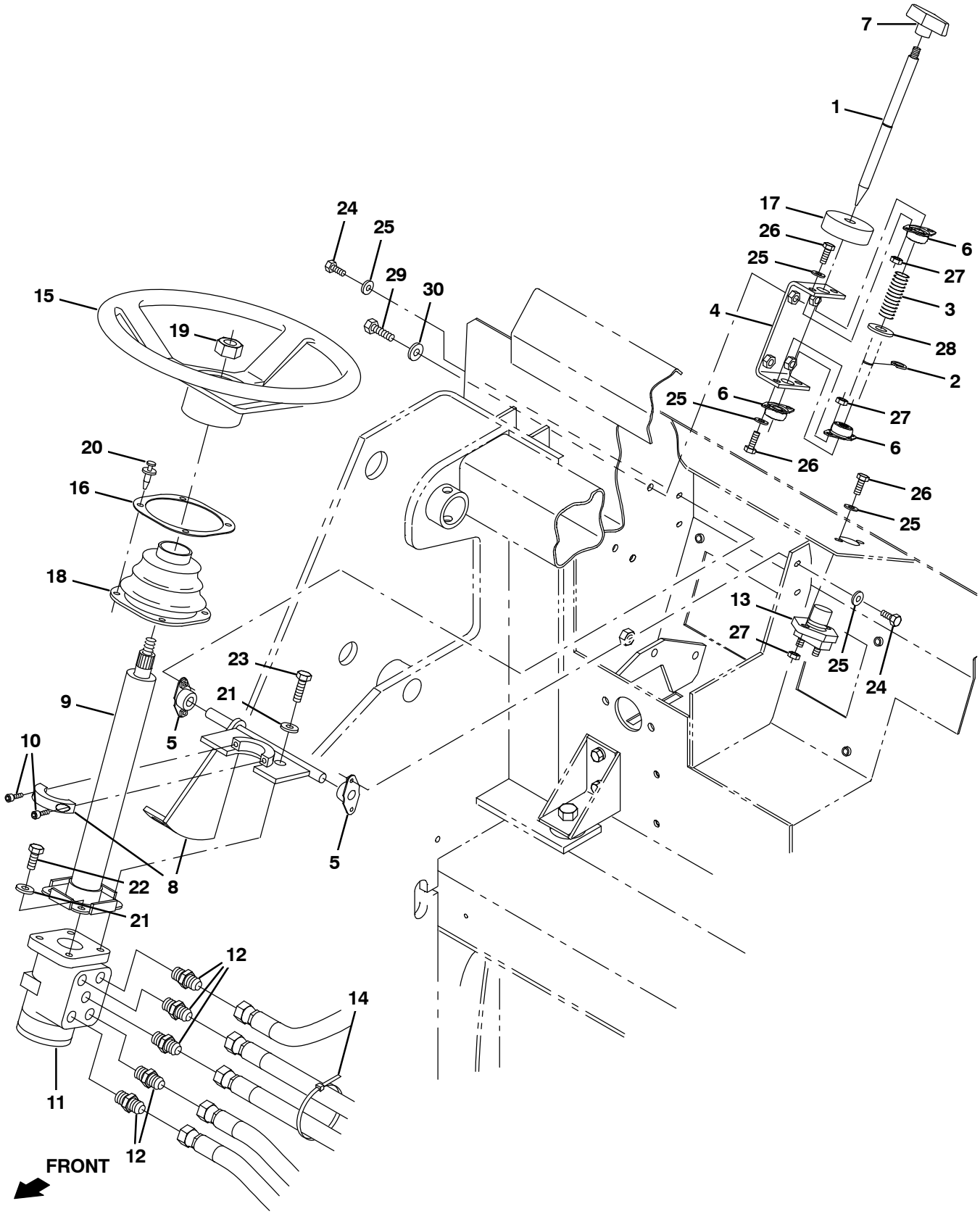

07609 – G, LP

Fig. 12 – Steering Group

	Ref.	Part No.	Serial Number		Description	Qty.
	1	64651	(008467–	)	Rod, Latch, Steering, Tilt	1
	2	70717	(008467–	)	Ring,Retain,Ex,0.50Od,Heavy Dt	1
	3	22290	(008467–	)	Sprng,Comp,0.62Idx.06Wire 2.3L	1
	4	64655	(008467–	)	Channel, Mtg, Steering Latch	1
	5	70709	(008467–	)	Bearing, Flange .500B	2
	6	47585	(008467–	)	Bearing–Flange,2 Hole 0.50Bore	3
	7	04706	(008467–	)	Handle, Lift, Brush	1
	8	64586	(008467–	)	Bracket Wldt, Steering Tilt	1
▽	9	64631	(008467–	)	Column, Steering 12”	1
▲		74142	(008467–	)	Boot	1
	10	21195	(008467–	)	Screw, Hex .38–16X0.75	2
	11	65242	(008467–	)	Steer Control, Hyd (See Breakdowns)	1
	12	56690	(008467–	)	Fitting, Hyd, Str, Jm06/Om06	5
	13	44078	(008467–	)	Switch, Pushmom, Spst100A 12V	1
	14	49263	(008467–	)	Tie, Cable 3.00D Max 11.41Lg	3
▽	15	1058996	(008467–	)	Wheel, Steering, 14.0d 0.81b 36tooth	1
▲		768482	(008467–	)	Cover, Wheel, Steering	1
	16	70623	(008467–	)	Plate, Mtg, Steering Boot	1
	17	75968	(008467–	)	Seal, Bearing	1
	18	70622	(008467–	)	Seal, Boot, Steering Column	1
	19	56185	(008467–	)	Nut, Hex, Jam, M20x1.5 4 Pltd	1
	20	72970	(008467–	)	Rivet, Plastic .250Dx.898	4
	21	32485	(008467–	)	Washer, Flat, 0.38, Sae	4
	22	27988	(008467–	)	Screw, Hex, .38–16 X 1.50, G5	2
	23	21195	(008467–	)	Screw, Hex, .38–16 X 0.75, G5	2
	24	11329	(008467–	)	Screw, Hex, M6 X 1.00 X 16, Nl, Ss	4
	25	19066	(008467–	)	Washer, Flat, 0.25b 0.56d .05, Pl, 10	14
	26	06943	(008467–	)	Screw, Hex, M6 X 1.00 X 20, 8.8	4
	27	08708	(008467–	)	Nut, Hex, Lock, M6 X 1.00, Nl	6
	28	32486	(008467–	)	Washer Flat,0.50,Sae	1
	29	39277	(008467–	)	Screw, Hex, M8 X 1.25 X 25, 8.8	3
	30	41186	(008467–	)	Washer, Flat, Belleville, .31	3

Fig. 13 – Engine and Mount Group, Gas

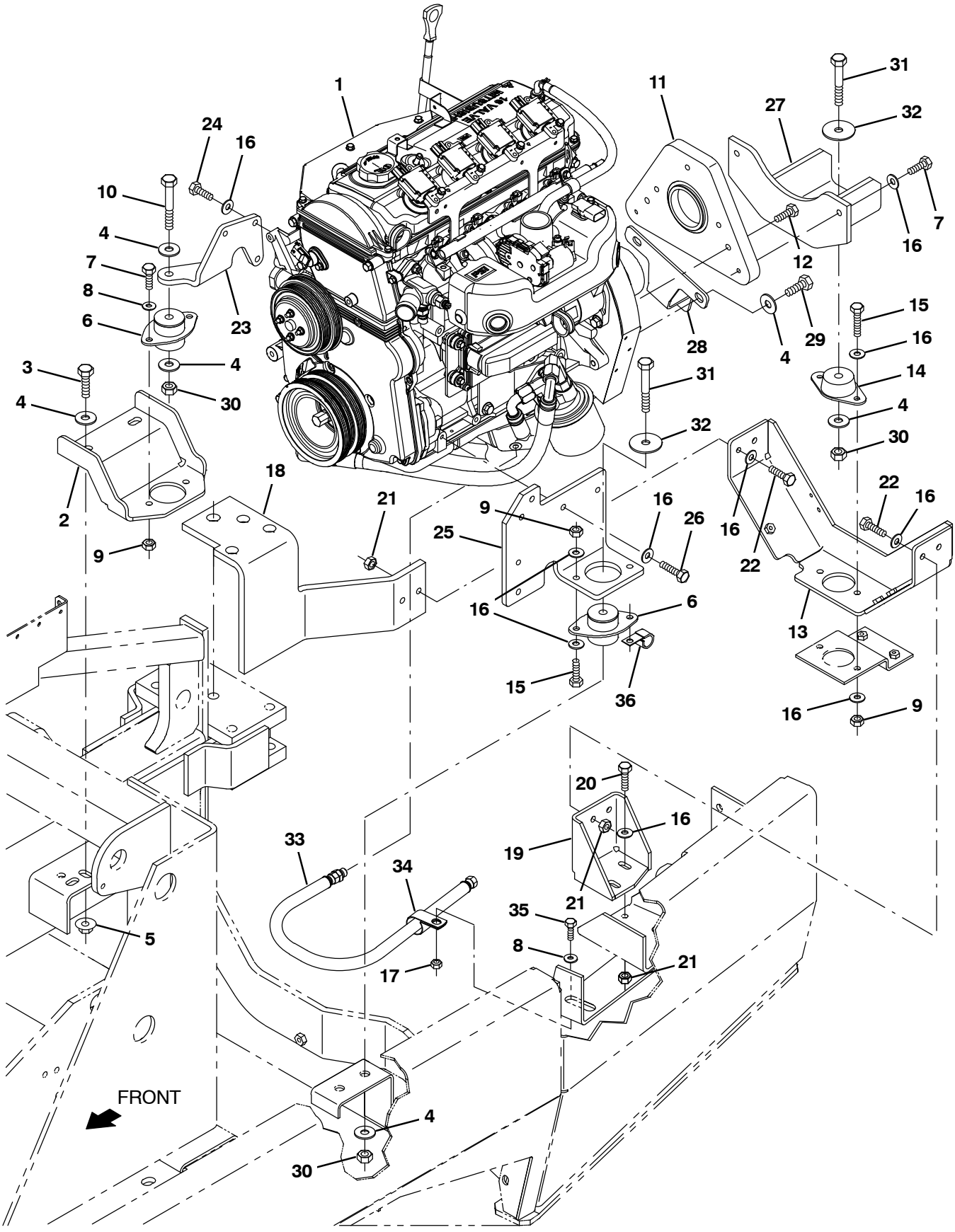

356711 – G

Fig. 13 – Engine and Mount Group, Gas

Ref.	Part No.	Serial Number	Description	Qty.
1	1075174	(008467–)	Engine Assy, Gas [4g64, 800 Mit]	1
2	1075040	(008467–)	Bracket Wldt, Mtg, Eng, Front, Rh	1
3	41346	(008467–)	Screw, Hex, M12 X 1.75 X 30, 8.8	2
4	32493	(008467–)	Washer, Flat, 0.56b 1.38d .11, Stl, Pl	8
5	07793	(008467–)	Nut, Hex, Flng, M12 X 1.75	2
6	75768	(008467–)	Isolator, Vib, Flng, 2.0h .5b 2/.41h	2
7	21198	(008467–)	Screw, Hex, .38–16 X 1.25, G5	4
8	32491	(008467–)	Washer, Flat, 0.31, Std	2
9	50902	(008467–)	Nut, Hex, Lock, .38–16, Nl	6
10	06972	(008467–)	Screw, Hex, M12 X 1.75 X 60, 8.8	1
11	1075056	(008467–)	Plate, Adapter, Pump	1
12	07299	(008467–)	Screw, Hex, M10 X 1.25 X 25, 8.8	3
13	1072998	(008467–)	Bracket, Cradle, Rear [800]	1
14	63263	(008467–)	Isolator, Vib, Flng, 1.3h .5b 2/.39h	1
15	36801	(008467–)	Screw, Hex, .38–16 X 1.50, Fl	4
16	32492	(008467–)	Washer, Flat, 0.38, Std	21
17	08709	(008467–)	Nut, Hex, Lock, M8 X 1.25, Nl	1
18	77435	(008467–)	Bracket, Mtg, Eng, Rear, Rh, Dsl	1
19	77434	(008467–)	Bracket, Mtg, Eng, Rear, Lh	1
20	03192	(008467–)	Screw, Hex, M10 X 1.50 X 30, 8.8	2
21	41430	(008467–)	Nut, Hex, Lock, M10 X 1.5, Nl	6
22	39284	(008467–)	Screw, Hex, M10 X 1.50 X 35, 8.8	4
23	1075127	(008467–)	Bracket, Mtg, Eng, Front, Rh [800 Mits]	1
24	07299	(008467–)	Screw, Hex, M10 X 1.25 X 25, 8.8	3
25	1075067	(008467–)	Bracket Wldt, Mtg, Eng, Lh [800 Mits]	1
26	33612	(008467–)	Screw, Hex, M10 X 1.25 X 35, 8.8	2
27	1014411	(008467–)	Channel Wldt, Mtg, Eng, Rear	1
28	1075050	(008467–)	Bracket, Isolator	1
29	41345	(008467–)	Screw, Hex, M12 X 1.75 X 25, 8.8	2
30	08711	(008467–)	Nut, Hex, Lock, M12 X 1.75, Nl	1
31	06973	(008467–)	Screw, Hex, M12 X 1.75 X 70, 8.8	1
32	57048	(008467–)	Washer, Flat, 0.53b 2.13d .11, Stl, Pl	2
33	9015930	(008467–)	Hose, Drain, Oil [2.4 Mit]	1
34	58366	(008467–)	Clamp, Cable, Stl, 1.25d X 1.00w, 1hole	1
35	16931	(008467–)	Screw, Hex, M8 X 1.25 X 20, 8.8	1
36	30407	(008467–)	Clip, Keeper, Open	1

Fig. 14 – Engine and Mount Group, LPG

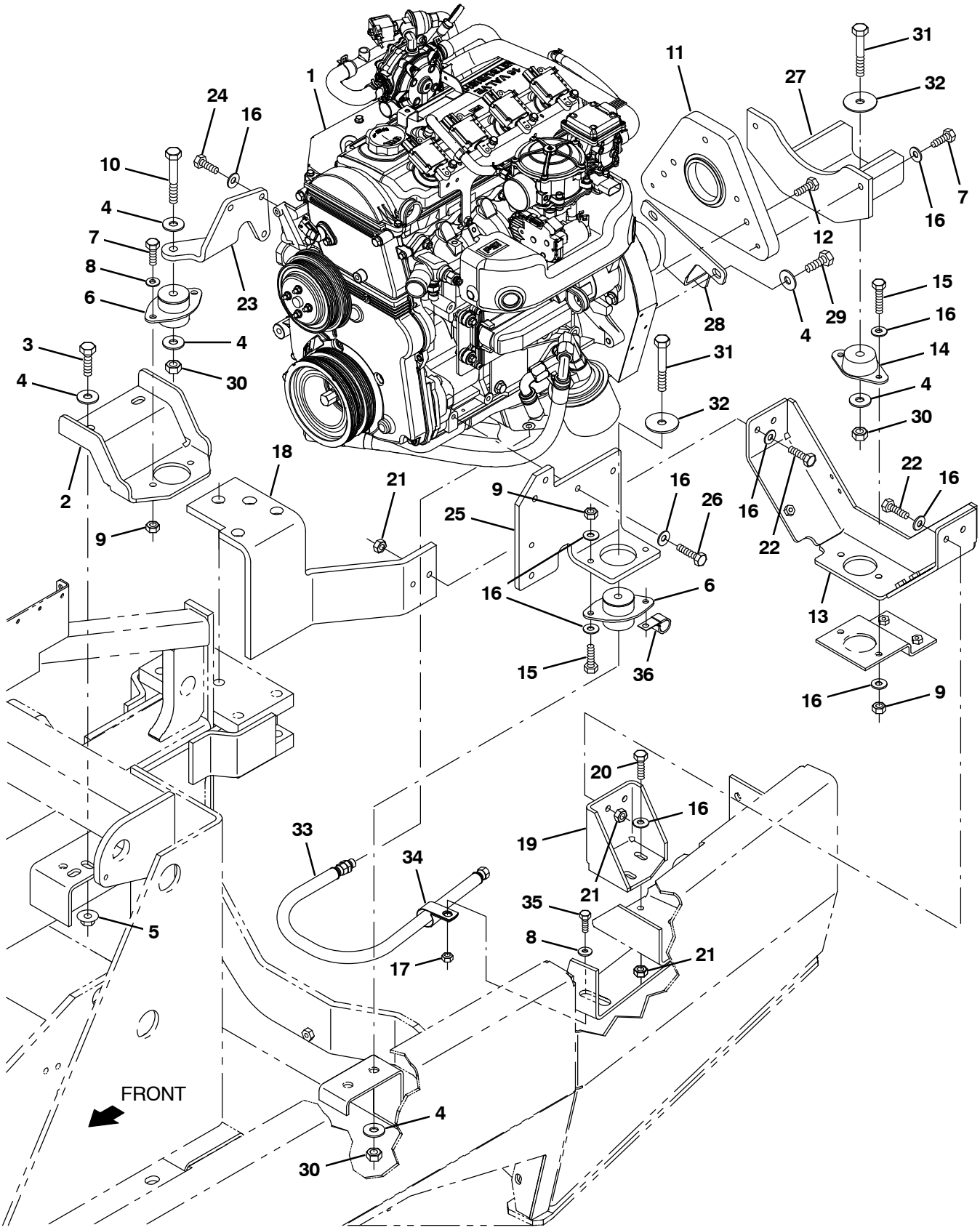

356712 – LP

Fig. 14 – Engine and Mount Group, LPG

Ref.	Part No.	Serial Number	Description	Qty.
1	1075175	(008467–)	Engine Assy, Lpg [4g64, 800 Mit]	1
2	1075040	(008467–)	Bracket Wldt, Mtg, Eng, Front, Rh	1
3	41346	(008467–)	Screw, Hex, M12 X 1.75 X 30, 8.8	2
4	32493	(008467–)	Washer, Flat, 0.56b 1.38d .11, Stl, Pl	8
5	07793	(008467–)	Nut, Hex, Flng, M12 X 1.75	2
6	75768	(008467–)	Isolator, Vib, Flng, 2.0h .5b 2/.41h	2
7	21198	(008467–)	Screw, Hex, .38–16 X 1.25, G5	4
8	32491	(008467–)	Washer, Flat, 0.31, Std	2
9	50902	(008467–)	Nut, Hex, Lock, .38–16, Nl	6
10	06972	(008467–)	Screw, Hex, M12 X 1.75 X 60, 8.8	1
11	1075056	(008467–)	Plate, Adapter, Pump	1
12	07299	(008467–)	Screw, Hex, M10 X 1.25 X 25, 8.8	3
13	1072998	(008467–)	Bracket, Cradle, Rear [800]	1
14	63263	(008467–)	Isolator, Vib, Flng, 1.3h .5b 2/.39h	1
15	36801	(008467–)	Screw, Hex, .38–16 X 1.50, Fl	4
16	32492	(008467–)	Washer, Flat, 0.38, Std	21
17	08709	(008467–)	Nut, Hex, Lock, M8 X 1.25, Nl	1
18	77435	(008467–)	Bracket, Mtg, Eng, Rear, Rh, Dsl	1
19	77434	(008467–)	Bracket, Mtg, Eng, Rear, Lh	1
20	03192	(008467–)	Screw, Hex, M10 X 1.50 X 30, 8.8	2
21	41430	(008467–)	Nut, Hex, Lock, M10 X 1.5, Nl	6
22	39284	(008467–)	Screw, Hex, M10 X 1.50 X 35, 8.8	4
23	1075127	(008467–)	Bracket, Mtg, Eng, Front, Rh [800 Mits]	1
24	07299	(008467–)	Screw, Hex, M10 X 1.25 X 25, 8.8	3
25	1075067	(008467–)	Bracket Wldt, Mtg, Eng, Lh [800 Mits]	1
26	33612	(008467–)	Screw, Hex, M10 X 1.25 X 35, 8.8	2
27	1014411	(008467–)	Channel Wldt, Mtg, Eng, Rear	1
28	1075050	(008467–)	Bracket, Isolator	1
29	41345	(008467–)	Screw, Hex, M12 X 1.75 X 25, 8.8	2
30	08711	(008467–)	Nut, Hex, Lock, M12 X 1.75, Nl	1
31	06973	(008467–)	Screw, Hex, M12 X 1.75 X 70, 8.8	1
32	57048	(008467–)	Washer, Flat, 0.53b 2.13d .11, Stl, Pl	2
33	9015930	(008467–)	Hose, Drain, Oil [2.4 Mit]	1
34	58366	(008467–)	Clamp, Cable, Stl, 1.25d X 1.00w, 1hole	1
35	16931	(008467–)	Screw, Hex, M8 X 1.25 X 20, 8.8	1
36	30407	(008467–)	Clip, Keeper, Open	1

Fig. 15 – Engine Air Cleaner Group, Gas

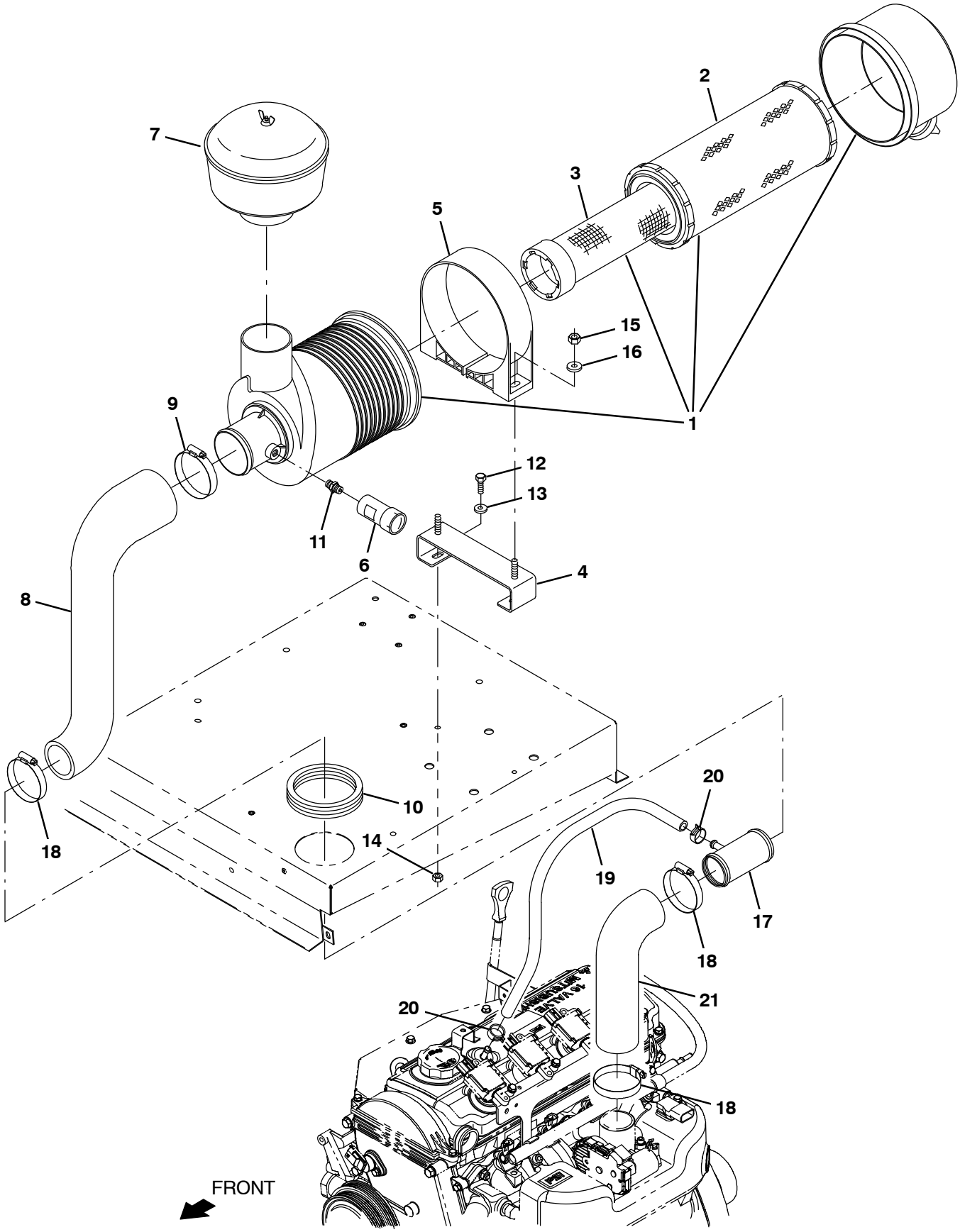

356715 – Gas

Fig. 15 – Engine Air Cleaner Group, Gas

	Ref.	Part No.	Serial Number		Description	Qty.
▽	1	1013344	(008467–	)	Filter Assy, Air, 3.0 Inlet	1
▲	2	372652	(008467–	)	Element, Fltr, Air [Dn]	1
▲	3	372651	(008467–	)	Element, Fltr, Air	1
	4	1073802	(008467–	)	Bracket, Stand–Off, Fltr, Air [800 B/Gr]	1
	5	1013366	(008467–	)	Strap, Mtg, Fltr, Air, 7.17id	1
	6	03026	(008467–	)	Indicator, Service, Fltr, Air [20h20 Dn]	1
	7	75666	(008467–	)	Filter, Air, Pre–Cleaner, A/C	1
	8	1075198	(008467–	)	Hose, Intake, Mold [4g64, Mit]	1
	9	1067656	(008467–	)	Clamp, Hose, Wormdrive, 3.25–4.00d, .50w	1
	10	380591	(008467–	)	Grommet, Rbr, 3.25id, F/3.5h, .06 Matl	1
	11	51560–5	(008467–	)	Fitting, Brs, Str, Pm02, Service	1
	12	06949	(008467–	)	Screw, Hex, M6 X 1.00 X 50, 8.8	2
	13	19066	(008467–	)	Washer, Flat, 0.25b 0.56d .05, Pl, 10	2
	14	07791	(008467–	)	Nut, Hex, Flng, M8 X 1.25	2
	15	08709	(008467–	)	Nut, Hex, Lock, M8 X 1.25, Nl	2
	16	32491	(008467–	)	Washer, Flat, 0.31, Std	2
	17	1070833	(008467–	)	Tube Wldt, Tee [Mit 2013]	1
	18	22297	(008467–	)	Clamp, Hose, Wormdrive, 1.56–2.50d, .50w	3
	19	393373	(008467–	)	Hose, Heater, 0.62id, 024.0l	1
	20	1011899	(008467–	)	Clamp, Hose, Spring Stl, 0.86d X 0.38w	2
	21	1075196	(008467–	)	Hose, Intake, Mold [4g64 Gas, Mit]	1

Fig. 16 – Engine Air Cleaner Group, LPG

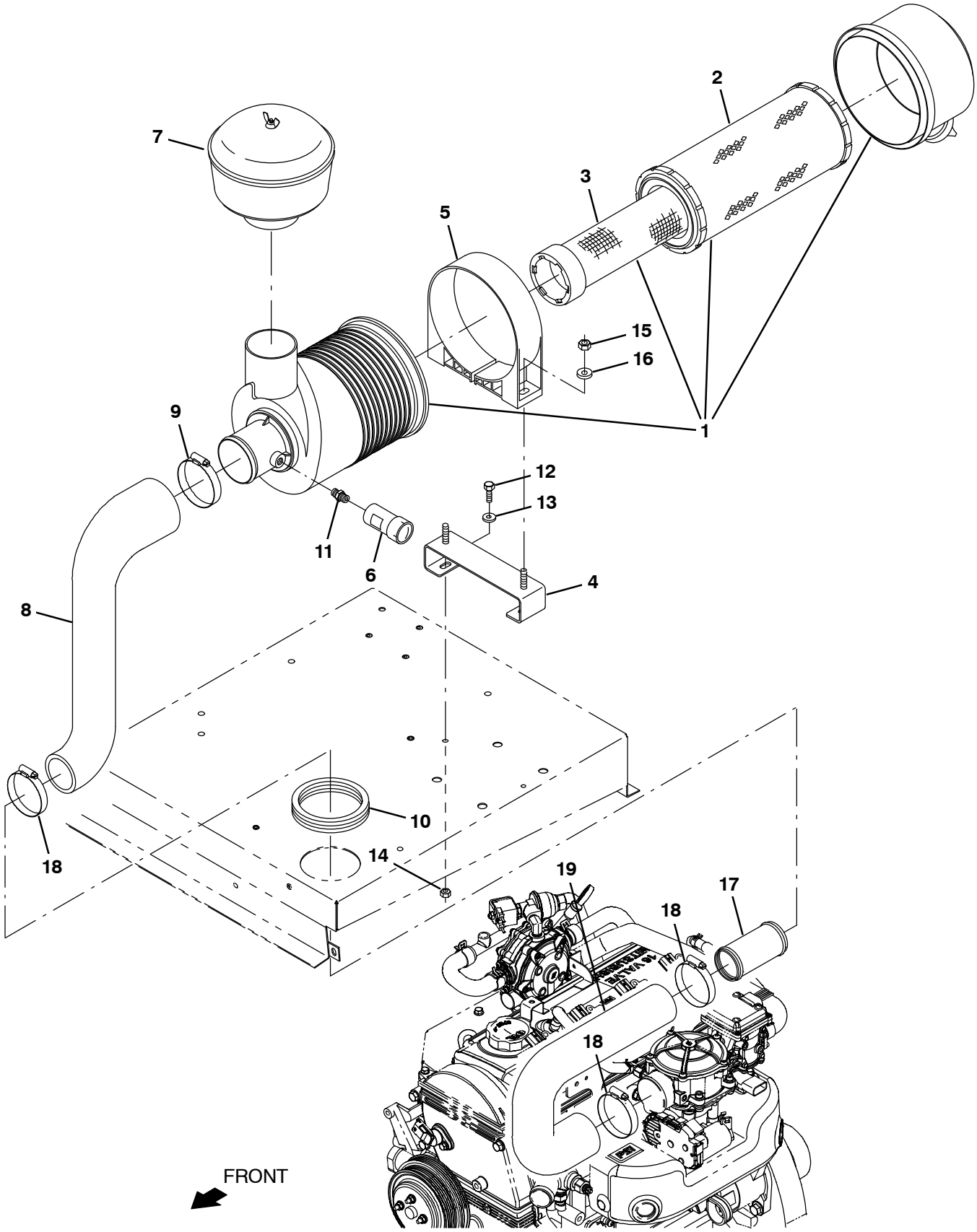

356716 – LP

Fig. 16 – Engine Air Cleaner Group, LPG

	Ref.	Part No.	Serial Number		Description	Qty.
▽	1	1013344	(008467–	)	Filter Assy, Air, 3.0 Inlet	1
▲	2	372652	(008467–	)	Element, Fltr, Air [Dn]	1
▲	3	372651	(008467–	)	Element, Fltr, Air	1
	4	1073802	(008467–	)	Bracket, Stand–Off, Fltr, Air [800 B/Gr]	1
	5	1013366	(008467–	)	Strap, Mtg, Fltr, Air, 7.17id	1
	6	03026	(008467–	)	Indicator, Service, Fltr, Air [20h20 Dn]	1
	7	75666	(008467–	)	Filter, Air, Pre–Cleaner, A/C	1
	8	1075198	(008467–	)	Hose, Intake, Mold [4g64, Mit]	1
	9	1067656	(008467–	)	Clamp, Hose, Wormdrive, 3.25–4.00d, .50w	1
	10	380591	(008467–	)	Grommet, Rbr, 3.25id, F/3.5h, .06 Matl	1
	11	51560–5	(008467–	)	Fitting, Brs, Str, Pm02, Service	1
	12	06949	(008467–	)	Screw, Hex, M6 X 1.00 X 50, 8.8	2
	13	19066	(008467–	)	Washer, Flat, 0.25b 0.56d .05, Pl, 10	2
	14	07791	(008467–	)	Nut, Hex, Flng, M8 X 1.25	2
	15	08709	(008467–	)	Nut, Hex, Lock, M8 X 1.25, Nl	2
	16	32491	(008467–	)	Washer, Flat, 0.31, Std	2
	17	1075026	(008467–	)	Tube, Manifold, Air, Lpg [800 Mit]	1
	18	22297	(008467–	)	Clamp, Hose, Wormdrive, 1.56–2.50d, .50w	3
	19	1070787	(008467–	)	Hose, Intake, Mold, Lpg [Epdm Mit2013]	1

Fig. 17 – Engine Alternator Group

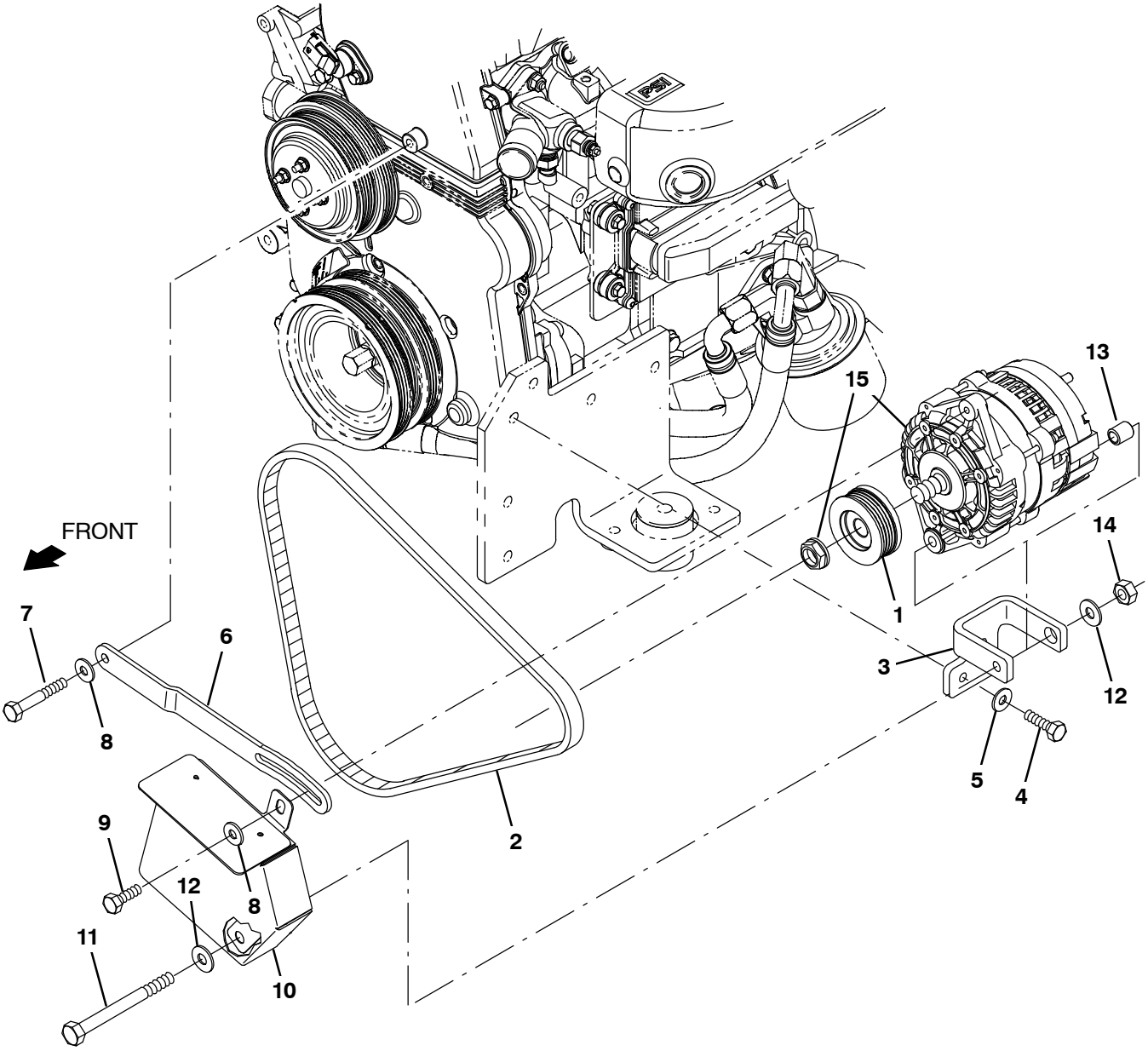

356713 – G, LP

Fig. 17 – Engine Alternator Group

Ref.	Part No.	Serial Number	Description	Qty.
1	1075121	(008467–)	Sheave, Alt, 4grv, 02.6d [800 Mit]	1
2	1075137	(008467–)	Belt, V, 4grv, Pk, 43.0l	1
3	1075065	(008467–)	Bracket, Alternator [800 Mits]	1
4	76570	(008467–)	Screw, Hex, M8 X 1.25 X 30, 8.8	2
5	32491	(008467–)	Washer, Flat, 0.31, Std	2
6	1075126	(008467–)	Bracket, Adj, Alternator [800 Mits]	1
7	39279	(008467–)	Screw, Hex, M8 X 1.25 X 70, 8.8	1
8	32490	(008467–)	Washer, Flat, 0.25, Std	2
9	39277	(008467–)	Screw, Hex, M8 X 1.25 X 25, 8.8	1
10	1075094	(008467–)	Guard Wldt, Belt [Alt, 800 Mit]	1
11	34877	(008467–)	Screw, Hex, M10 X 1.50 X 100, 8.8	1
12	32492	(008467–)	Washer, Flat, 0.38, Std	2
13	1075064	(008467–)	Spacer, Alt, .40b X .63d X .75l	1
14	41430	(008467–)	Nut, Hex, Lock, M10 X 1.5, Nl	1
15	9015891	(008467–)	Alternator, 95a	1
16	57773	(008467–)	Cable, 06ga 13.0l Blk .38ring /.38ring	1
17	32491	(008467–)	Washer, Flat, 0.31, Std	1
18	16735	(008467–)	Screw, Hex, M8 X 1.25 X 16, 8.8	1
19	41141	(008467–)	Washer, Lock, Int–Ext, 0.31	1
20	41142	(008467–)	Washer, Lock, Int–Ext, 0.38	1

Fig. 18 – Engine Muffler Group

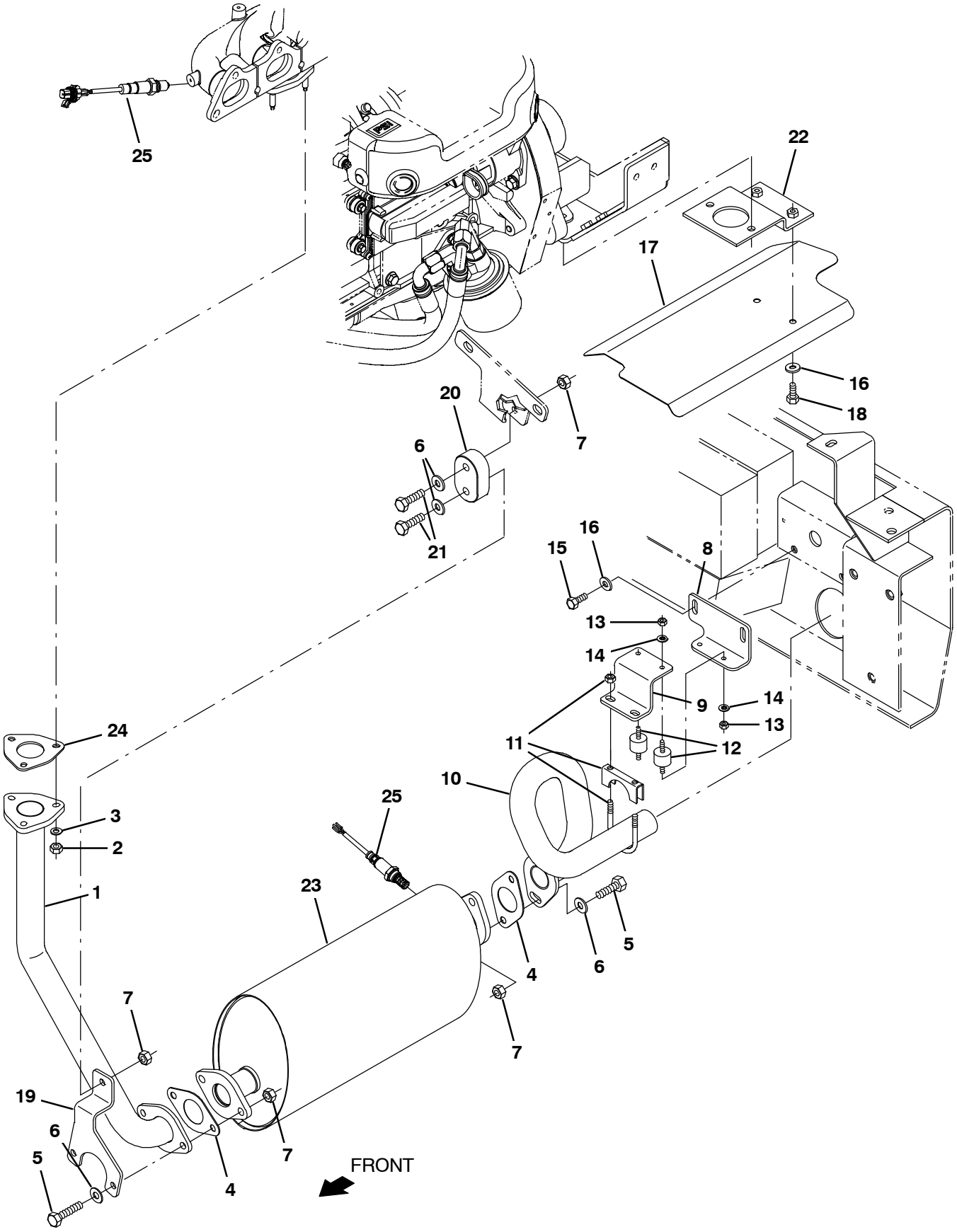

356714 – G, LP

Fig. 18 – Engine Muffler Group

Ref.	Part No.	Serial Number	Description	Qty.
1	1075028	(008467–)	Pipe, Exhaust, Flex [800 Mit]	1
2	08165	(008467–)	Nut, Hex, Stover, M8	3
3	39349	(008467–)	Washer, Flat, 0.31, Sae	3
4	1011216	(008467–)	Gasket, Exhaust, .07, 1.63id, 2/3.4bc	2
5	39285	(008467–)	Screw, Hex, M10 X 1.50 X 40, 8.8	4
6	32492	(008467–)	Washer, Flat, 0.38, Std	6
7	08166	(008467–)	Nut, Hex, Stover, M10 X 1.50	6
8	1075449	(008467–)	Bracket, Angle, Tailpipe [800 Mit]	1
9	1075450	(008467–)	Bracket, Z, Tailpipe [800 Mit]	1
10	1075099	(008467–)	Pipe, Exhaust, Rear [800 Mit]	1
11	24012	(008467–)	Clamp, Muffler, 1.62d	1
12	82661	(008467–)	Isolator, Vib, Ring, 1.0d .25–20/.25–20	2
13	19312	(008467–)	Nut, Hex, Std, .25–20	4
14	32982	(008467–)	Washer, Lock, Int, 0.25	4
15	39277	(008467–)	Screw, Hex, M8 X 1.25 X 25, 8.8	2
16	32491	(008467–)	Washer, Flat, 0.31, Std	4
17	1028836	(008467–)	Shield, Heat	1
18	16931	(008467–)	Screw, Hex, M8 X 1.25 X 20, 8.8	2
19	1075047	(008467–)	Bracket, Mtg, Muffler [800 Mits]	1
20	1013031	(008467–)	Isolator, Rbr	1
21	06962	(008467–)	Screw, Hex, M10 X 1.5	1
22	1028835	(008467–)	Bracket, Mtg, Heat Shield	1
23	1071376	(008467–)	Muffler, Catalytic [Mit 2.0l 2013]	1
24	9016147	(008467–)	Gasket, Exhaust, Manifold, [800 Mit]	1
25	1028558	(008467–)	Sensor, Oxygen	2

Fig. 19 – Engine Fuel Tank Group, Gas

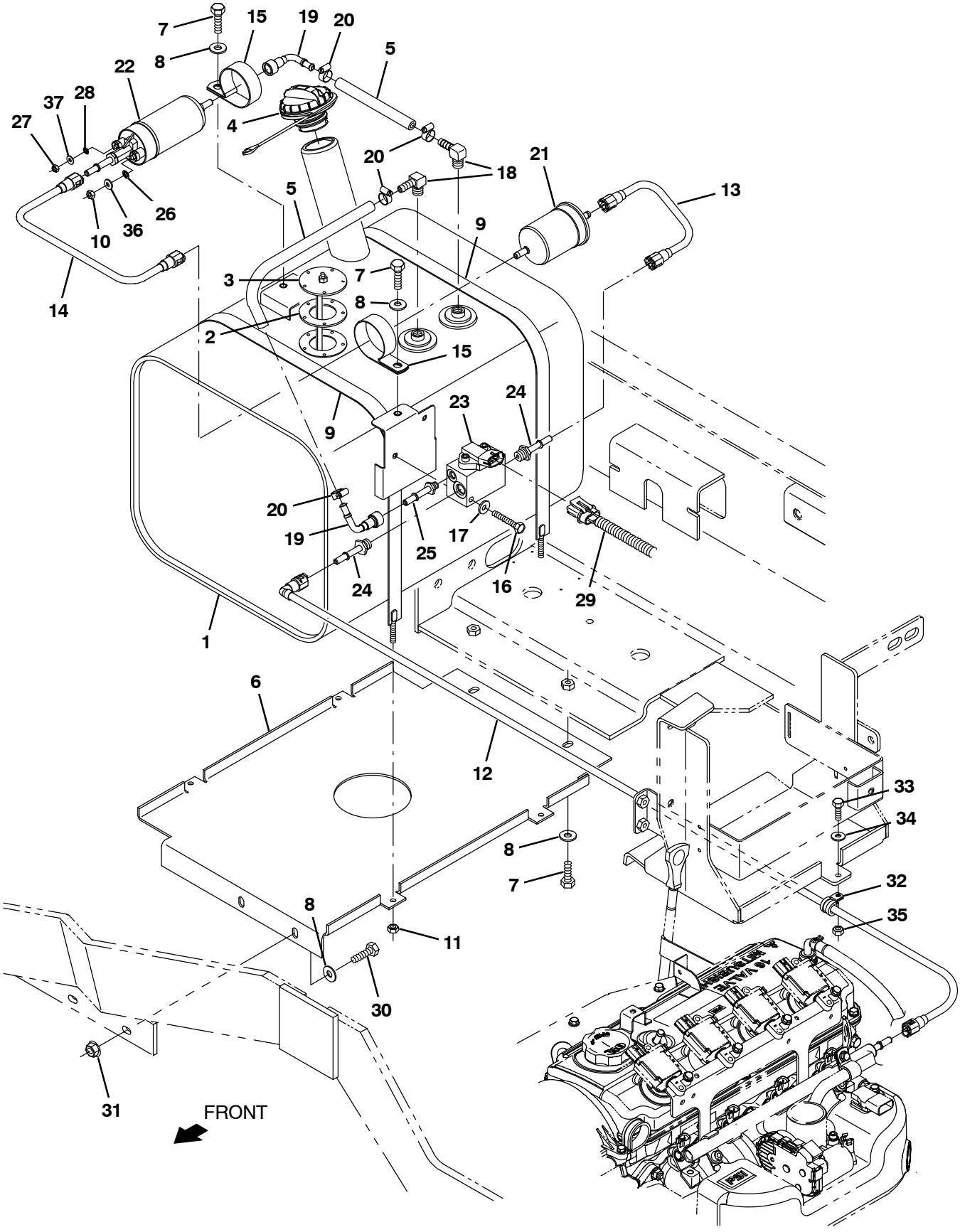

356720 – G

Fig. 19 – Engine Fuel Tank Group, Gas

	Ref.	Part No.	Serial Number	Description	Qty.
▽	1	1029502	(008467–)	Tank, Fuel, 14.0gal, 14.66w 13.0hi 19.0l	1
▲	2	1033897	(008467–)	Gasket, Sender, Fuel	1
▲	3	1033899	(008467–)	Send–Unit, Fuel [800/810 2007]	1
▲	4	1032812	(008467–)	Cap, Fuel, Tank	1
	5	1033746	(008467–)	Hose, Fuel, 0.31id [Evap Emission 07]	1
	6	70477	(008467–)	Plate, Mtg, Tank, Gas	1
	7	16931	(008467–)	Screw, Hex, M8 X 1.25 X 20, 8.8	4
	8	32491	(008467–)	Washer, Flat, 0.31, Std	6
	9	87396	(008467–)	Strap Wldt, Tank, 0.06 1.0w 37.7l	2
	10	50335	(008467–)	Nut, Hex, Std, M5 X 0.80, 8	4
	11	32981	(008467–)	Nut, Hex, Lock, .25–20, Nl	4
	12	1075130	(008467–)	Fuelline, .31d E90/Str, Plstc	1
	13	1013509	(008467–)	Fuelline, .31d Str/Str, Plstc [8200]	1
	14	1034676	(008467–)	Fuelline, .31d Str/Str,Plstc[M20/T20 07]	1
	15	1011895	(008467–)	Clamp, Cable, Stl, 2.00d X 0.75w, 1hole	2
	16	06949	(008467–)	Screw, Hex, M6 X 1.0 X 50, 8.8	2
	17	32490	(008467–)	Washer, Flat, 0.25, Std	2
	18	9000355	(008467–)	Fitting, Brs, E90, Em05/Pm04	2
	19	1019939	(008467–)	Connector, Fuel, E90, Qf	2
	20	43844	(008467–)	Clamp, Hose, Wormdrive, 0.25–0.62d, .31w	4
	21	372440	(008467–)	Filter, Fuel [Gm 1.6l/3.0l]	1
	22	9016183	(008467–)	Pump, Fuel [800 Mit]	1
	23	1028924	(008467–)	Manifold, Gas, Relief, Valve	1
	24	1029293	(008467–)	Fitting, Fuel, Str, 0.56–18 [07 Eng]	2
	25	1029295	(008467–)	Fitting, Fuel, Str, 0.38–24 [07 Eng]	1
	26	32980	(008467–)	Washer, Lock, Int, #10	1
	27	42368	(008467–)	Nut, Hex, Std, M4 X 0.70, 8	1
	28	32978	(008467–)	Washer, Lock, Int, #08	1
	29	385009	(008467–)	Harness, Eng	1
	30	39277	(008467–)	Screw, Hex, M8 X 1.25 X 25, 8.8	2
	31	07791	(008467–)	Nut, Hex, Flng, M8 X 1.25	2
	32	1016354	(008467–)	Clamp, Cable, Ss, 0.50d X 0.50w [Insul]	1
	33	06944	(008467–)	Screw, Hex, M6 X 1.00 X 25, 8.8	1
	34	32490	(008467–)	Washer, Flat, 0.25, Std	1
	35	08708	(008467–)	Nut, Hex, Lock, M6 X 1.00, Nl	1
	36	19066	(008467–)	Washer, Flat, 0.25b 0.56d .05, Pl, 10	1
	37	19065	(008467–)	Washer, Flat, 0.19b 0.44d .05, Pl, 08	1

Fig. 20 – Engine Fuel Tank Group, LPG

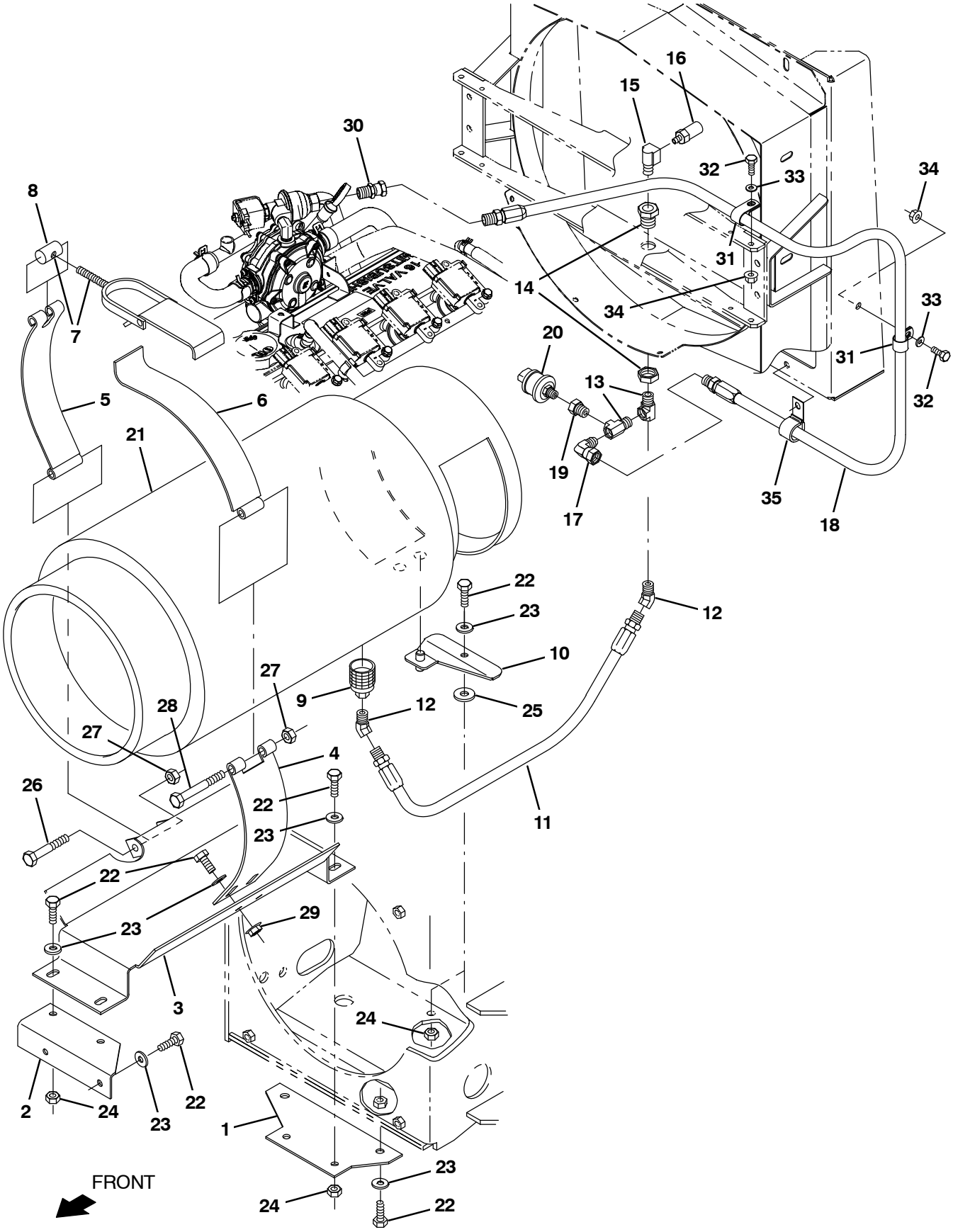

356721 – LP

Fig. 20 – Engine Fuel Tank Group, LPG

	Ref.	Part No.	Serial Number		Description	Qty.
	1	70718	(008467–	)	Plate, Mtg	1
	2	70719	(008467–	)	Angle, Mtg	1
	3	70435	(008467–	)	Bracket Wldt, Tank, Lpg	1
	4	58589	(008467–	)	Strap, Mtg.– Lp Tank	1
	5	58590	(008467–	)	Strap, Tank Retainer – Lp	1
	6	57297	(008467–	)	Strap, Hinge – Lp Tank Mtg	1
▽	7	53400–1	(008467–	)	Latch Assy, Lpg Tank Mtg,W/Nut	1
▲	8	53400–4	(008467–	)	Nut, Adjustable, Lpg Tank Mtg	1
	9	26496	(008467–	)	Coupling,Quickdisc, Lpg, Shwd	1
	10	74089	(008467–	)	Plate Wldt.	1
	11	374158	(008467–	)	Hose, Lpg, Med05, Pm04str/Sm04str, 46.0l	1
	12	47720	(008467–	)	Fitting, Hyd, E45, Pm04/Pf04	2
	13	56976A	(008467–	)	Fitting, Hyd, Tee, Npt 04Pm– 04Pf– 04Pf	2
	14	78122	(008467–	)	Fitting,Bulkhead .25Npt Wh W21204	1
	15	27048	(008467–	)	Fitting, Brs, E90, Pf04/Pm04	1
	16	24047	(008467–	)	Valve, Press Relief, Lpg Rego	1
	17	11442–1	(008467–	)	Fitting, Hyd, E90, Swivel Pf04/Pm04	2
	18	22308–1	(008467–	)	Hose, Lpg, Med05, Pm04str/Sm04str, 060.0	1
	19	17414	(008467–	)	Fitting, Pipe, Str, Pm04/Pf02	1
	20	23156	(008467–	)	Switch, Press, 12vdc 08a Spst Nc 0070psi	1
	21	24928–1	(008467–	)	Tank–Lp, 33#,Liq,Both,Fill Ga	1
	22	16931	(008467–	)	Screw, Hex, M8 X 1.25 X 20, 8.8	9
	23	32491	(008467–	)	Washer, Flat, 0.31, Std	9
	24	08709	(008467–	)	Nut, Hex, Lock, M8 X 1.25, Nl	7
	25	43611	(008467–	)	Washer, Flat, 0.39b 0.75d .06, Nyl	1
	26	35707	(008467–	)	Screw, Hex, .38–16 X 3.00, G5	1
	27	50902	(008467–	)	Nut, Hex, Lock, .38–16, Nl	2
	28	20177	(008467–	)	Screw, Hex, .38–16 X 4.00, G5	1
	29	07791	(008467–	)	Nut, Hex, Flng, M8 X 1.25	2
	30	11442–23	(008467–	)	Fitting, Pipe, Str, Pm04/Sf04	1
	31	67767	(008467–	)	Clamp, Cable, Stl, 0.69d X 0.62w, 1hole	2
	32	06942	(008467–	)	Screw, Hex, M6 X 1.0 X 16, 8.8	2
	33	19066	(008467–	)	Washer, Flat, #10	2
	34	07790	(008467–	)	Nut, Hex, Flng, M6 X 1.00	2
	35	30407	(008467–	)	Clip, Keeper, Open	1

Fig. 21 – Engine Radiator Mount Group

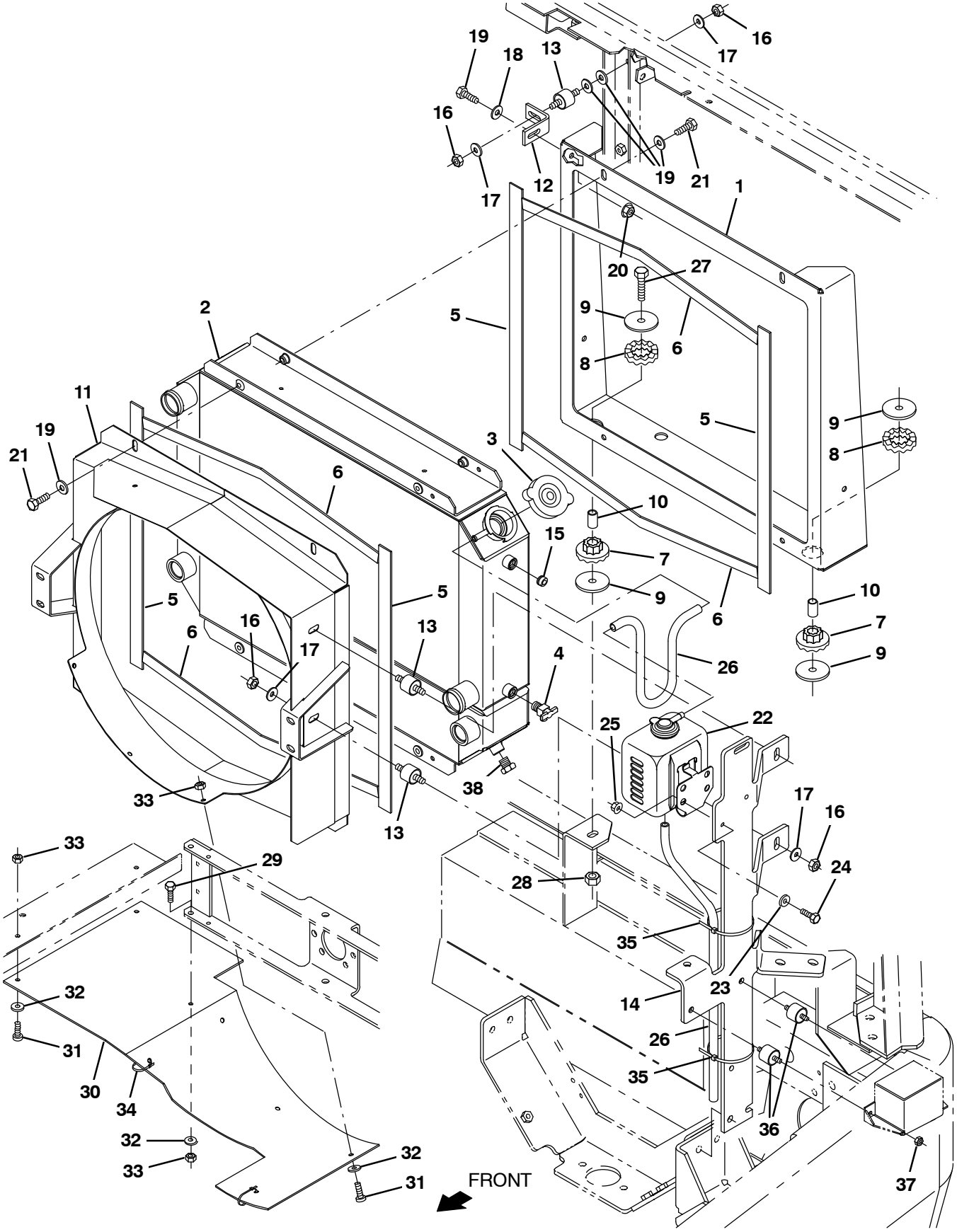

356717 – G, LP

Fig. 21 – Engine Radiator Mount Group

Ref.	Part No.	Serial Number	Description	Qty.
1	1075096	(008467–)	Duct, Radiator, Rear	1
2	1075006	(008467–)	Radiator, W/ Hyd Cooler [800]	1
3	1265988	(008467–)	Cap, Radiator, 16psi, Sae J164	1
4	51305	(008467–)	Fitting, Draincock, E90, .25npt	1
5	1075361	(008467–)	Seal, Epdm, .50, 01.00w 19.00l, Adh	4
6	1075362	(008467–)	Seal, Epdm, .50, 0.75w 20.00l, Adh	4
7	64621	(008467–)	Bushing, Isolator	2
8	64618	(008467–)	Ring, Isolator, Outer Rbr	2
9	58228	(008467–)	Washer, Flat, 0.44b 2.00d .12, Stl, Pl	4
10	77452	(008467–)	Spacer	2
11	1075044	(008467–)	Shroud Wldt, Fan, Radiator [800 Mit]	1
12	375511	(008467–)	Bracket, L, 2.20,2.00, .18T,1.	1
13	51322	(008467–)	Isolator–Vibration .31–18	3
14	9001554	(008467–)	Bracket, Mtg, Fltr, Oil, W/Label [800l]	1
15	02247	(008467–)	Fitting, Plug	1
16	19313	(008467–)	Nut, Hex, Std, .31–18	6
17	41186	(008467–)	Washer, Belleville, .31	7
18	39277	(008467–)	Screw, Hex, M8 X 1.25 X 25, 8.8	1
19	32491	(008467–)	Washer, Flat, 0.31 Std	14
20	07791	(008467–)	Nut, Hex, Flng, M8 X 1.25	1
21	16931	(008467–)	Screw, Hex, M8 X 1.25 X 20, 8.8	9
22	1023853	(008467–)	Tank, Coolant, 04.7 03.3 4.7deep, 1liter	1
23	06943	(008467–)	Screw, Hex, M6 X 1.0 X 20, 8.8	2
24	19066	(008467–)	Washer, Flat, #10	2
25	07790	(008467–)	Nut, Hex, Flng, M6 X 1.0	2
26	1014843	(008467–)	Hose, Afmkt, Coolant Recvy, 05ft	1
27	27990	(008467–)	Screw, Hex, .38–16 X 2.00, 5	2
28	50902	(008467–)	Nut, Hex, Lock, .38–16, Nl	2
29	06943	(008467–)	Screw, Hex, M6 X 1.00 X 20, 8.8	1
30	1055893	(008467–)	Skirt, Cooling Fan [800/810]	1
31	09145	(008467–)	Screw, Pan, Phl, M6 X 1.00 X 16, 4.8	5
32	32490	(008467–)	Washer, Flat, 0.25, Std	6
33	08708	(008467–)	Nut, Hex, Lock, M6 X 1.00, Nl	6
34	763114	(008467–)	Tie, Cable, 11.3l, 2.75d Max	2
35	1074138	(008467–)	Tie, Cable, Nyl, 11.5l .19w, 3.0d Max	2
36	1013588	(008467–)	Isolator, Vib, Ring, 1.0d .25–20/.25–20	2
37	32981	(008467–)	Nut, Hex, Lock, .25–20, Nl	2
38	1234224	(008467–)	Fitting, Pipe, Plug, .12npt, Hex Hd	1

Fig. 22 – Engine Radiator Hose Group

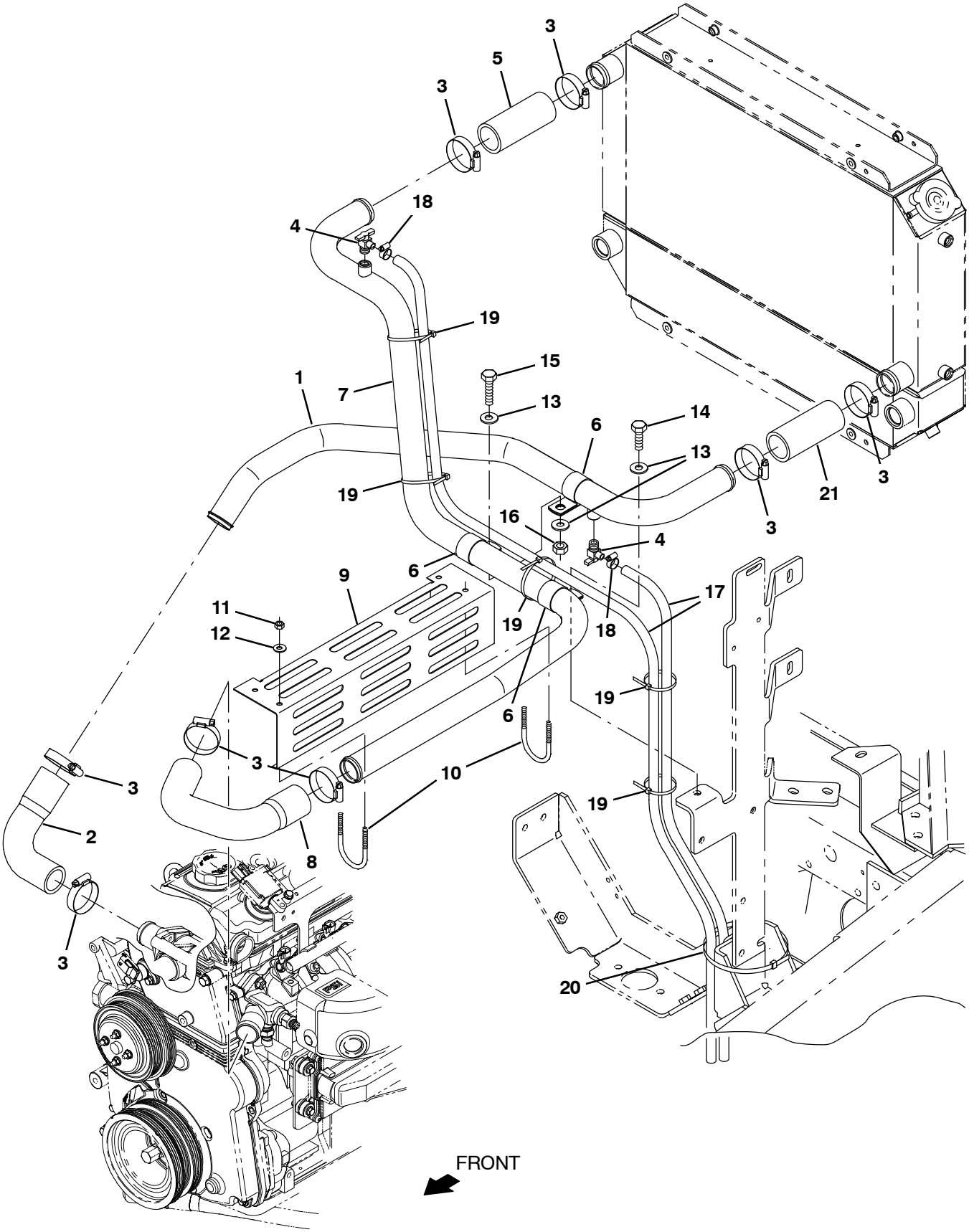

356718 – G, LP

Fig. 22 – Engine Radiator Hose Group

Ref.	Part No.	Serial Number	Description	Qty.
1	1075022	(008467–)	Tube, Coolant, Lower [800 G/Lp Mit]	1
2	1075019	(008467–)	Hose, Coolant, Inlet, Mold [800 Mit]	1
3	79381	(008467–)	Clamp, Hose, Wormdrive, 1.25–2.00d, .50w	8
4	51305	(008467–)	Fitting, Draincock, E90, .25npt	2
5	74944	(008467–)	Hose, Rbr, 1.50id 1.88od 04.5l	1
6	53468	(008467–)	Clamp, Cable, Stl, 1.75d X 1.00w, 1hole	1
7	1075018	(008467–)	Tube, Coolant, Upper [800 G/Lp Mit]	1
8	1075021	(008467–)	Hose, Coolant, Outlet, Mold [800 Mit]	1
9	1231046	(008467–)	Shield, Heat, Upper Coolant Tube	1
10	1232099	(008467–)	Clamp, Tube, U–Bolt, Ss, .25 Thrd, 1.25	2
11	41169	(008467–)	Nut, Hex, Lock, .25–20, Nl, Ss	4
12	386063	(008467–)	Washer, Flat, 0.25b 1.12d .12, Ss	4
13	32492	(008467–)	Washer, Flat, 0.38, Std	3
14	39283	(008467–)	Screw, Hex, M10 X 1.50 X 25, 8.8	1
15	39284	(008467–)	Screw, Hex, M10 X 1.50 X 35, 8.8	1
16	41430	(008467–)	Nut, Hex, Lock, M10 X 1.5, Nl	1
17	1014930	(008467–)	Hose, Afmkt, Pvc, Clr, 0.38id, 08ft	1
18	43844	(008467–)	Clamp, Hose, Wormdrive, 0.25–0.62d, .31w	2
19	1074138	(008467–)	Tie, Cable, Nyl, 11.5l .19w, 3.0d Max	5
20	222809	(008467–)	Tie, Cable, Nyl, 29.8l .30w 9.0 Max D	1
21	1075303	(008467–)	Hose, Rbr, 1.50id 1.88od 05.0l	1

Fig. 23 – Engine Radiator Cooling Fan Group

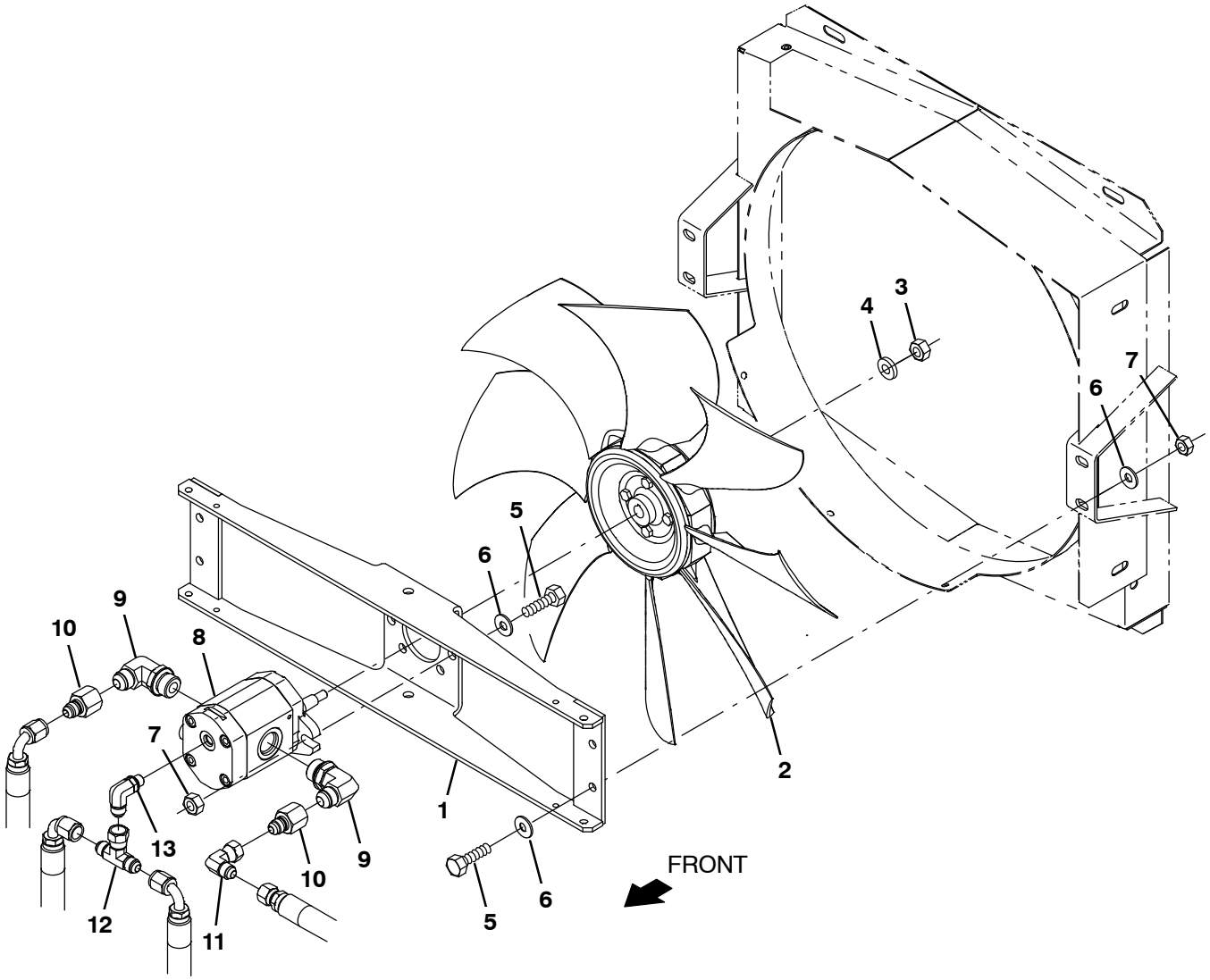

356719 – G, LP

Fig. 23 – Engine Radiator Cooling Group

Ref.	Part No.	Serial Number	Description	Qty.
1	1051599	(008467–)	Bracket Wldt, Mtg, Motor	1
2	1075393	(008467–)	Fan, Cooling, 18.0d, 8 Blade, 0.5b Taper	1
3	74082	(008467–)	Nut, Hex, Std, .31–32, 5	1
4	41186	(008467–)	Washer, Flat, Belleville, .31	1
5	39277	(008467–)	Screw, Hex, M8 X 1.25 X 25, 8.8	6
6	32491	(008467–)	Washer, Flat, 0.31, Std	10
7	08709	(008467–)	Nut, Hex, Lock, M8 X 1.25, Nl	6
8	1071254	(008467–)	Motor, Hyd, Gear, Int 07.6 Bi–Dir 3000	1
9	56821	(008467–)	Fitting, Hyd, E90, Jm08/Om10	2
10	47753	(008467–)	Fitting, Hyd, Str, Jf08/Jm06	2
11	47504	(008467–)	Fitting, Hyd, E90, Jf06/Jm06	1
12	35586	(008467–)	Fitting, Hyd, Tee, Jf06/Jm06/Jm06, Br	1
13	77098	(008467–)	Fitting, Hyd, E90, Jm06/Om04	1

Fig. 24 – Engine Battery Group

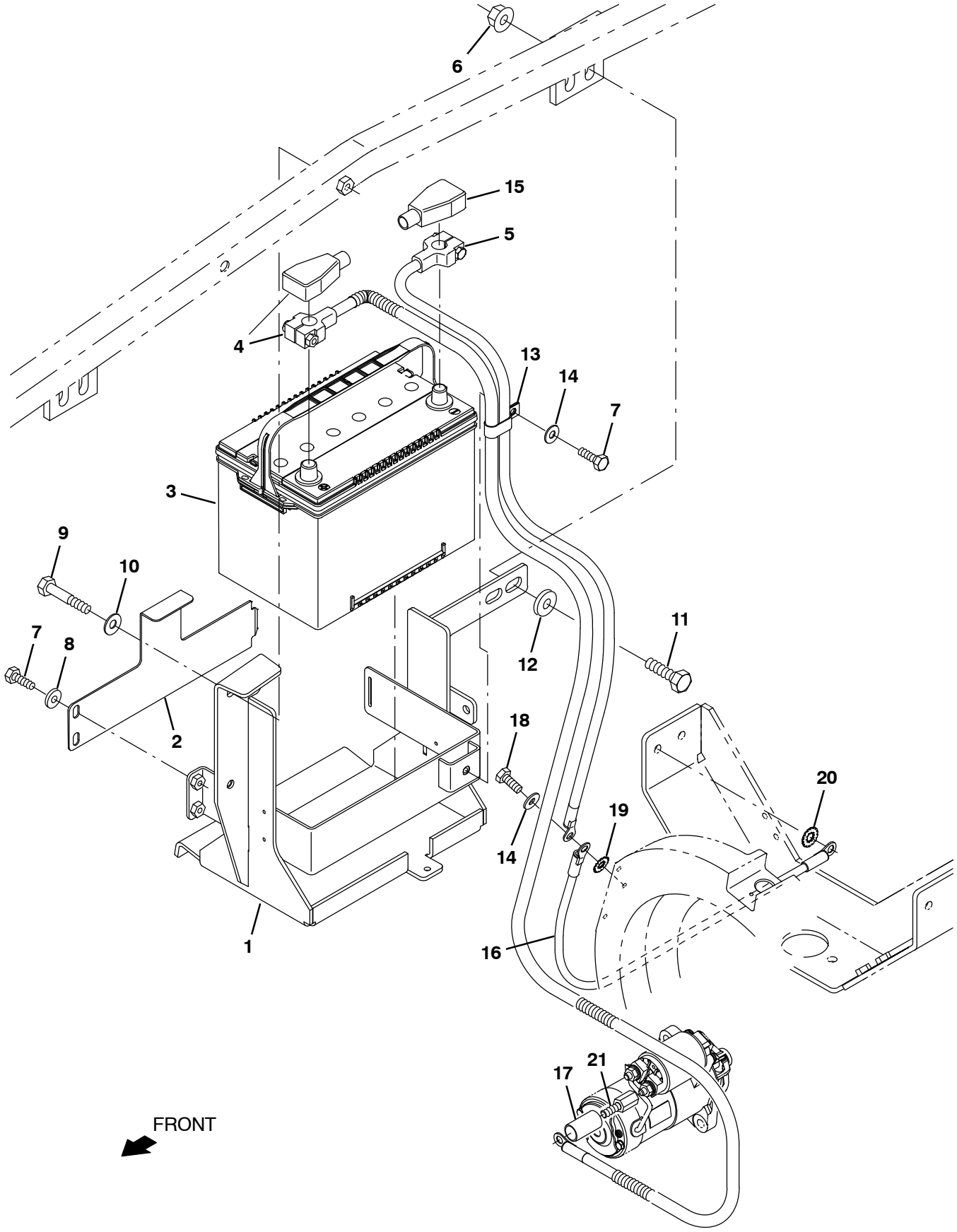

356722 – G, LP

Fig. 24 – Engine Battery Group

Ref.	Part No.	Serial Number	Description	Qty.
1	1075279	(008467–)	Bracket Wldt, Mtg, Battery [800 G/Lp/D]	1
2	1073030	(008467–)	Bracket, Retainer, Battery [800 G/Lp/D]	1
3	1073553	(008467–)	Battery, Wet, 12vdc 1000cca	1
4	68869	(008467–)	Cable, Battery, 02ga 48.0l Red .41ring	1
5	34821	(008467–)	Cable, Battery, 02ga 36.0l Blk .38ring	1
6	07793	(008467–)	Nut, Hex, Flng, M12 X 1.75	2
7	16931	(008467–)	Screw, Hex, M8 X 1.25 X 20, 8.8	3
8	41186	(008467–)	Washer, Flat, Belleville, .31	2
9	06963	(008467–)	Screw, Hex, M10 X 1.5 X 60, 8.8	2
10	32492	(008467–)	Washer, Flat, 0.38, Std	2
11	06969	(008467–)	Screw, Hex, M12 X 1.75 X 40, 8.8	2
12	32486	(008467–)	Washer, Flat, 0.50, Sae	2
13	67366	(008467–)	Clamp, Cable, Stl, 1.0x2.0x0.62w, 1hole	1
14	32491	(008467–)	Washer, Flat, 0.31, Std	2
15	68872	(008467–)	Boot, Terminal, Battery, 02–01ga, Blk	1
16	57773	(008467–)	Cable, 06ga 13.0l Blk .38ring /.38ring	1
17	76207	(008467–)	Sleeve, Heatshrink, 0.75id, 4.0l	1
18	16735	(008467–)	Screw, Hex, M8 X 1.25 X 16, 8.8	1
19	41141	(008467–)	Washer, Lock, Int–Ext, 0.31	1
20	41142	(008467–)	Washer, Lock, Int–Ext, 0.38	1
21	1073387	(008467–)	Stand–Off, Hex, M8 X M8 01.6l, Metal	1

Fig. 25 – Wheel Group, Rear Drive

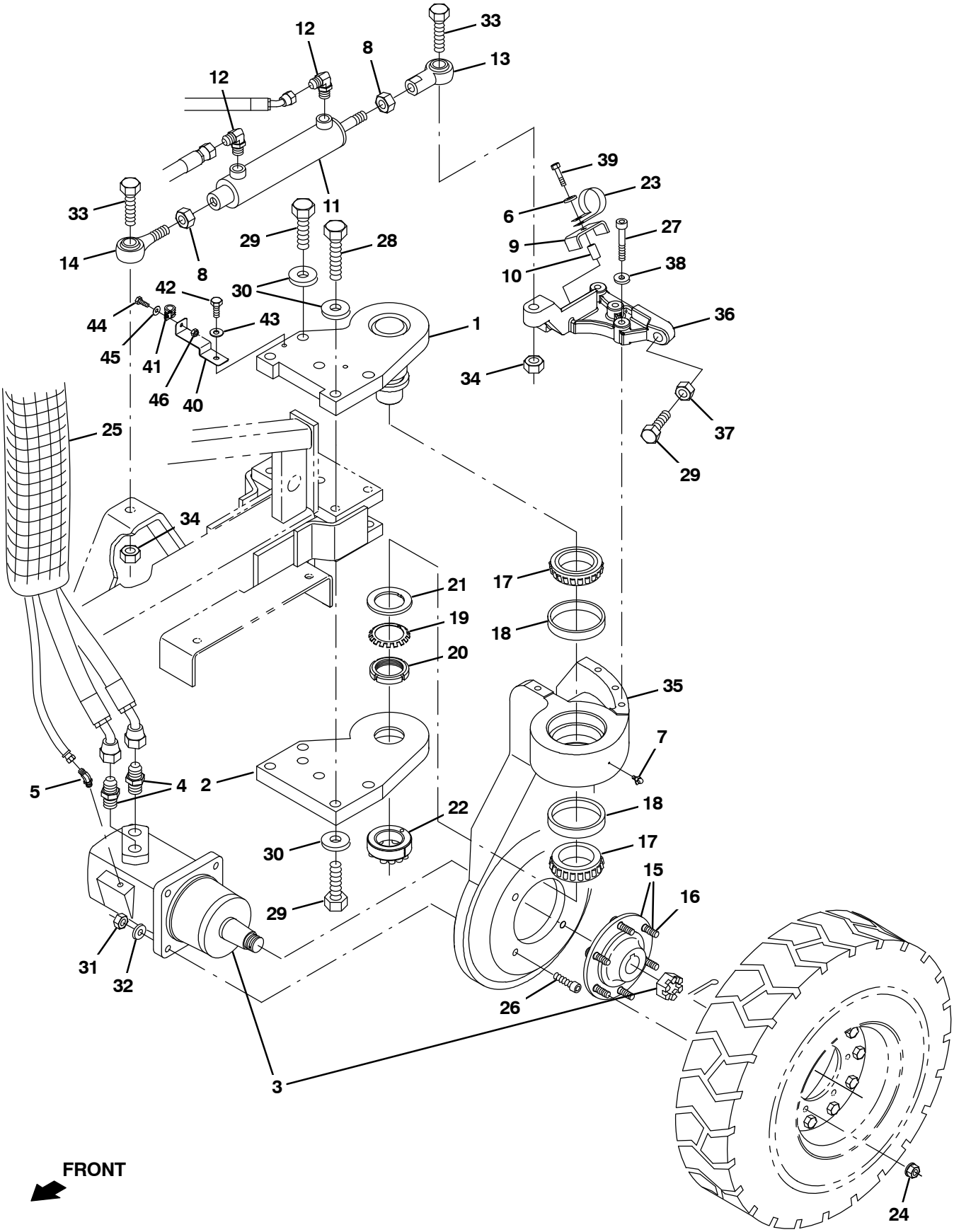

07567 – G, LP

Fig. 25 – Wheel Group, Rear Drive

	Ref.	Part No.	Serial Number		Description	Qty.
	1	63491	(008467–	)	Pivot Wldt, Wheel	1
	2	63471	(008467–	)	Plate, Pivot, Wheel	1
▽	3	1068905	(008467–	)	Motor, Hyd, Gear, Int 29.9 Bi–Dir 3000	1
▲		9013665	(008467–	)	Seal Kit, Front, Shaft	1
	4	79872	(008467–	)	Fitting, Hyd, Str, Fm12/Om16	2
	5	47522	(008467–	)	Fitting, Hyd, E45, Jm06/Om06	1
	6	32491	(008467–	)	Washer, Flat, 0.31, Std	1
	7	09718	(008467–	)	Fitting, Grease.25–28Th 90 .75L	1
	8	43958	(008467–	)	Nut, Hex, Std, .75–16	2
	9	73733	(008467–	)	Channel, Retainer	1
	10	73731	(008467–	)	Sleeve, .375B .62D1.06 Stl	1
	11	1028492	(008467–	)	Cylinder, Hyd, 2.0b 15.0l 08.00strk 1500	1
	12	56820	(008467–	)	Fitting, Hyd, E90 Jm06/Om06	2
	13	64887	(008467–	)	Balljoint, Rod End	1
	14	64886	(008467–	)	Balljoint, Rod End	1
▽	15	79140	(008467–	)	Hub and Stud Assy.	1
▲	16	79152	(008467–	)	Stud, Wheel .56–18x2.13	6
	17	51341	(008467–	)	Bearing–Cone, 2.63Bore 0.87Wth	2
	18	51340	(008467–	)	Bearing–Cup , 4.33Dia 0.74Wth	2
	19	369701	(008467–	)	Washer,Lock Special	1
	20	41073	(008467–	)	Nut,Lock–Special 2.16–18Uns	1
	21	375762	(008467–	)	Washer	1
	22	63496	(008467–	)	Ring, Retainer, Lock	1
	23	67767	(008467–	)	Clamp, Cable	1
	24	79153	(008467–	)	Nut, Wheel Lug	6
	25	82832	(008467–	)	Sleeve, Nyl, 37, 25.0l	1
	26	39305	(008467–	)	Screw, Soc ,.50–13x2.75 Alloypltd	4
	27	375576	(008467–	)	Screw, Soc, M12x1.75 60	4
	28	06995	(008467–	)	Screw, Hex, M20 X 2.5 X 70, 8.8	3
	29	06993	(008467–	)	Screw, Hex, M20 X 2.5 X 60, 8.8	7
	30	39350	(008467–	)	Washer, Flat, 0.75, Sae	10
	31	32985	(008467–	)	Nut, Hex, Lock, .50–13, Nl	4
	32	32486	(008467–	)	Washer, Flat, 0.50, Sae	4
	33	54833	(008467–	)	Screw, Hex, .75–10 X 2.50, G5	2
	34	32987	(008467–	)	Nut, Hex, Lock, .75–10, Nl	2
	35	1071056	(008467–	)	Housing, Sppt, Wheel, Rear	1
	36	1053585	(008467–	)	Bracket, Arm, Steering	1
	37	07783	(008467–	)	Nut, Hex, Std, M20 X 2.50, 8	1
	38	39346	(008467–	)	Washer, Flat, 0.44, Std	4
	39	39278	(008467–	)	Screw, Hex, M8 X 1.25 X 50, 8.8	1
	40	1231057	(008467–	)	Bracket, Mtg, Fuelline [800g]	1
	41	1016354	(008467–	)	Clamp, Cable, Ss, 0.50d X 0.50w [Insul]	1
	42	06961	(008467–	)	Screw, Hex, M10 X 1.5 X 20, 8.8	1
	43	32492	(008467–	)	Washer, Flat, 0.38, Std	1
	44	06944	(008467–	)	Screw, Hex, M6 X 1.00 X 25, 8.8	1
	45	32490	(008467–	)	Washer, Flat, 0.25, Std	1
	46	08708	(008467–	)	Nut, Hex, Lock, M6 X 1.00, Nl	1

Fig. 26 – Wheels and Brakes Group, Front

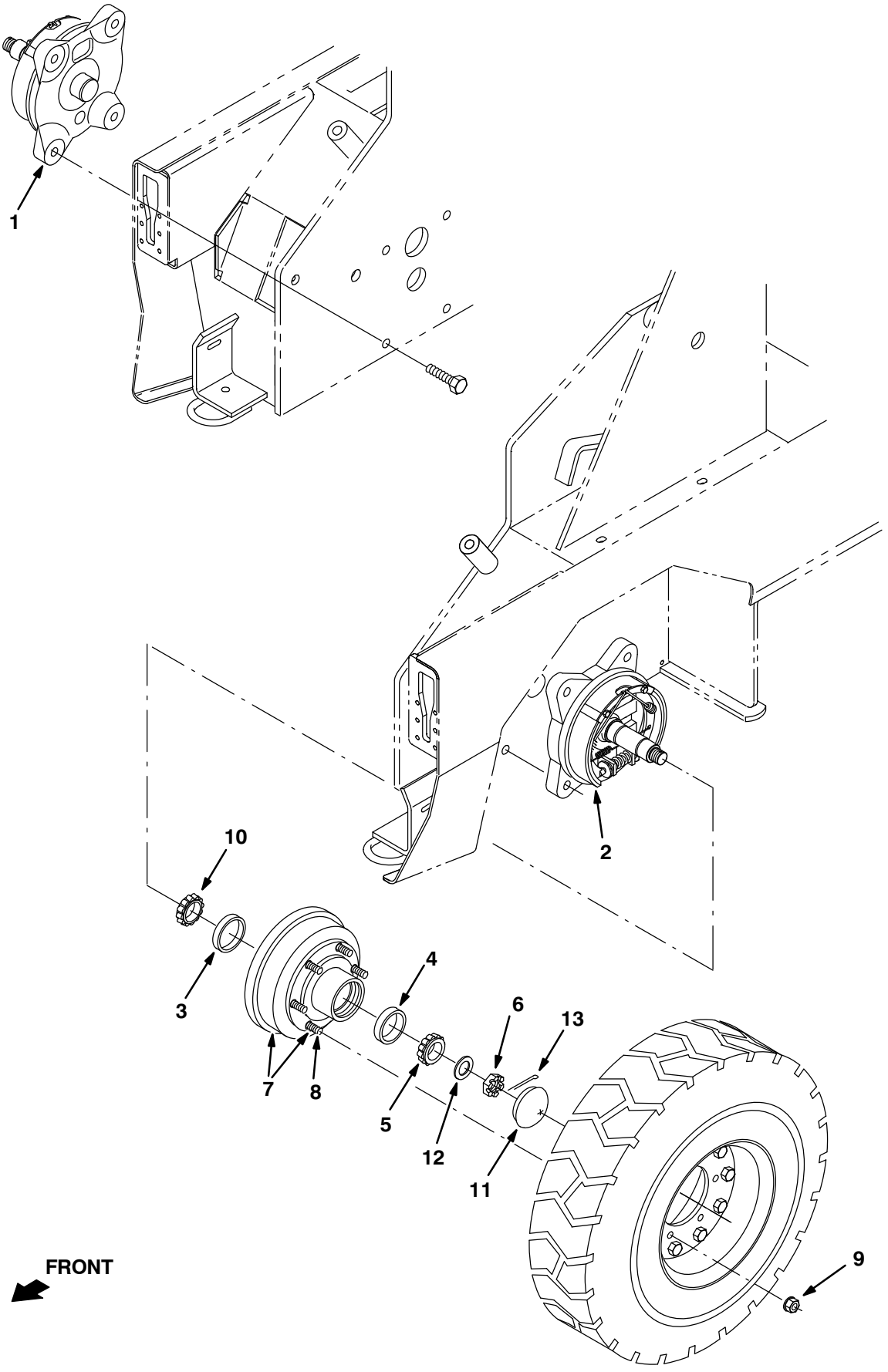

07568 – ALL

Fig. 26 – Wheels and Brakes Group, Front

	Ref.	Part No.	Serial Number		Description	Qty.
	1	77790	(008467–	)	Brake Assy, Rh (See Breakdowns)	1
	2	77770	(008467–	)	Brake Assy, Lh (See Breakdowns)	1
	3	17808	(008467–	)	Bearing–Cup, 2.72Dia 0.59Wth	2
	4	51338	(008467–	)	Bearing–Cup, 2.56Dia 0.55Wth	2
	5	51193	(008467–	)	Bearing–Cone, 1.38Bore 0.72Wth	2
	6	14242	(008467–	)	Nut–Hxslot 1.00–20 Pltd	2
▽	7	79151	(008467–	)	Drum Assy, Brake 9/16	2
▲	8	79152	(008467–	)	Stud, Wheel .56–18x2.13	6
	9	79153	(008467–	)	Nut, Wheel Lug, 9/16–18	12
	10	17809	(008467–	)	Bearing–Cone, 1.50Bore 0.75Wth	2
	11	51373	(008467–	)	Cap, Grease Black Paint	2
	12	32598	(008467–	)	Washer, Flat, 1.02b 1.75d .12, Stl	2
	13	08180	(008467–	)	Pin, Cotter, .125 X 2.00	2

Fig. 27 – Wheel Assembly

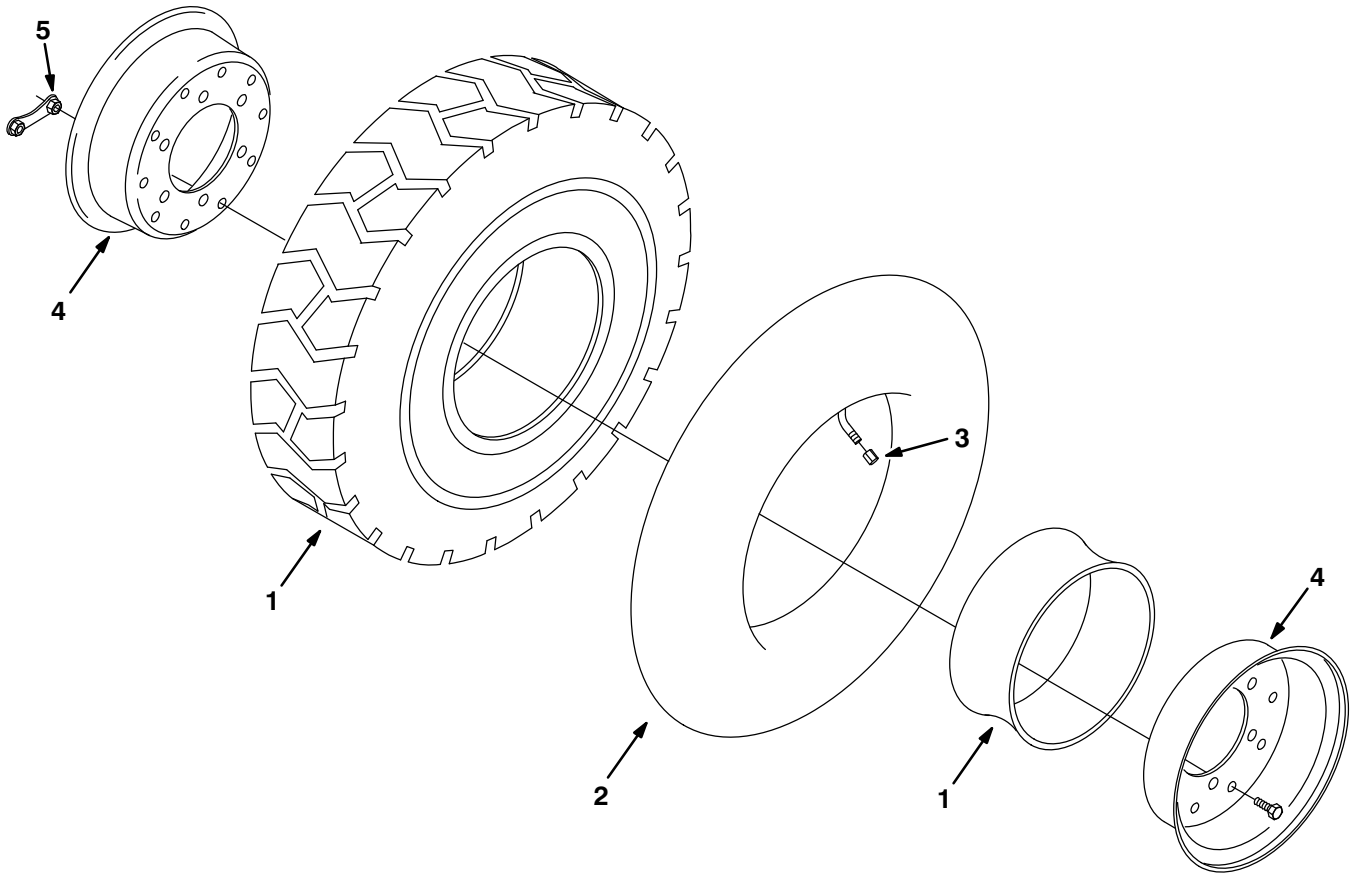

07621 – ALL

Fig. 27 – Wheel Assembly

	Ref.	Part No.	Serial Number		Description	Qty.
▽		1064126	(008467–	)	Tire & Rim Assy, Pneu 6.50–10	3
▲	1	1064125	(008467–	)	Tire & Flap Assy	1
▲	2	64058	(008467–	)	Tube, Inner	1
▲	3	45786	(008467–	)	Cap, Valve Stem	1
▲	4	21672	(008467–	)	Hub Assy	1
	5	21259	(008467–	)	Plate Wldt, Wheel Lock (CE Only)	6

Fig. 28 – Brake Pedals Group

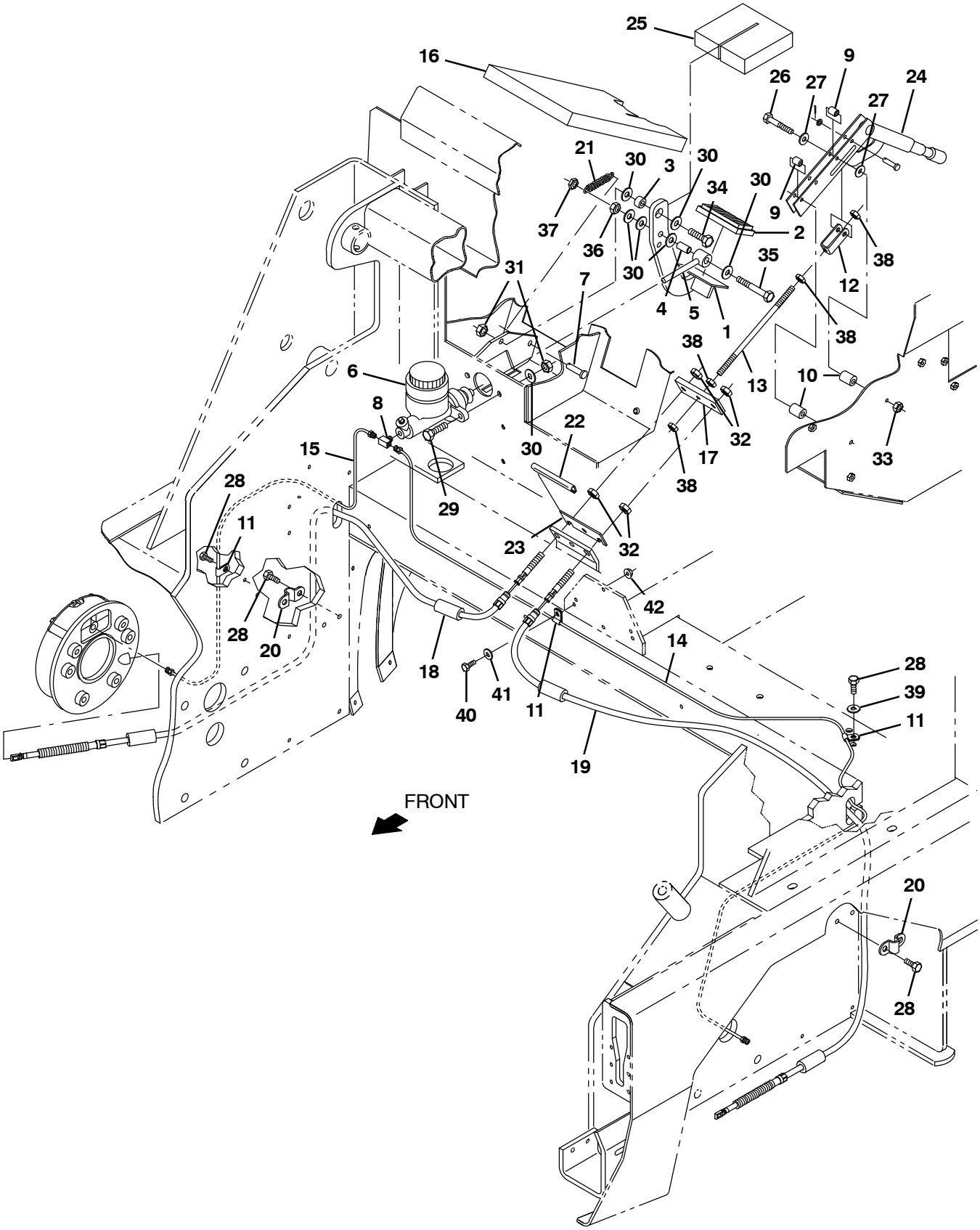

07602 – G, LP

Fig. 28 – Brake Pedals Group

	Ref.	Part No.	Serial Number	Description	Qty.
	1	1073812	(008467–)	Pedal Wldt, Brake [800 Gray]	1
	2	51109	(008467–)	Pad	1
	3	64635	(008467–)	Spacer	1
	4	57311	(008467–)	Spacer–.50 Od X .055W X 1.0	1
	5	70550	(008467–)	Rod Wldt, Push, Brake	1
▽	6	64950	(008467–)	Cylinder, Master Brake	1
▲		374240	(008467–)	Cap, Cyl Assy, Master Brake	1
	7	76653	(008467–)	Pin, Clevis .375D X 1.000 Lg	1
	8	51483	(008467–)	Fitting,Brass,Tee 06lf– 02Pm– 06lf	1
	9	51562	(008467–)	Sleeve, .344B .50D .81 Cr.Anc	2
	10	86034	(008467–)	Spacer, Brake	2
	11	46236	(008467–)	Clamp–Cable, 0.25Dia 0.56Wth	4
	12	76491	(008467–)	Bracket, Adjuster, Brake	1
	13	76490	(008467–)	Rod–Thread, 2End M08X1.25X10Lg	1
	14	79593	(008467–)	Tube Assy, Brake	1
	15	79594	(008467–)	Tube Assy, Brake	1
	16	375526	(008467–)	Insulation, S/Foam 1.0 Seal Brake Pedal	1
	17	70506	(008467–)	Bar, Equalizer	1
	18	64556	(008467–)	Cable, Brake, Park	1
	19	64558	(008467–)	Cable, Brake, Park	1
	20	65129	(008467–)	Clamp, Cable– Brake	2
	21	75575	(008467–)	Spring, Tens,0.5Dx.06Wire 2.5L	1
	22	31775	(008467–)	Molding, Trim 11–14Ga 4.0	1
	23	74022	(008467–)	Strip, Retainer, Brake Cable	1
	24	51545	(008467–)	Lever, Brake	1
	25	380717	(008467–)	Insulation, Sound Foam	1
	26	39279	(008467–)	Screw, Hex, M8 X 1.25 X 70, 8.8	2
	27	32491	(008467–)	Washer, Flat, 0.31 Std	4
	28	16735	(008467–)	Screw, Hex, M8 X 1.25 X 16, 8.8	4
	29	39284	(008467–)	Screw, Hex, M10 X 1.50 X 35, 8.8	2
	30	32492	(008467–)	Washer, Flat, 0.38, Std	8
	31	41430	(008467–)	Nut, Hex, Lock, M10 X 1.5, Nl	3
	32	39312	(008467–)	Nut, Hex, Std, M10 X 1.50	4
	33	08709	(008467–)	Nut, Hex, Lock, M8 X 1.25, Nl	2
	34	39285	(008467–)	Screw, Hex, M10 X 1.50 X 40, 8.8	1
	35	35706	(008467–)	Screw, Hex, .38–16 X 2.75, G5	1
	36	50902	(008467–)	Nut, Hex, Lock, .38–16, Nl	1
	37	36643	(008467–)	Nut, Hex, Lock, .38–16, Nl, Thin	1
	38	39311	(008467–)	Nut, Hex, Std, M8 X 1.25	4
	39	39349	(008467–)	Washer, Flat, 0.31, Sae	1
	40	06943	(008467–)	Screw, Hex, M6 X 1.00 X 20, 8.8	1
	41	32483	(008467–)	Washer, Flat, 0.25, Sae	1
	42	07790	(008467–)	Nut, Hex, Flng, M6 X 1.00	1

Fig. 29 – Directional Pedal Group

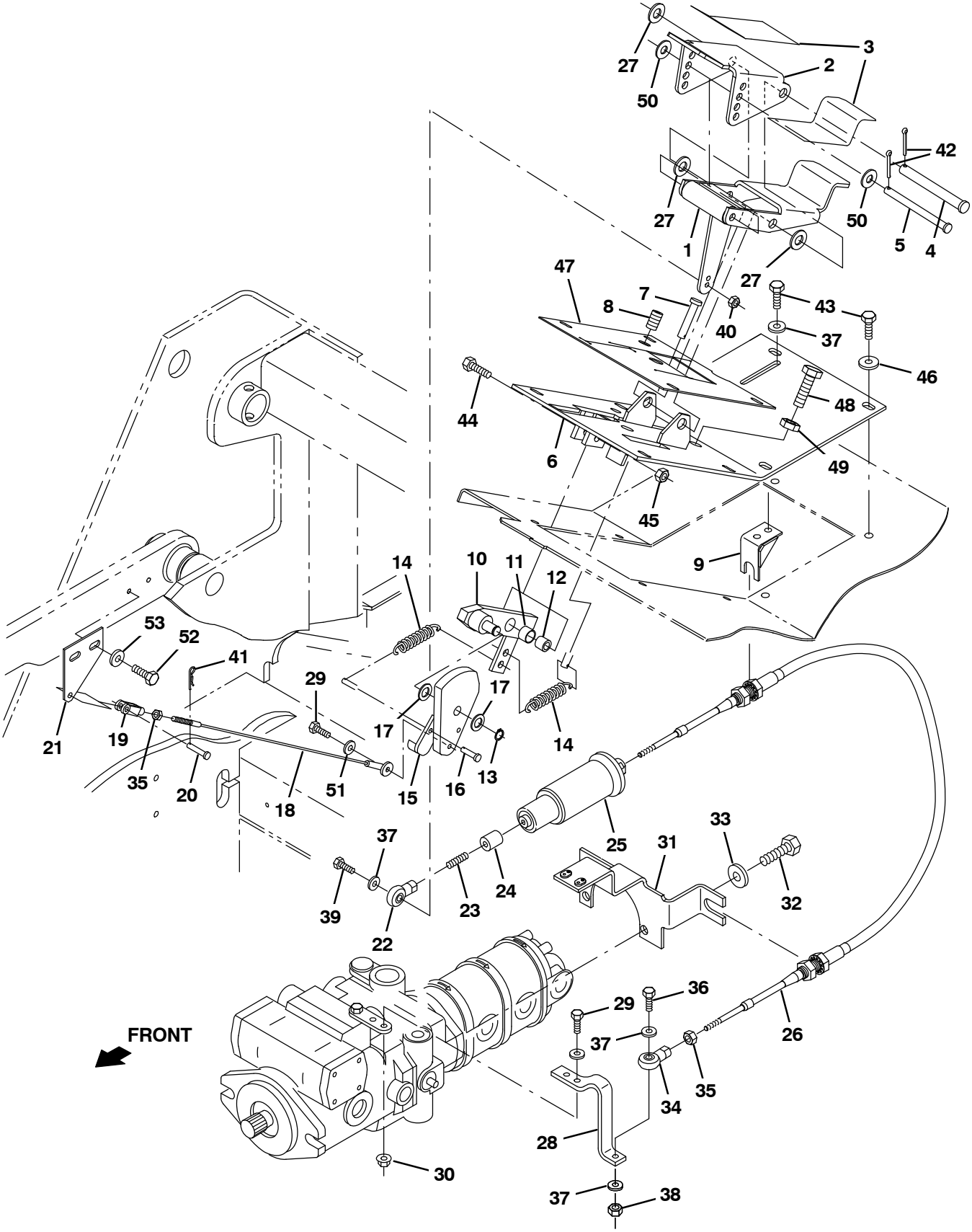

350684 – G, LP

Fig. 29 – Directional Pedal Group

Ref.	Part No.	Serial Number	Description	Qty.
1	9012874	(008467–)	Pedal, Propel, Lower, W/Tread [800 Gray]	1
2	9012859	(008467–)	Pedal, Propel, Upper, W/ Tread	1
3	82839	(008467–)	Tread, Non–Skid, 02.2w 11.5l	1
4	59668	(008467–)	Pin, Clevis, 0.50d X 4.50l	1
5	59672	(008467–)	Pin, Clevis, 0.37d X 4.50l	1
6	1073847	(008467–)	Panel Wldt, Access, Floor [800 Gray]	1
7	76647	(008467–)	Pin, Clevis, 0.37d X 1.31l	1
8	76523	(008467–)	Screw, Set, Soc, M10 X 1.50 X 20	1
9	380567	(008467–)	Bracket Wldt, Mtg, Propel Cable	1
10	70747	(008467–)	Bellcrank Wldt, Pivot, Dir Cntrl	1
11	07449	(008467–)	Bushing, Sleeve, 0.62b 0.72d 0.50l, Fgl	1
12	74051	(008467–)	Tube, 0.41id 0.62od 00.5l, Stl [H/T]	1
13	86953	(008467–)	Ring, Retaining, Ext, 0.50d, Ss	1
14	54222	(008467–)	Spring, Extn, 1.00od 0.09wir 02.8l	2
15	70783	(008467–)	Cam Wldt, Limiter, Spd	1
16	82168	(008467–)	Pin, Clevis, 0.25d X 1.00l	1
17	41722	(008467–)	Washer, Flat, 0.52b 0.90d .07, Stl, Pl	2
18	70749	(008467–)	Cable, Pull, .09d 18.3l .25eye /.25–28	1
19	14595–1	(008467–)	Clevis, Adj, 0.25pin, 0.25–28 Rh, Pl	1
20	14605	(008467–)	Pin, Clevis, 0.25d X 0.75l	1
21	70725	(008467–)	Plate, Limiter, Spd	1
22	68866	(008467–)	Rod–End, 0.25–28rh Fem 0.25b [Ptfe]	1
23	1212666	(008467–)	Screw, Set, .25–28 X 1.00, Ss	1
24	380568	(008467–)	Bar, Hex, Stl 0.63, 00.88 .25–28	1
25	63292	(008467–)	Spring Assy, Centering, Lbs . Travel	1
26	63276	(008467–)	Cable, Push / Pull, 096.0l .25–28/.25–28	1
27	32486	(008467–)	Washer Flat,0.50,Sae	3
28	380514	(008467–)	Arm, Cntrl, Pintle	1
29	06943	(008467–)	Screw, Hex, M6 X 1.00 X 20, 8.8	3
30	07790	(008467–)	Nut, Hex, Flng, M6 X 1.00	2
31	1020982	(008467–)	Bracket, Mtg, Propel Cable	1
32	21198	(008467–)	Screw, Hex, .38–16 X 1.25, G5	2
33	32485	(008467–)	Washer, Flat, 0.38, Sae	2
34	68866	(008467–)	Rod–End, 0.25–28rh Fem 0.25b [Ptfe]	1
35	32899	(008467–)	Nut, Hex, Jam, .25–28	2
36	25046	(008467–)	Screw, Hex, .25–20 X 1.00, G5	1
37	32490	(008467–)	Washer, Flat, 0.25, Std	7
38	41169	(008467–)	Nut, Hex, Lock, .25–20, Nl, Ss	1
39	07805	(008467–)	Screw, Hex, M6 X 1.00 X 35, Ss	1
40	08712	(008467–)	Nut, Hex, Lock, M6 X 1.00, Nl, Ss	1
41	08085	(008467–)	Pin, Cotter, Hair, 0.31d .058 Wir	1
42	08346	(008467–)	Pin, Cotter, .125 X 0.75	2
43	12273	(008467–)	Screw, Hex, M8 X 1.25 X 20, Nl, Ss	9
44	39285	(008467–)	Screw, Hex, M10 X 1.50 X 40, 8.8	1
45	41430	(008467–)	Nut, Hex, Lock, M10 X 1.5, Nl	1
46	1017218	(008467–)	Washer, Flat, 0.32b 1.00d .12, Ss	7
47	79116	(008467–)	Seal, Dust	1
48	06969	(008467–)	Screw, Hex, M12 X 1.75 X 40, 8.8	2
49	39313	(008467–)	Nut, Hex, Std, M12 X 1.75	2
50	32492	(008467–)	Washer, Flat, 0.38, Std	2
51	19066	(008467–)	Washer, Flat, 0.25b 0.56d .05, Pl, 10	1
52	16931	(008467–)	Screw, Hex, M8 X 1.25 X 20, 8.8	2
53	32491	(008467–)	Washer, Flat, 0.31, Std	2

Fig. 30 – Hopper Lift Arms Group

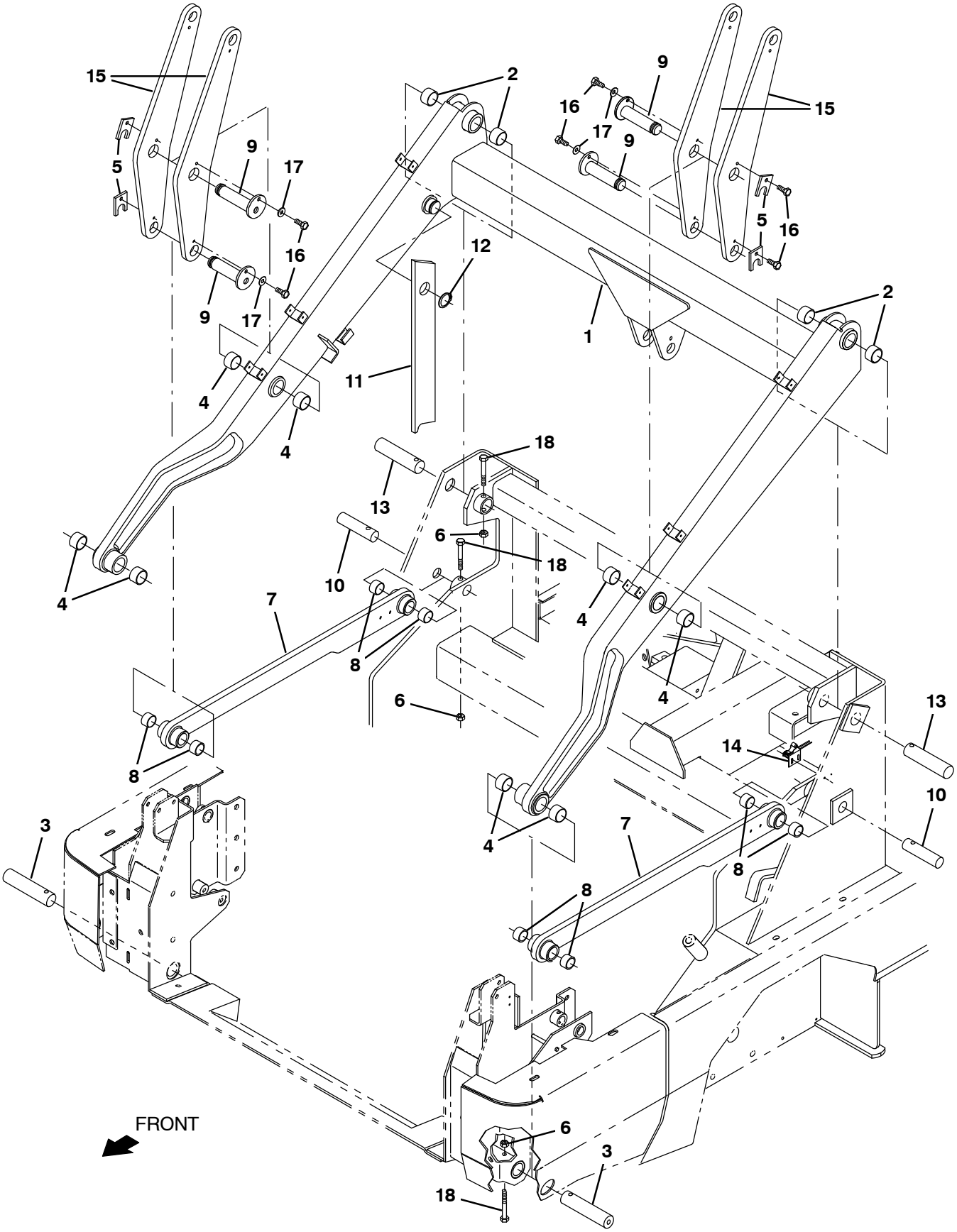

07574

Fig. 30 – Hopper Lift Arms Group

Ref.	Part No.	Serial Number	Description	Qty.
1	75861	(008467–)	Arm, Lift, Hppr, W/ Label [800l]	1
2	58293	(008467–)	Bushing, Sleeve, 1.51b 1.66d 1.00l, Tef	4
3	77463	(008467–)	Pin, 1.50d 07.4l, 1/.44h, Stl	2
4	58293	(008467–)	Bushing, Sleeve, 1.51b 1.66d 1.00l, Tef	8
5	83554	(008467–)	Plate, Retainer, Pin	4
6	41430	(008467–)	Nut, Hex, Lock, M10 X 1.5, Nl	6
7	1053518	(008467–)	Arm, Lift, Hppr, Lower	2
8	57936	(008467–)	Bushing, Sleeve, 1.25b 1.41d 1.00l, Tef	2
9	83553	(008467–)	Pin Wldt	4
10	76470	(008467–)	Pin, 1.25d 05.4l, 1/.44h, Stl	2
11	380681	(008467–)	Arm, Safety, Hppr, W/ Label [800]	1
12	63926	(008467–)	Ring, Retaining, Ext, 1.50d, Hd	1
13	76471	(008467–)	Pin, 1.50d 06.9l, 1/.44h, Stl	2
14	59965	(008467–)	Switch, Snap, 15a No, Rlr	1
15	83549	(008467–)	Link, Head, Vacuum, Rh, .50 1.50w 23.0l	4
16	10959	(008467–)	Screw, Hex, M10 X 1.50 X 20, Nl, Ss	8
17	32492	(008467–)	Washer, Flat, 0.38, Std	4
18	06964	(008467–)	Screw, Hex, M10 X 1.50 X 70, 8.8	4

Fig. 31 – Hopper Lift Cylinders Group

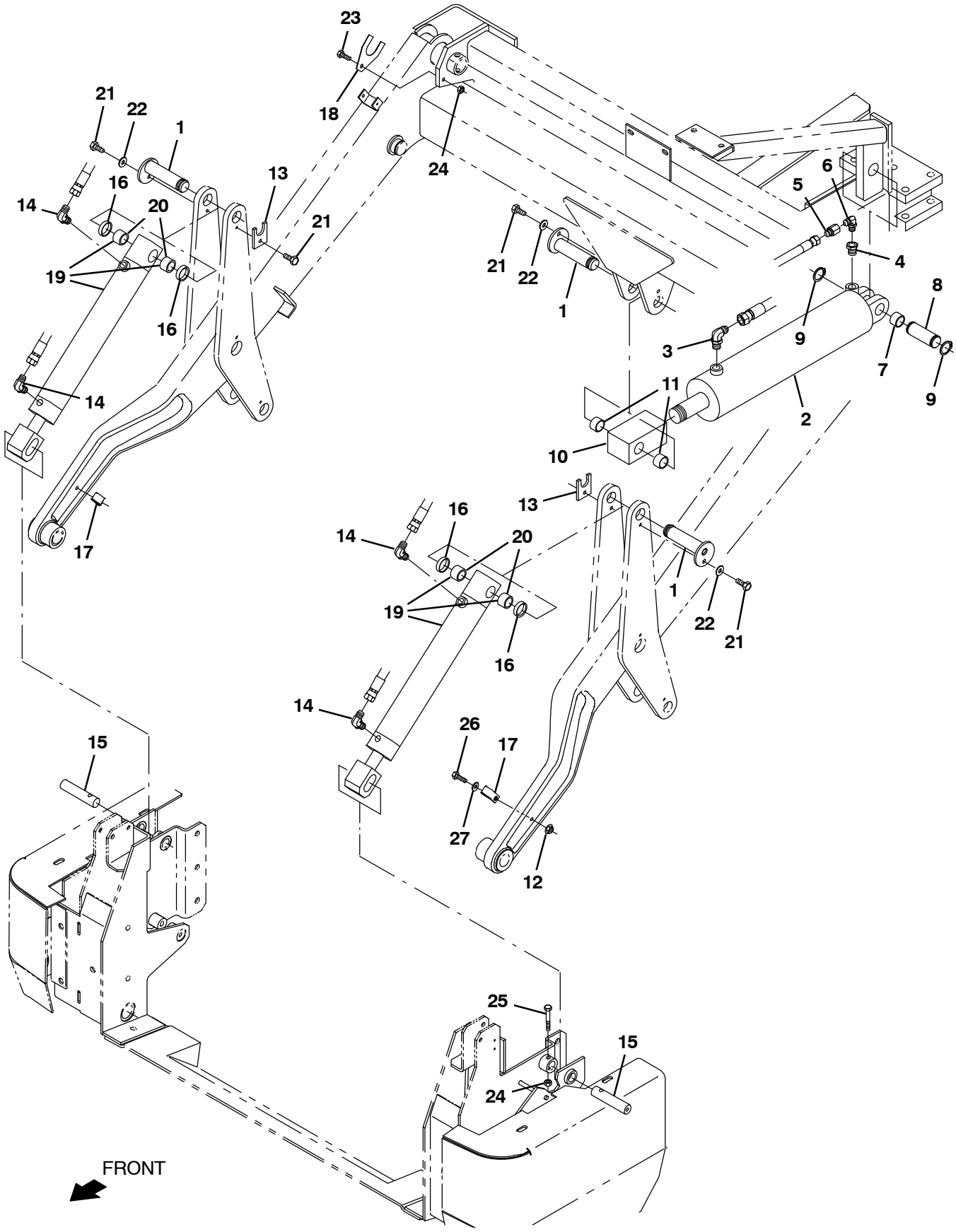

07585 – ALL

Fig. 31 – Hopper Lift Cylinders Group

	Ref.	Part No.	Serial Number		Description	Qty.
	1	83553	(008467–	)	Pin Wldt	3
	2	1026719	(008467–	)	Cylinder, Hyd, 4.0b 29.1l 14.50strk 2500	1
	3	47512	(008467–	)	Fitting, Hyd, E90, Jm06/Om08	1
	4	55686	(008467–	)	Fitting, Hyd, Str, Jm04/Om08	1
	5	16456	(008467–	)	Fitting, Hyd, Rst, Jf04/Jm04, .063	1
	6	39210	(008467–	)	Fitting, Hyd, E90, Jf04/Jm04	1
	7	59866	(008467–	)	Bushing, Sleeve, 1.25b 1.40d 1.00l, Fgl	1
	8	63583	(008467–	)	Pin, Grvd, 1.25d 03.50l	1
	9	58359	(008467–	)	Retainer, Ring	2
	10	64156	(008467–	)	Rod–End, 1.31–16 Fem 1.4h	1
	11	57936	(008467–	)	Bushing, Sleeve, 1.25b 1.41d 1.00l, Tef	2
	12	07791	(008467–	)	Nut, Hex, Flng, M8 X 1.25	1
	13	83554	(008467–	)	Plate, Retainer, Pin	2
	14	47638	(008467–	)	Fitting, Hyd, E90, Jm04/Om06	4
	15	63584	(008467–	)	Pin, 1.00d 04.5l, 1/.38h, 1/M8x1.25, Stl	2
	16	83555	(008467–	)	Tube, 1.28id 1.50od 00.4l, Stl	4
	17	69234	(008467–	)	Clamp, Cable, Stl, 1.00d X 0.75w, 1hole	2
	18	75891	(008467–	)	Plate, Spacer	2
▽	19	1042110	(008467–	)	Cylinder, Hyd, 2.0b 23.8l 14.90strk 2500	2
▲	20	57936	(008467–	)	Bushing, Sleeve, 1.25b 1.41d 1.00l, Tef	2
	21	10959	(008467–	)	Screw, Hex, M10 X 1.50 X 20, Nl, Ss	8
	22	32492	(008467–	)	Washer, Flat, 0.38, Std	3
	23	39277	(008467–	)	Screw, Hex, M8 X 1.25 X 25, 8.8	2
	24	08709	(008467–	)	Nut, Hex, Lock, M8 X 1.25, Nl	4
	25	06957	(008467–	)	Screw, Hex, M8 X 1.25 X 60, 8.8	2
	26	76570	(008467–	)	Screw, Hex, M8 X 1.25 X 30, 8.8	2
	27	32491	(008467–	)	Washer, Flat, 0.31, Std	2

Fig. 32 – Hopper Group

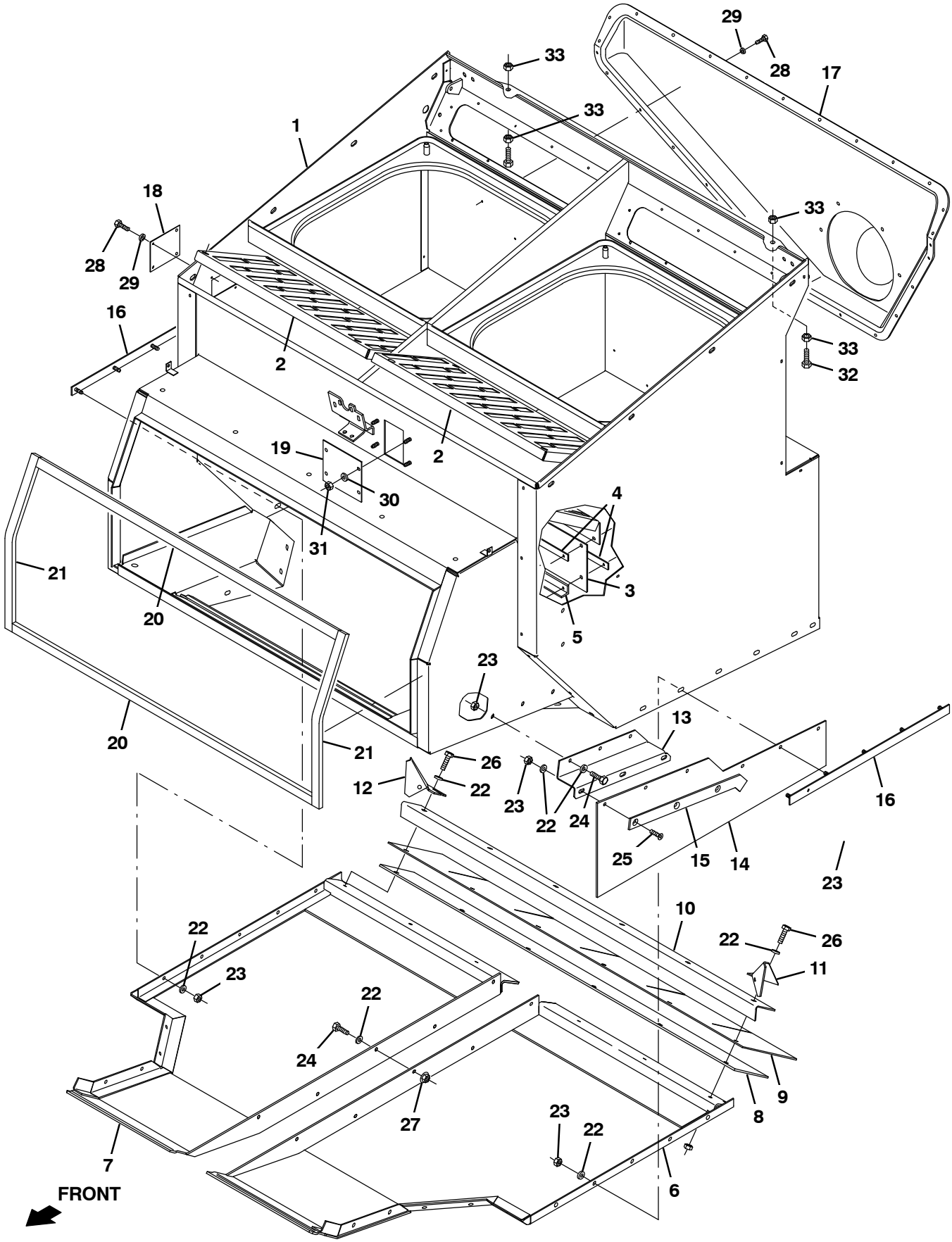

07573 – G, LP

Fig. 32 – Hopper Group

Ref.	Part No.	Serial Number	Description	Qty.
1	1074688	(008467–)	Hopper, Afmkt [800]	1
2	63665	(008467–)	Panel, Perma–Filter, Upper	2
3	63667	(008467–)	Seal, Dust	1
4	63668	(008467–)	Retainer, Seal, Dust, .12 X 0.8w X 48.4l	2
5	63669	(008467–)	Angle, Mtg, .19 1.00 X 1.00 48.4l 6/.30h	1
6	1073940	(008467–)	Panel, Hppr, Bottom, Lh [800 B/Green]	1
7	1073939	(008467–)	Panel, Hppr, Bottom, Rh [800 B/Green]	1
8	73678	(008467–)	Skirt, Neo, .18, 05.62w 48.37l, 06/ Sl	1
9	73679	(008467–)	Skirt, Neo, .12, 08.25w 48.37l, 06/ Sl	1
10	63647	(008467–)	Retainer, Skirt, .12, 3.2w X 48.2l, Blk	1
11	74046	(008467–)	Panel, Deflector, Dirt, Rh	1
12	74045	(008467–)	Panel, Deflector, Dirt, Lh	1
13	73772	(008467–)	Bracket, Mtg, Skirt	1
14	73771	(008467–)	Skirt, Neo, .12, Angle, 31.23l, 06/ Hole	1
15	73749	(008467–)	Retainer, Blade, Deflector, Front	1
16	79139	(008467–)	Retainer, Skirt, .12, 1.0w X 21.7l,White	2
17	70388	(008467–)	Cover, Duct, Inlet, Vacfan	1
18	74069	(008467–)	Cover, Access, Side Hppr	1
19	73887	(008467–)	Cover, Access, Front Hppr	1
20	79597	(008467–)	Seal, Ure, 0.88, 1.00w 43.3l Adh	2
21	79600	(008467–)	Seal, Ure, 0.88, 1.00w 18.1l Adh	2
22	01685	(008467–)	Washer, Flat, 0.38b 0.88d .08, Ss	27
23	08713	(008467–)	Nut, Hex, Lock, M8 X 1.25, Nl, Ss	22
24	09740	(008467–)	Screw, Hex, M8 X 1.25 X 20, Ss	18
25	79506	(008467–)	Screw, Flt, Soc, M8 X 1.25 X 30, Ss	3
26	09011	(008467–)	Screw, Hex, M8 X 1.25 X 30, Ss	6
27	07791	(008467–)	Nut, Hex, Flng, M8 X 1.25	15
28	74455	(008467–)	Screw, Hex, M6 X 1.00 X 12, Fmg	33
29	19066	(008467–)	Washer, Flat, 0.25b 0.56d .05, Pl, 10	33
30	39349	(008467–)	Washer, Flat, 0.31, Sae	4
31	08709	(008467–)	Nut, Hex, Lock, M8 X 1.25, Nl	4
32	06972	(008467–)	Screw, Hex, M12 X 1.75 X 60, 8.8	2
33	39313	(008467–)	Nut, Hex, Std, M12 X 1.75	4

Fig. 33 – Hopper Door Group

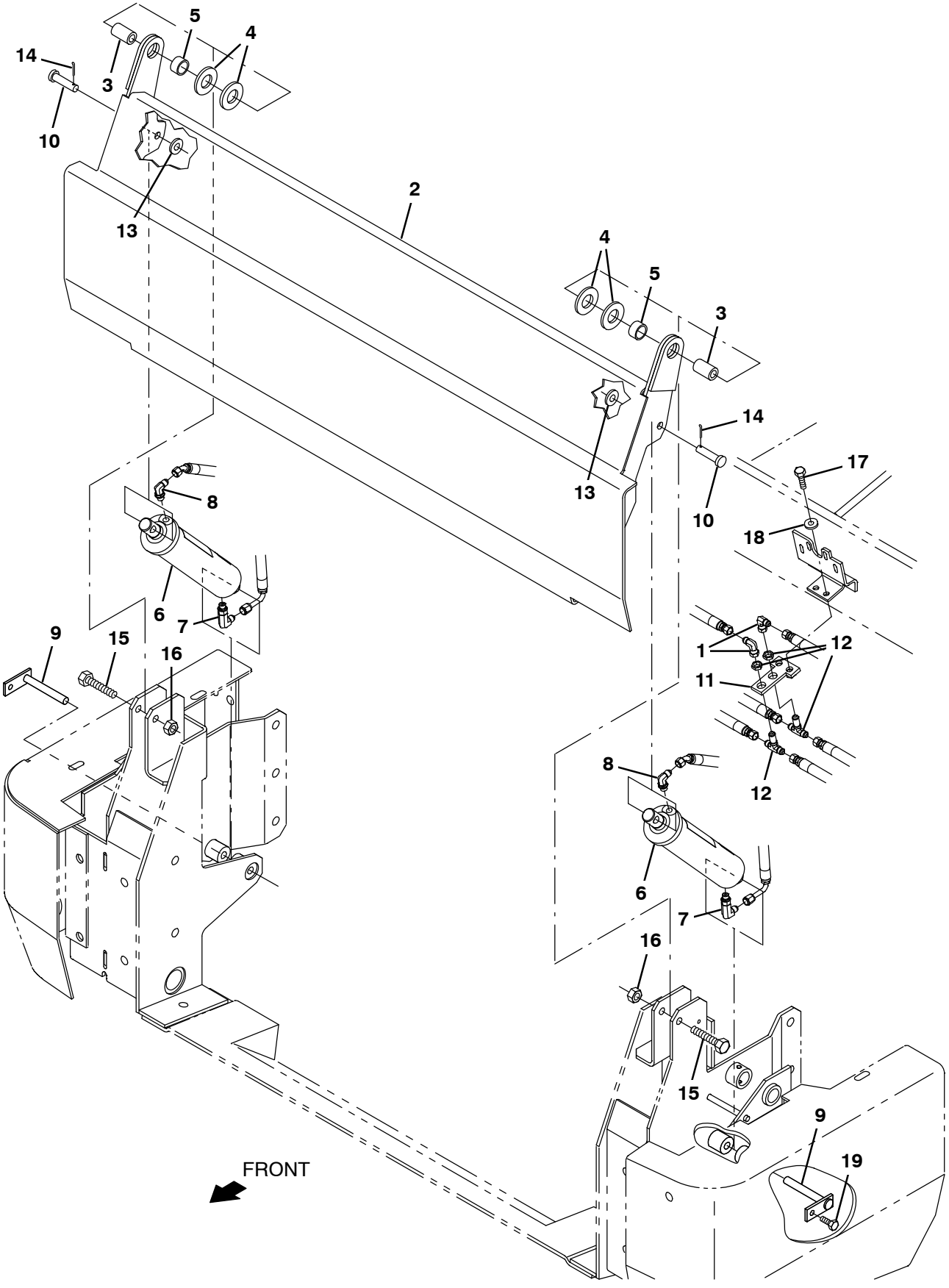

07575 – G, LP

Fig. 33 – Hopper Door Group

Ref.	Part No.	Serial Number	Description	Qty.
1	39210	(008467–)	Fitting, Hyd, E90, Jf04/Jm04	2
2	1073841	(008467–)	Door Wldt, Dump, Hppr, Front [800 Gray]	1
3	79138	(008467–)	Tube, 0.53id 1.00od 01.4l, Stl [Q]	2
4	79596	(008467–)	Washer	4
5	35688	(008467–)	Bushing, Sleeve, 1.00b 1.25d 0.49l, Fgl	2
6	1041090	(008467–)	Cylinder, Hyd, 2.0b 12.0l 08.00strk 2500	2
7	82825	(008467–)	Fitting, Hyd, E90, Jm04/Om04, Long	2
8	77097	(008467–)	Fitting, Hyd, E90, Jm04/Om04	2
9	64893	(008467–)	Pin Wldt	2
10	21722	(008467–)	Pin, Clevis, 0.50d X 2.25l [1141 Stl]	2
11	75012	(008467–)	Bracket, Mtg, Ftg	1
12	34392	(008467–)	Fitting, Hyd, Tee, Jm04/Jm04/Jm04,Bh Br	2
13	32486	(008467–)	Washer Flat,0.50,Sae	4
14	08182	(008467–)	Pin, Cotter, .125 X 1.00	2
15	06973	(008467–)	Screw, Hex, M12 X 1.75 X 70, 8.8	2
16	08713	(008467–)	Nut, Hex, Lock, M8 X 1.25, Nl, Ss	2
17	39277	(008467–)	Screw, Hex, M8 X 1.25 X 25, 8.8	2
18	32491	(008467–)	Washer, Flat, 0.31, Std	2
19	16931	(008467–)	Screw, Hex, M8 X 1.25 X 20, 8.8	2

Fig. 34 – Hopper Cover Group

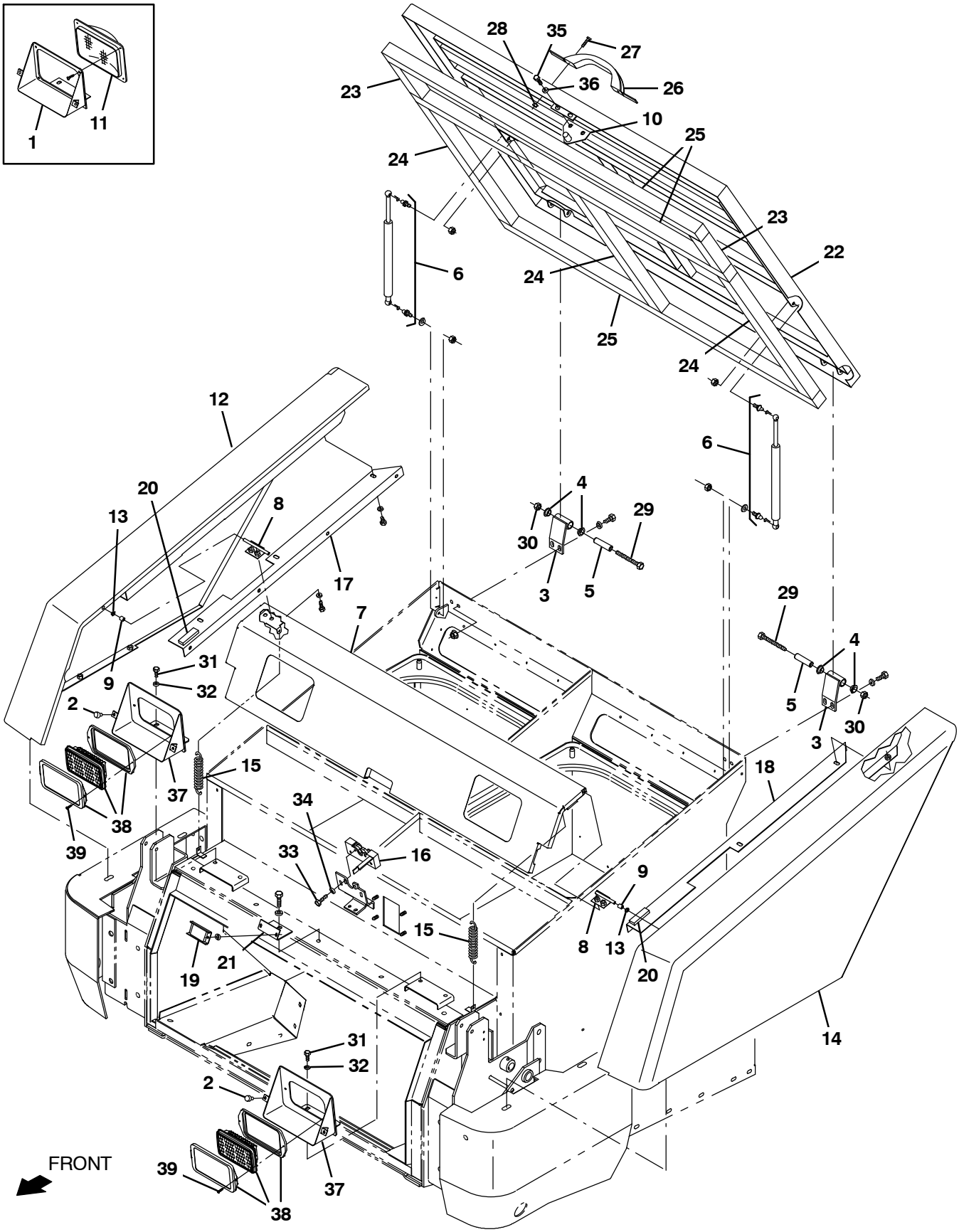

07577 – G, LP

Fig. 34 – Hopper Cover Group

	Ref.	Part No.	Serial Number	Description	Qty.
	1	1073832	(008467–008733)	Bracket Wldt, Mtg, Headlight [800 B/Gr]	2
	2	51787	(008467–)	Bumper, Rbr, 0.6d 0.34th 0.3d Tip	4
	3	1073872	(008467–)	Hinge Wldt [800 Blue/Green]	2
	4	04843	(008467–)	Bushing, Flng, 0.63b 0.72d 0.25l	4
	5	70761	(008467–)	Tube, 0.44id 0.62od 02.4l, Stl	2
	6	69906	(008467–)	Gasspring Assy, Eng Cover	2
	7	1073895	(008467–)	Panel Wldt, Headlight [800 B/Green]	1
	8	70730	(008467–)	Hinge Wldt	2
	9	74015	(008467–)	Tube, 0.34id 0.44od 00.5l, Stl	2
	10	70742	(008467–)	Pin Wldt, Latch	1
	11	9018575	(008467–008733)	Headlight Kit, Led, Replmt [800]	1
	12	1073820	(008467–)	Cover Wldt, Hppr, Rh [800 B/Green]	1
	13	11747	(008467–)	Bushing, Snap–In, 0.31b 0.41d 0.14th Nyl	2
	14	1073821	(008467–)	Cover Wldt, Hppr, Lh [800 B/Green]	1
	15	01274	(008467–)	Spring, Extn, 0.96od 0.09wir 04.4l	2
	16	79019	(008467–)	Latch	1
	17	75047	(008467–)	Bracket, Mtg, Side Panl Rh [800l]	1
	18	75046	(008467–)	Bracket, Mtg, Side Panl Lh [800l]	1
	19	63378	(008467–)	Magnet, Drive Brush	1
	20	79591	(008467–)	Bumper, Cover, Hppr	2
	21	77400	(008467–)	Angle, Mtg	1
▽	22	1073959	(008467–)	Cover Assy, Hppr [800 B/Green]	1
▲	23	375564	(008467–)	Seal, Rbr, Clsd, 1.50, 2.00w 07.0l	2
▲	24	375565	(008467–)	Seal, Rbr, Clsd, 1.50, 2.00w 26.4l	3
▲	25	375566	(008467–)	Seal, Rbr, Clsd, 1.50, 2.00w 50.1l	3
▲	26	381962	(008467–)	Handle, Container	1
▲	27	382726	(008467–)	Screw, Pan, Phl, M6 X 1.00 X 25, 4.8	2
▲	28	08708	(008467–)	Nut, Hex, Lock, M6 X 1.00, Nl	2
	29	03193	(008467–)	Screw, Hex, M10 X 1.50 X 90, 8.8	2
	30	41430	(008467–)	Nut, Hex, Lock, M10 X 1.5, Nl	2
	31	16931	(008467–)	Screw, Hex, M8 X 1.25 X 20, 8.8	4
	32	32491	(008467–)	Washer, Flat, 0.31, Std	4
	33	12274	(008467–)	Screw, Hex, M6 X 1.00 X 20, 8.8, Nl	4
	34	19066	(008467–)	Washer, Flat, 0.25b 0.56d .05, Pl, 10	4
	35	16735	(008467–)	Screw, Hex, M8 X 1.25 X 16, 8.8	2
	36	41186	(008467–)	Washer, Flat, Belleville, .31	2
	37	1243631	(008734–)	Bracket Wldt, Mtg, Headlight [800 B/Gr]	2
▽	38	1242462	(008734–)	Headlight, Led, Rt	2
▲		45223	(008734–)	Terminal, Qm, .25 16–14ga, F–Ins	2
	39	06927	(008734–)	Screw, Hex, M12 X 1.75 X 60, 8.8	4

Fig. 35 – Hopper Bumper Group

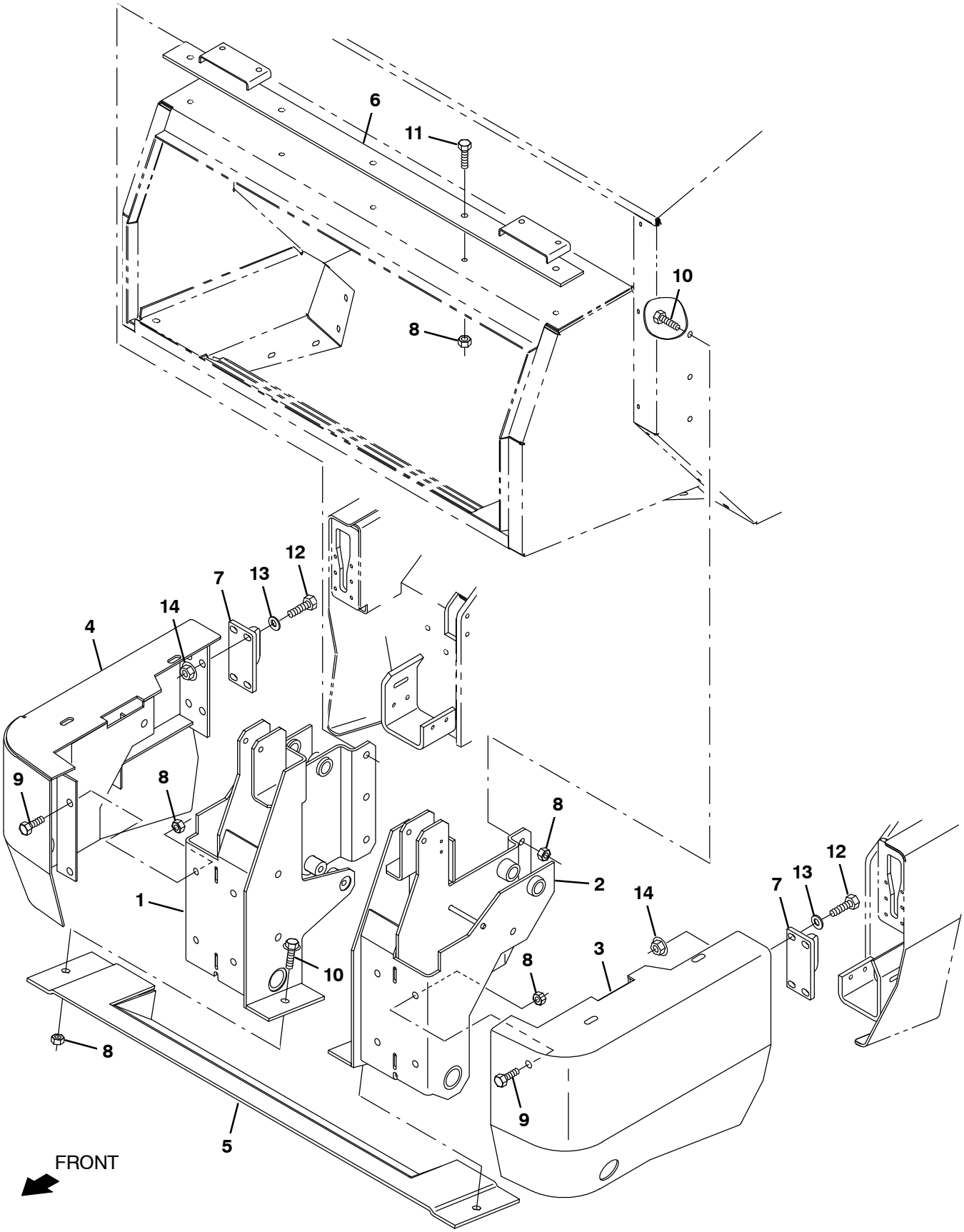

09802 – G, LP

Fig. 35 – Hopper Bumper Group

Ref.	Part No.	Serial Number	Description	Qty.
1	83547	(008467–)	Bumper Wldt, Sppt, Hppr, Rh	1
2	83548	(008467–)	Bumper Wldt, Sppt, Hppr, Lh	1
3	1073842	(008467–)	Bumper Wldt, Lh [800 Gray]	1
4	1073843	(008467–)	Bumper Wldt, Rh [800 Gray]	1
5	77523	(008467–)	Guard Wldt, Hppr	1
6	77516	(008467–)	Bracket Wldt, Mtg, Headlight	1
7	63671	(008467–)	Latch, Bmpr	2
8	08714	(008467–)	Nut, Hex, Lock, M10 X 1.5, Nl, Ss	5
9	09028	(008467–)	Screw, Hex, M10 X 1.50 X 25, Ss	5
10	05720	(008467–)	Screw, Hex, M10 X 1.50 X 40, Fl, Ss	2
11	12317	(008467–)	Screw, Hex, M10 X 1.50 X 30, Ss	5
12	06968	(008467–)	Screw, Hex, M12 X 1.75 X 35, 8.8	8
13	32486	(008467–)	Washer, Flat, 0.53b 1.06d .10, Stl, Pl	8
14	07793	(008467–)	Nut, Hex, Flng, M12 X 1.75	8

Fig. 36 – Hopper Filter Shaker Group

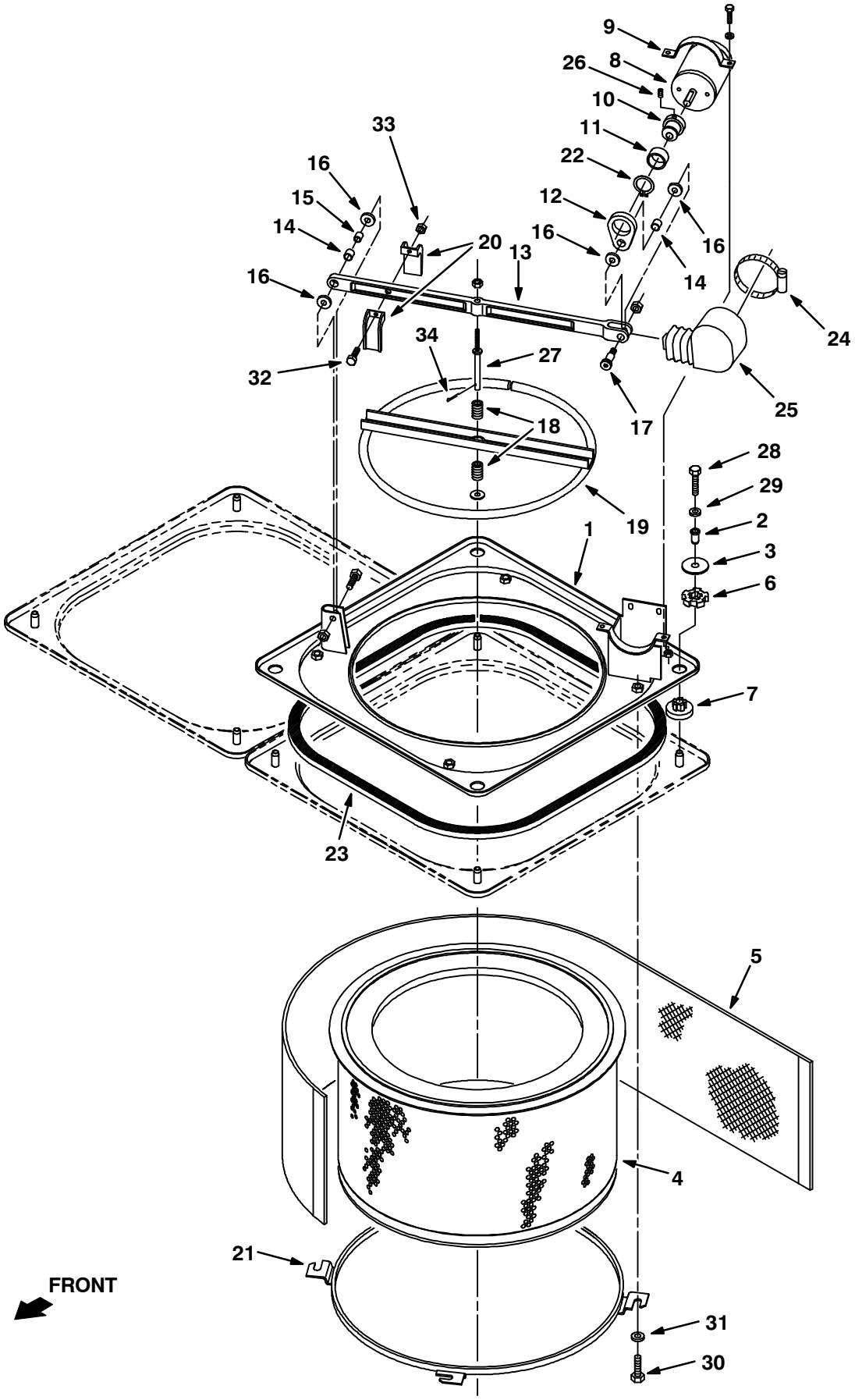

07576 – ALL

Fig. 36 – Hopper Filter Shaker Group

	Ref.	Part No.	Serial Number		Description	Qty.
	1	64580	(008467–	)	Panel Wldt, Shakr	2
	2	64874	(008467–	)	Ferrule	8
	3	64873	(008467–	)	Disc, Stl, 0.06, 02.00d, 0.6h	8
	4	48069	(008467–	)	Element, Fltr, Air, 20.5d 10.8l	2
▽	4	63297	(008467–	)	Element, Fltr, Air	2
▲	5	63311	(008467–	)	Screen, Fltr, 10.0 X	1
	6	64618	(008467–	)	Isolator, Vib, Ring, 1.9d 0.5l 1.3b	8
	7	64621	(008467–	)	Isolator, Vib, Bshg, 1.9d 0.9l .6b 1.16h	8
	8	31999	(008467–	)	Motor, Ele, 14vdc 1600rpm 0.04hp	2
	9	64559	(008467–	)	Clamp, Cable, Stl, 3.32d X 0.75w, 2hole	2
	10	64567	(008467–	)	Shaft, Eccentric	2
	11	32006	(008467–	)	Bearing, Needle, 1.13b 1.38d 0.75w	2
	12	64394	(008467–	)	Link, Eccentric	2
▽	13	77471	(008467–	)	Bar Kit, Shakr, F/64374, Replmt	2
▲	14	63233	(008467–	)	Bushing, Sleeve, 0.50b 0.59d 0.50l, Bnz	2
▲	15	63234	(008467–	)	Tube, 0.38id 0.5ood 00.6l, Ss	1
▲	16	59633	(008467–	)	Washer, Thrust, 0.53b 1.00d 0.03w[Fbrgl]	4
▲	17	58357	(008467–	)	Bolt, Shld, .50d X 1.00, .38–16	2
	18	64392	(008467–	)	Spring, Dsl, 0.75od 0.38id 1.50l	4
	19	64501	(008467–	)	Ring Wldt, Shakr	2
	20	64410	(008467–	)	Guide, Fltr, Shakr, [800]	4
	21	64500	(008467–	)	Ring Wldt, Mtg, Fltr	2
	22	70651	(008467–	)	Ring, Retaining, Ext, 1.12d	2
	23	21303	(008467–	)	Seal Kit, Bulb, Shakr Panl [800l]	2
	24	43555	(008467–	)	Clamp, Hose, Wormdrive, 2.62–3.50d	2
	25	73734	(008467–	)	Boot, Bar, Shakr, Fltr [800l]	2
	26	70650	(008467–	)	Screw, Set, Soc, M8 X 1.25 X 12, Pl[45h]	2
	27	32009	(008467–	)	Bar, Shakr Stem	2
	28	39284	(008467–	)	Screw, Hex, M10 X 1.50 X 35, 8.8	8
	29	32492	(008467–	)	Washer, Flat, 0.38, Std	8
	30	09028	(008467–	)	Screw, Hex, M10 X 1.50 X 25, Ss	8
	31	01686	(008467–	)	Washer, Flat, 0.44b 1.00d .08, Ss	8
	32	09164	(008467–	)	Screw, Pan, Phl, M6 X 1.00 X 20, 4.8	2
	33	08708	(008467–	)	Nut, Hex, Lock, M6 X 1.00, Nl	2
	34	1074659	(008467–	)	Pin, Cotter, .109 X 1.00	1

Fig. 37 – Hopper Pressure Switch Group

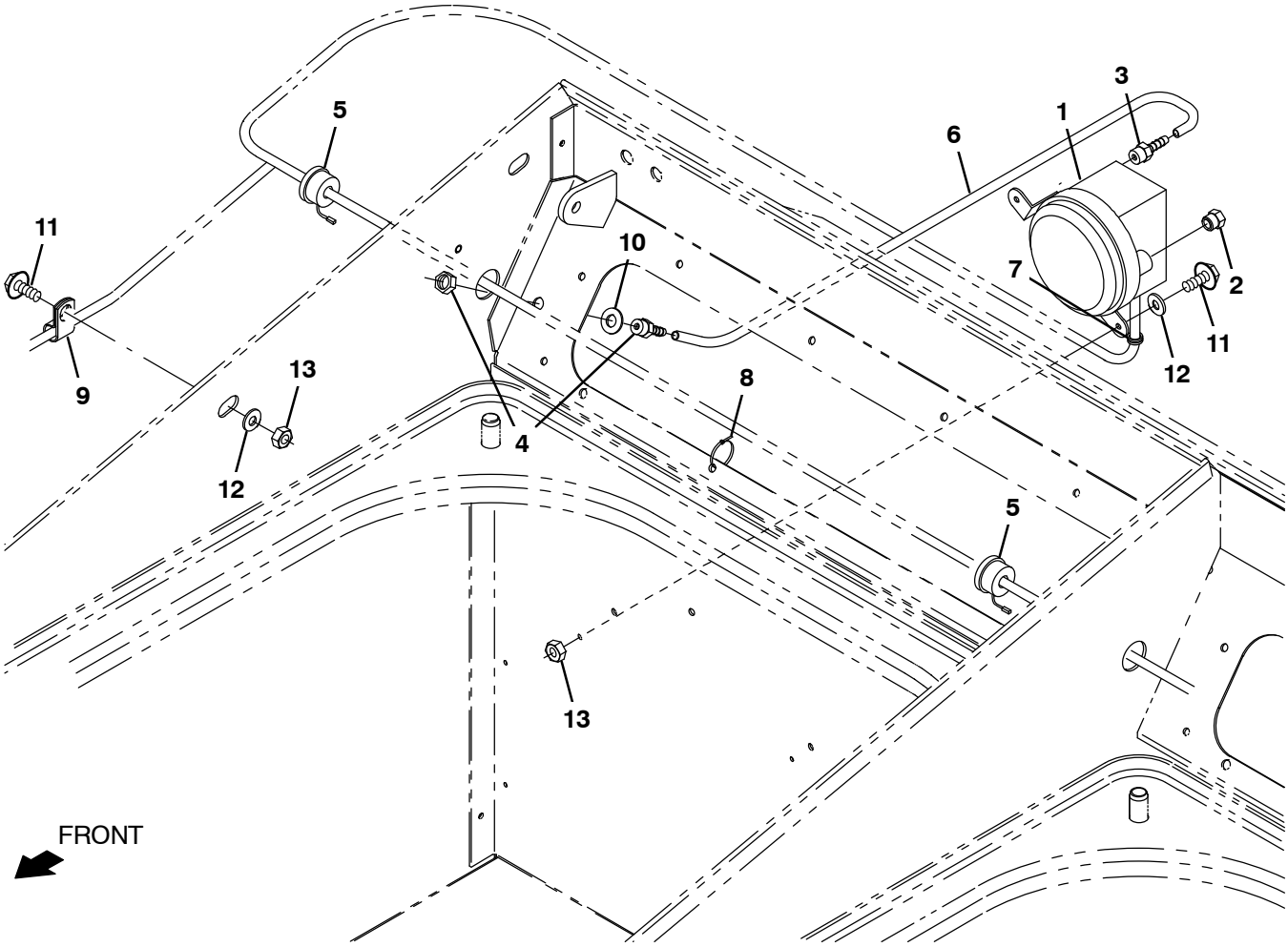

07626 – ALL

Fig. 37 – Hopper Pressure Switch Group

Ref.	Part No.	Serial Number	Description	Qty.
1	75465	(008467–)	Switch, Press, 0020psi Spdt	1
2	82739	(008467–)	Fitting, Brs, Breather [02mp]	1
3	40607	(008467–)	Fitting, Brs, Str, Bm03/Pm02	1
4	39923	(008467–)	Fitting, Brs, Str, Bm03/Bm03, Bh	1
5	34864	(008467–)	Strainrelief	2
6	73727	(008467–)	Hose, Vacuum, 0.16id X 009.5l	1
7	10632–4	(008467–)	Grommet, Rbr, 0.62id, F/0.9h, .06 Matl	1
8	49266	(008467–)	Tie, Cable, Nyl, 07.3l .19w 1.8 Max D	8
9	40678	(008467–)	Clamp, Cable, Stl, 0.44d X 0.62w, 1hole	2
10	43454	(008467–)	Washer, Flat, 0.34b 0.69d .06, Nyl	1
11	12459	(008467–)	Screw, Hex, M6 X 1.00 X 20, Fmg	4
12	32483	(008467–)	Washer, Flat, 0.25, Sae	4
13	08708	(008467–)	Nut, Hex, Lock, M6 X 1.00, Nl	2

Fig. 38 – Hydraulic Pumps Group

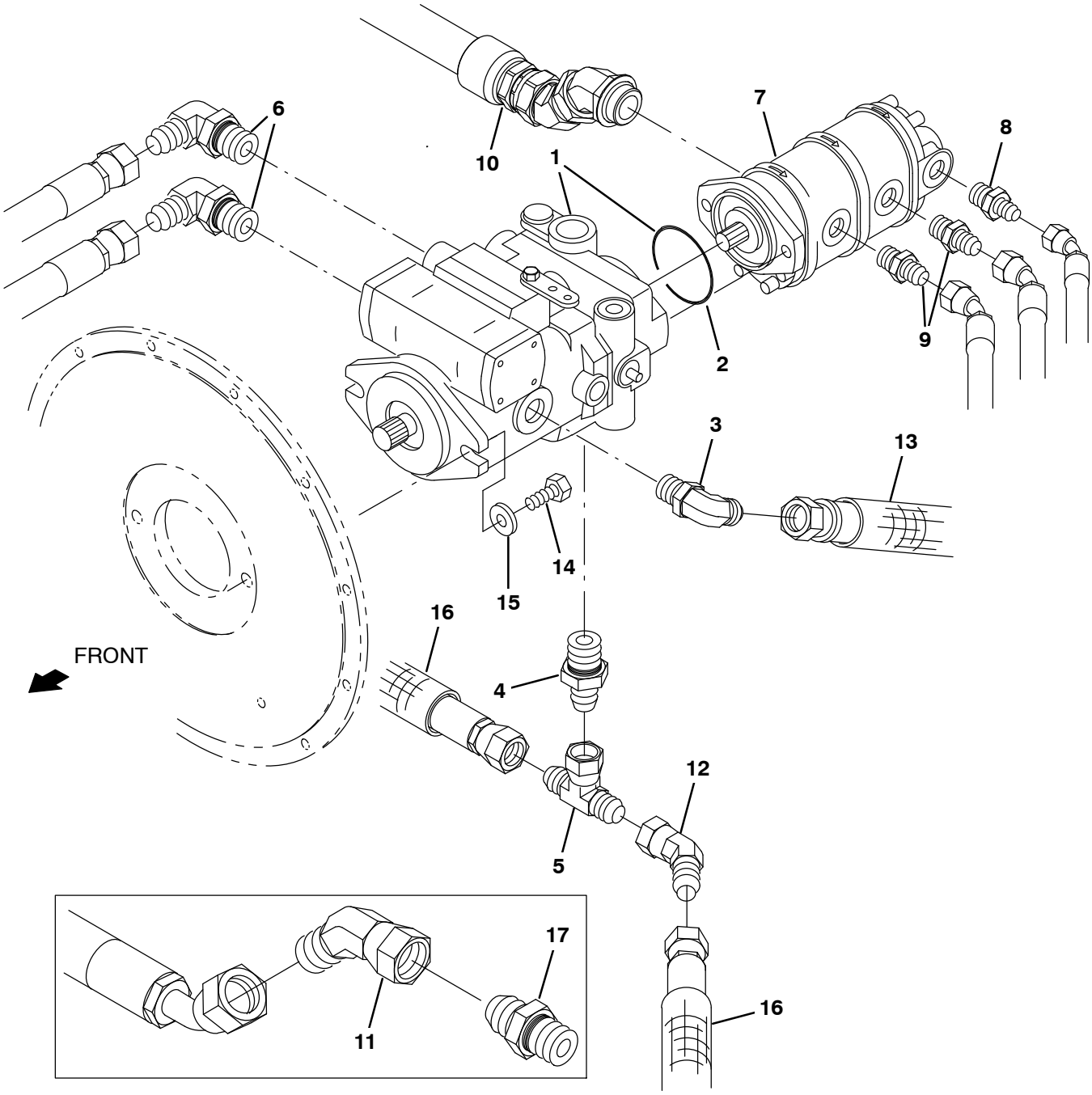

07597 – G, LP

Fig. 38 – Hydraulic Pumps Group

	Ref.	Part No.	Serial Number	Description	Qty.
▽	1	373404	(008467–)	Pump–Hyd Piston V (See Breakdowns)	1
▲	2	65145–1	(008467–)	O–Ring Gland	1
	3	46481	(008467–)	Fitting, Hyd, E90, Jm12/Om12	1
	4	67310	(008467–)	Fitting, Hyd, Str, Jm12/Om16	1
	5	62389	(008467–)	Fitting, Hyd, Tee, Jf12/Jm12/Jm12, Br	1
	6	767407	(008467–)	Fitting, Hyd, E90, Fm12/Om16	2
	7	373254	(008467–)	Pump–Hyd Gear Ex (See Breakdowns)	1
	8	47508	(008467–)	Fitting, Hyd, Str, Jm06/Om10	1
	9	56692	(008467–)	Fitting, Hyd, Str, Jm08/Om10	2
	10	1264182	(008467–)	Kit, Hose, Hyd W E45, Jf20/Jm20	1
	11	58858	(008467–)	Fitting, Hyd, Str, Jm20/Om20 (Replaced by 1264182)	1
	12	07934	(008467–)	Fitting, Hyd, E45, Jf12/Jm12	1
	13	82830	(008467–)	Sleeve, Nyl, 1.63id 16.0l	1
	14	39810	(008467–)	Screw, Hex, .50–13 X 1.25, G5	2
	15	32486	(008467–)	Washer, Flat, 0.53b 1.06d .10, Stl, Pl	2
	16	50121	(008467–)	Sleeve, Nyl, 1.63id 08.0l	2
	17	19544	(008467–)	Fitting, Hyd, Str, Jm20/Om20 (Replaced by 1264182)	1

Fig. 39 – Hydraulic Schematic

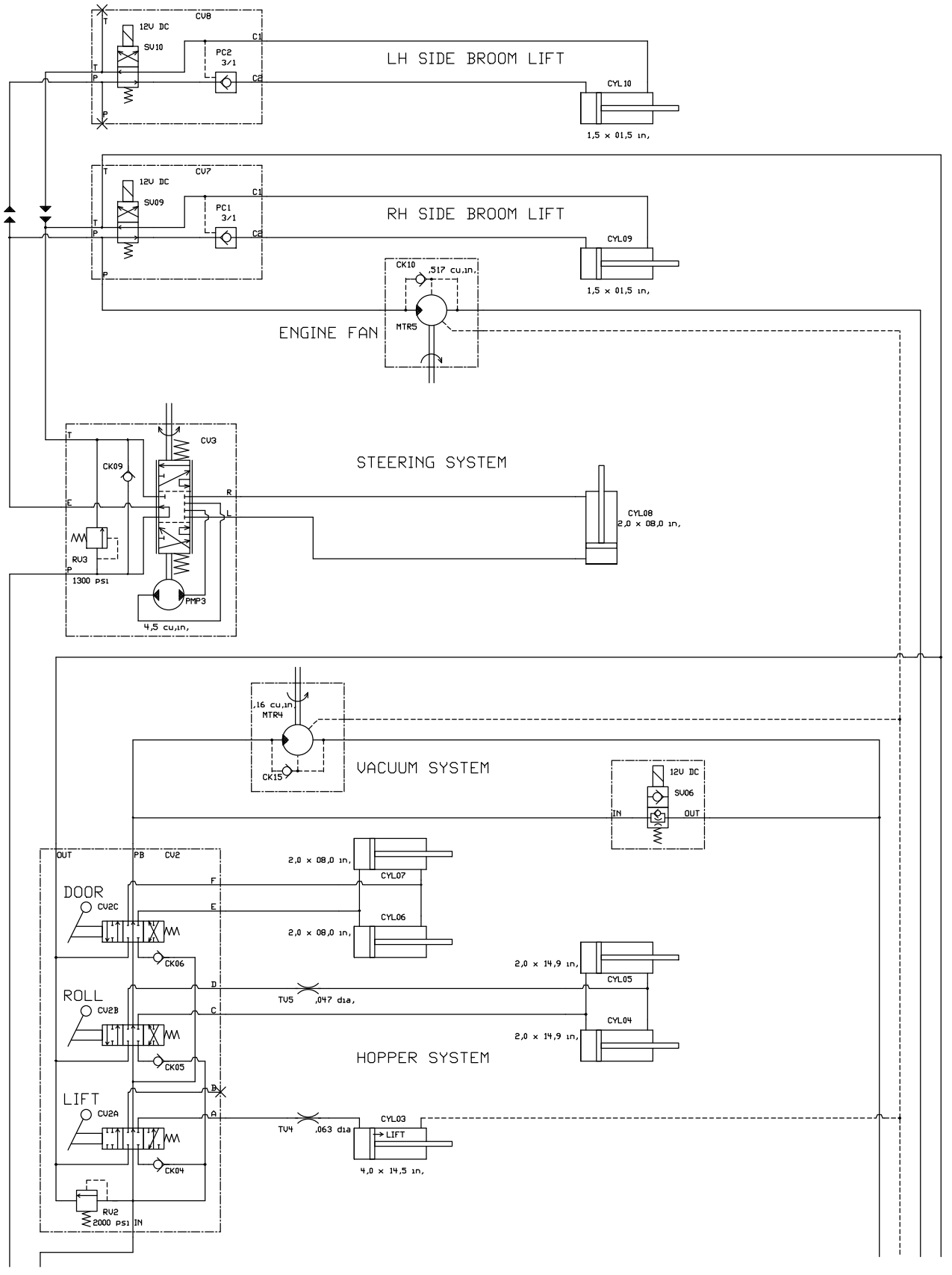

Fig. 39 – Hydraulic Schematic

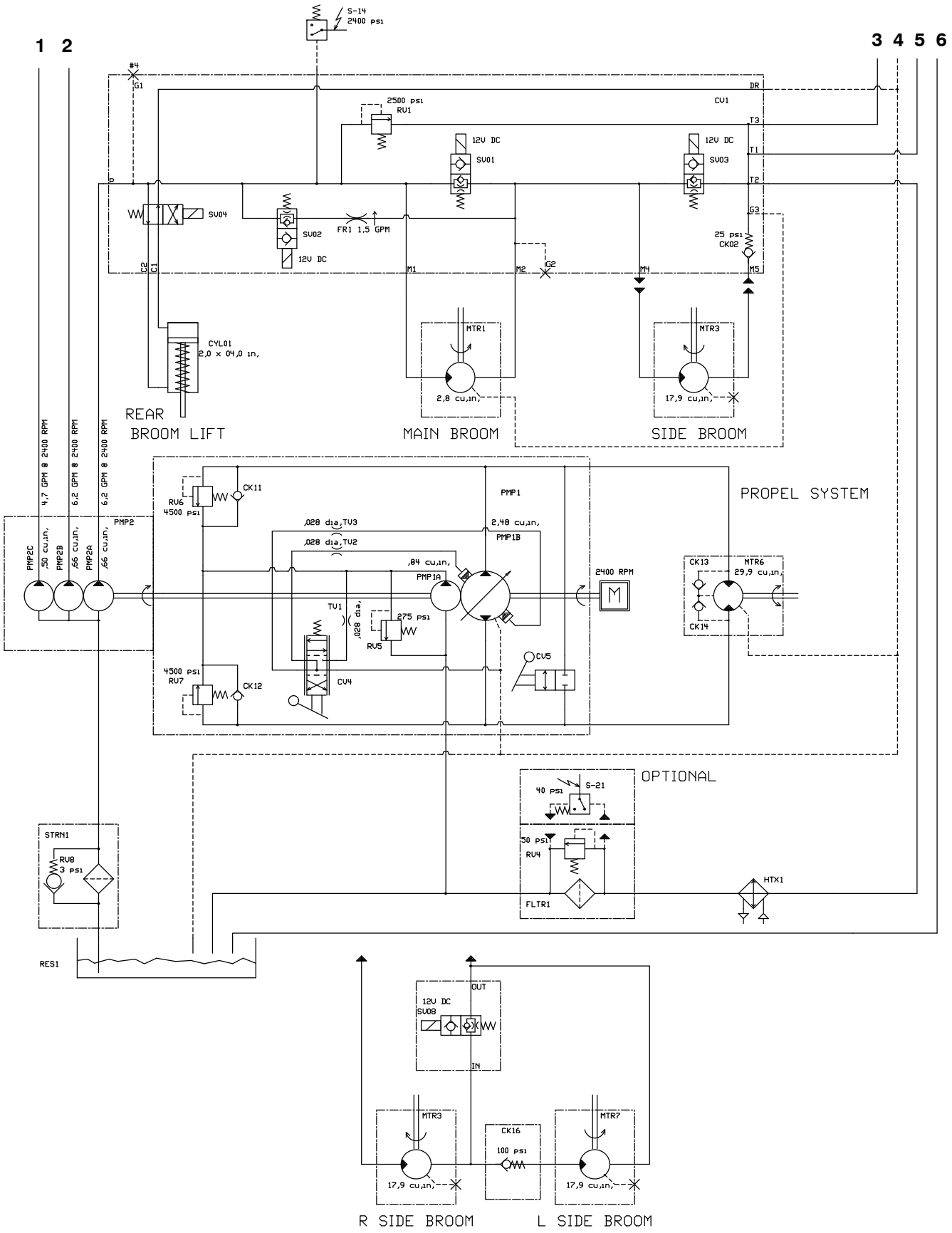

09912 – 800

Fig. 40 – Hydraulic Hose Group

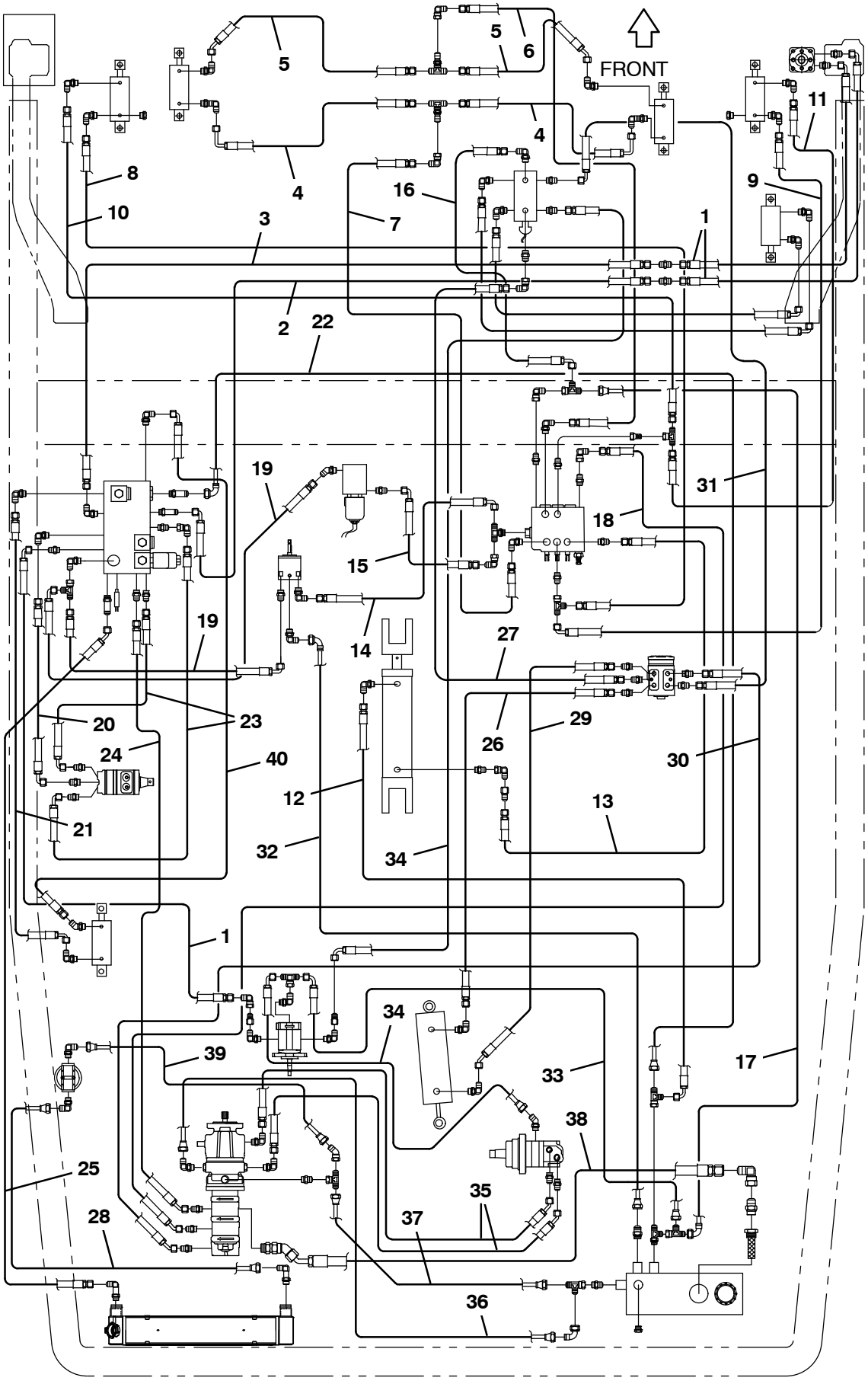

356816 – G, LP

Fig. 40 – Hydraulic Hose Group

Ref.	Part No.	Serial Number	Description	Qty.
1	65194	(008467–)	Hose, Hyd, Med06, Jf06e90/Jf06str, 072.0	3
2	65197	(008467–)	Hose, Hyd, Med08, Jf08e90/Jf08str, 062.0	1
3	65224	(008467–)	Hose, Hyd, Med08, Jf08str/Jf08str, 066.0	1
4	65188	(008467–)	Hose, Hyd, Med04, Jf04e90l/Jf04str,038.0	2
5	57173	(008467–)	Hose, Hyd, Med04, Jf04e45/Jf04str, 034.0	2
6	76498	(008467–)	Hose, Hyd, Tc04, Jf04str/Jf04str, 138.0	1
7	79642	(008467–)	Hose, Hyd, Tc04, Jf04str/Jf04str, 142.0	1
8	21117	(008467–)	Hose, Hyd, Tc04, Jf04str/Jf04str, 098.0	1
9	21119	(008467–)	Hose, Hyd, Tc04, Jf04e90/Jf04str, 092.0	1
10	77641	(008467–)	Hose, Hyd, Tc04, Jf04str/Jf04str, 114.0	1
11	77640	(008467–)	Hose, Hyd, Tc04, Jf04str/Jf04str, 106.0	1
12	71552	(008467–)	Hose, Hyd, Med06, Jf06e90/Jf06str, 046.0	1
13	55700	(008467–)	Hose, Hyd, Med04, Jf04str/Jf04str, 026.0	1
14	82843	(008467–)	Hose, Hyd, Med08, Jf08e90/Jf08str, 028.0	1
15	82820	(008467–)	Hose, Hyd, Med08, Jf08e90/Jf08str, 034.0	1
16	65195	(008467–)	Hose, Hyd, Med06, Jf06e90/Jf06str, 023.0	1
17	65212	(008467–)	Hose, Hyd, Low06, Jf06e90/Jf06str, 060.0	1
18	1073602	(008467–)	Hose, Hyd, Med08, Jf08e45/Jf08str, 112.0	1
19	34355	(008467–)	Hose, Hyd, Med08, Jf08e90/Jf08str, 040.0	2
20	57963	(008467–)	Hose, Hyd, Med04, Jf04e90/Jf04str, 056.0	1
21	34379	(008467–)	Hose, Hyd, Med04, Jf04e90/Jf04str, 072.0	1
22	65213	(008467–)	Hose, Hyd, Low06, Jf06e90/Jf06str, 086.0	1
23	34360	(008467–)	Hose, Hyd, Med08, Jf08e90/Jf08str, 058.0	2
24	33799	(008467–)	Hose, Hyd, Med08, Jf08e45/Jf08str, 060.0	1
25	1075401	(008467–)	Hose, Hyd, Med12, Jf12e45/Jf12str, 064.0	1
26	01987	(008467–)	Hose, Hyd, Med06, Jf06str/Jf06str, 027.0	1
27	16431	(008467–)	Hose, Hyd, Med06, Jf06str/Jf06str, 022.0	1
28	1075402	(008467–)	Hose, Hyd, Med12, Jf12str/Jf12str, 026.0	1
29	76497	(008467–)	Hose, Hyd, Med06, Jf06e45/Jf06str, 035.0	1
30	1073601	(008467–)	Hose, Hyd, Med06, Jf06e45/Jf06str, 118.0	1
31	57944	(008467–)	Hose, Hyd, Med06, Jf06e90/Jf06str, 024.0	1
32	21729	(008467–)	Hose, Hyd, Low04, Jf04e90/Jf04str, 066.0	2
33	31603	(008467–)	Hose, Hyd, Low06, Jf06e90/Jf06str, 052.0	1
34	31563	(008467–)	Hose, Hyd, Med06, Jf06e90/Jf06str, 060.0	2
35	1064170	(008467–)	Hose, Hyd, Tc12, Ff12e45/Ff12str, 045.0	2
36	1073858	(008467–)	Hose, Hyd, Low12, Jf12str/Jf12str, 030.0	1
37	1073858	(008467–)	Hose, Hyd, Low12, Jf12str/Jf12str, 030.0	1
38	1264182	(008467–)	Kit, Hose, Hyd W E45, Jf20/Jm20	1
39	57568	(008467–)	Hose, Hyd, Low12, Jf12str/Jf12str, 018.0	1
40	57581	(008467–)	Hose, Hyd, Med04, Jf04e90/Jf04str, 060.0	1

Fig. 41 – Hydraulic Reservoir Group

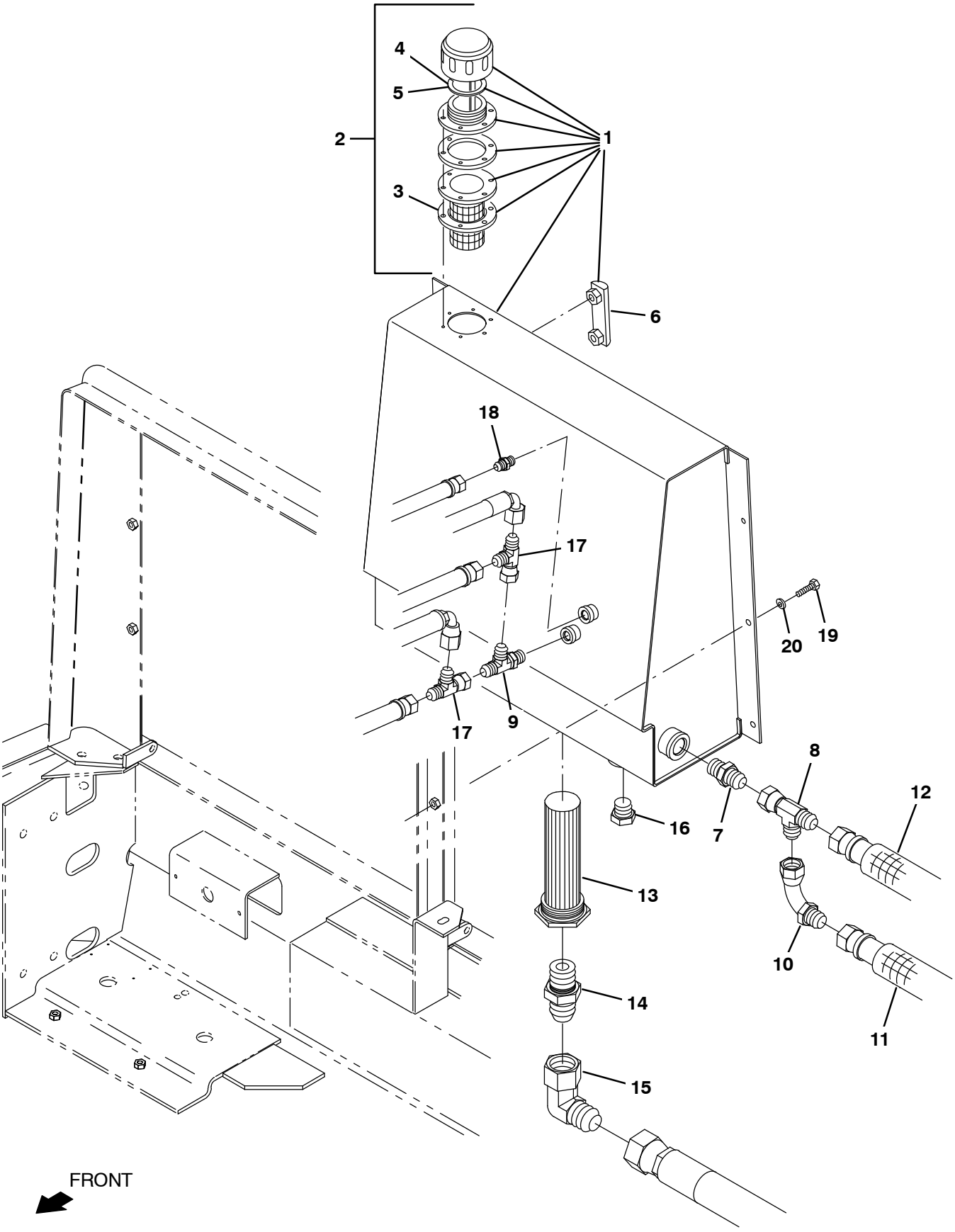

07603 – ALL

Fig. 41 – Hydraulic Reservoir Group

	Ref.	Part No.	Serial Number	Description	Qty.
▽	1	380736	(008467–)	Tank Wldt, Hydraulic w/label	1
▲▽	2	34306	(008467–)	Breather, Hyd	1
▲▲	3	61288	(008467–)	Gasket, Hyd Tank Breather	2
▲▲	4	70072	(008467–)	Breather Cap and Gasket	1
▲▲	5	70006	(008467–)	Gasket, Hyd Cap	1
▲	6	65215	(008467–)	Gauge, Sight Lh	1
	7	42260	(008467–)	Fitting, Hyd, Str, Jm12/Om12	1
	8	40514	(008467–)	Fitting, Hyd, Tee, Jf12/Jm12/Jm12, Run	1
	9	76316	(008467–)	Fitting, Hyd, Tee, Jm06/Jm06/Om06, Run	1
	10	57994	(008467–)	Fitting, Hyd, E90, Jf12/Jm12, Spcl	1
	11	50121	(008467–)	Sleeve, Nyl, 1.63id 08.0l	1
	12	82830	(008467–)	Sleeve, Nyl, 1.63id 16.0l	1
	13	31613	(008467–)	Strainer–Hyd Suction 25–100–03	1
	14	58858	(008467–)	Fitting, Hyd, Str, Jm20/Om20	1
	15	19459	(008467–)	Fitting, Hyd, E90, Jf20/Jm20	1
	16	33817	(008467–)	Fitting, Hyd, Plug, Om12	1
	17	42215	(008467–)	Fitting, Hyd, Tee, Jf06/Jm06/Jm06, Run	2
	18	55586	(008467–)	Fitting, Hyd, Str, Jm04/Om04	1
	19	16931	(008467–)	Screw, Hex, M8 X 1.25 X 20, 8.8	5
	20	32491	(008467–)	Washer, Flat, 0.31, Std	5

Fig. 42 – Hydraulic Filter Group

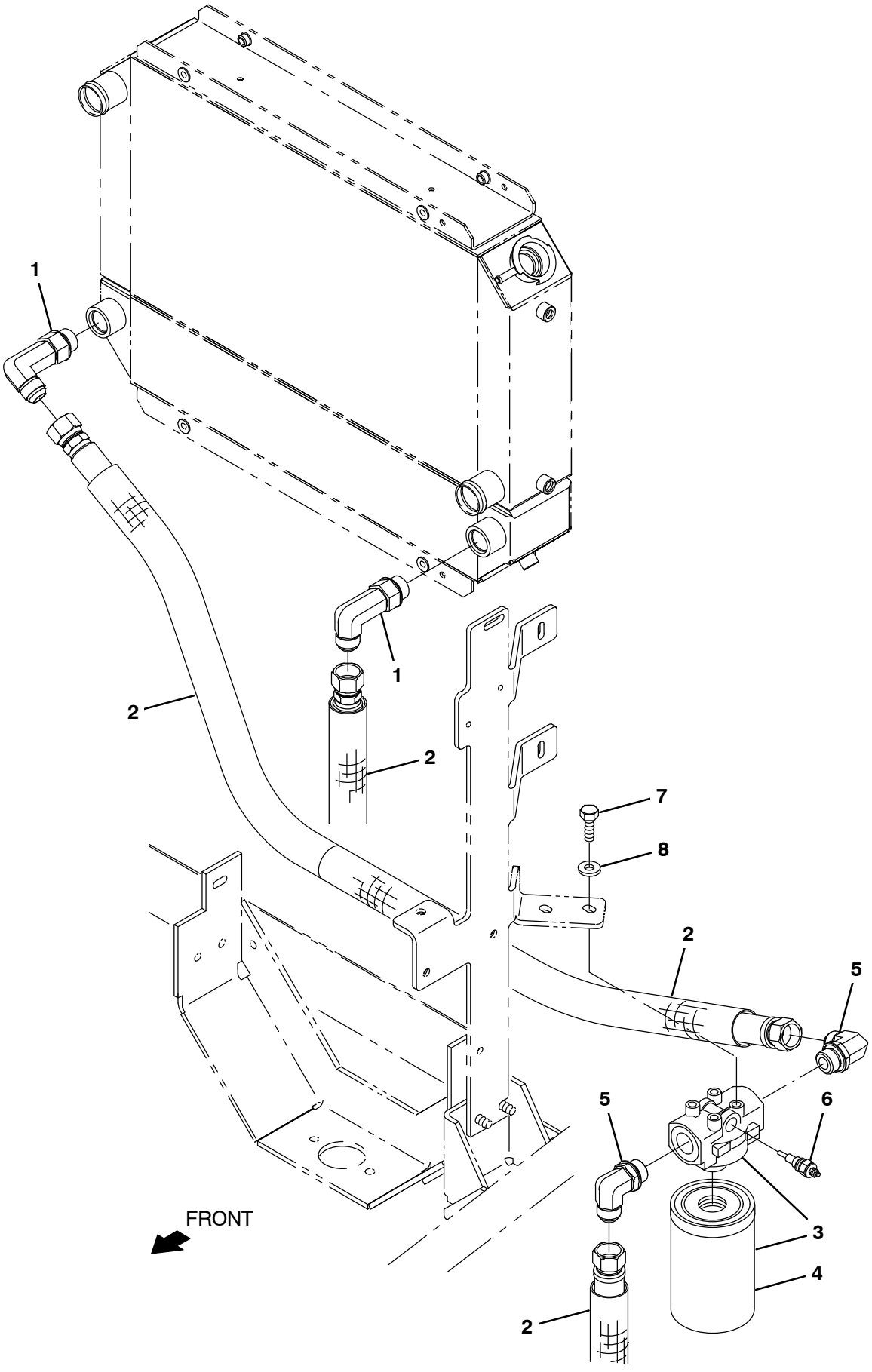

356763 – G, LP

Fig. 42 – Hydraulic Filter Group

	Ref.	Part No.	Serial Number	Description	Qty.
	1	62471	(008467–)	Fitting, Hyd, E90, Jm12/Om12, Long	2
	2	82830	(008467–)	Sleeve, Nyl, 1.63id 16.0l	4
▽	3	10664	(008467–)	Filter Assy, Hyd, 10mic 035gpm, Spin–On	1
▲	4	65221	(008467–)	Element, Fltr, Hyd Oil	1
	5	46481	(008467–)	Fitting, Hyd, E90, Jm12/Om12	2
	6	65222	(008467–)	Send–Unit, Fltr, Hyd	1
	7	21195	(008467–)	Screw, Hex, .38–16 X 0.75, G5	2
	8	41187	(008467–)	Washer, Flat, Belleville, .38	2

Fig. 43 – Hydraulic Solenoid Valve Group

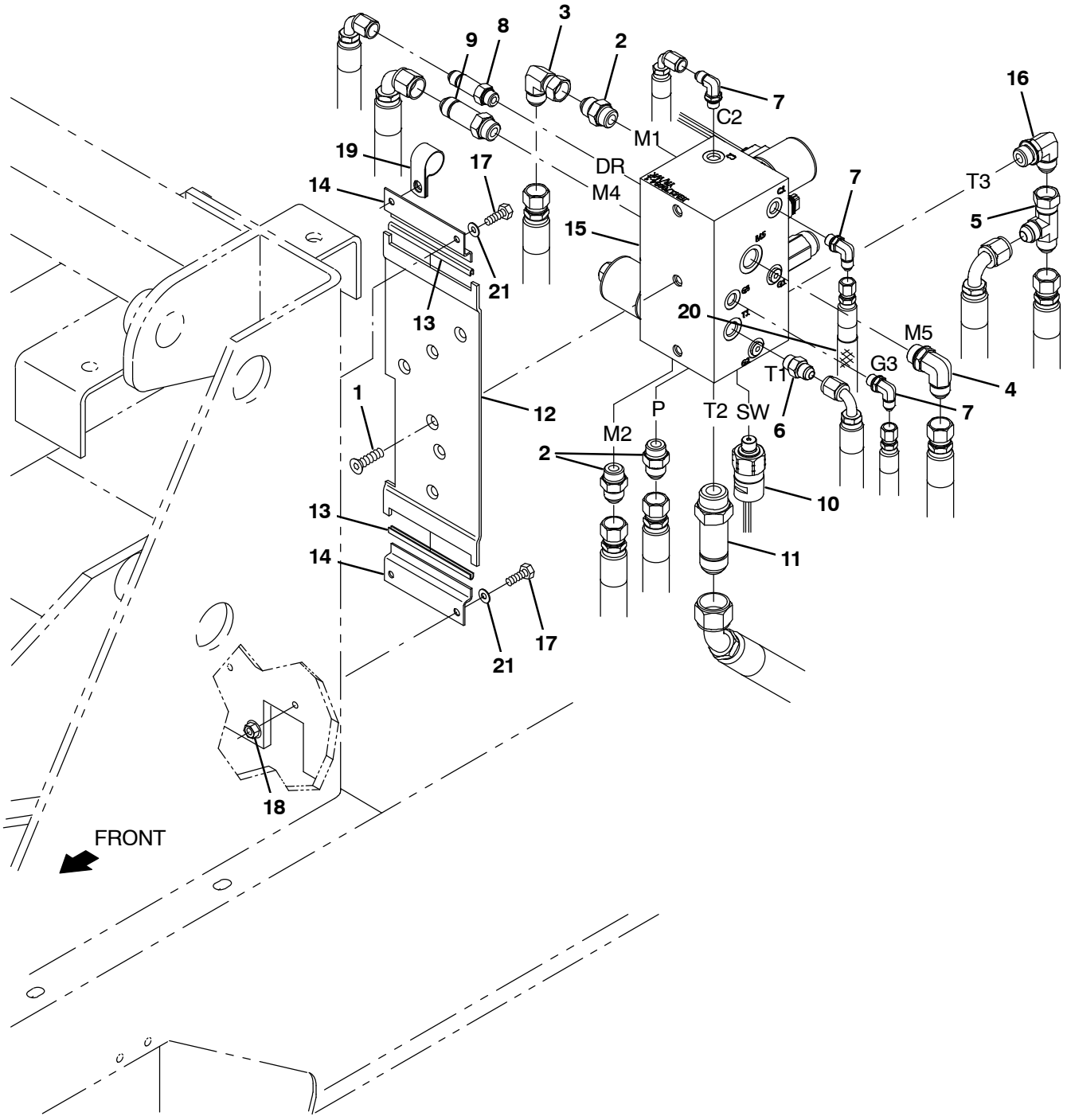

356943 – G, LP

Fig. 43 – Hydraulic Solenoid Valve Group

	Ref.	Part No.	Serial Number		Description	Qty.
	1	32129	(008467–	)	Screw, Flt, Soc, M8 X 1.25 X 20, 10.9	3
	2	44869	(008467–	)	Fitting, Hyd, Str, Jm08/Om08	3
	3	17980	(008467–	)	Fitting, Hyd, E90, Jf08/Jm08	1
	4	44868	(008467–	)	Fitting, Hyd, E90, Jm08/Om08	1
	5	45482	(008467–	)	Fitting, Hyd, Tee, Jf08/Jm08/Jm08, Run	1
	6	56690	(008467–	)	Fitting, Hyd, Str, Jm06/Om06	1
	7	77097	(008467–	)	Fitting, Hyd, E90, Jm04/Om04	3
	8	59577	(008467–	)	Fitting, Hyd, Str, Jm06/Om06, Long	1
	9	31605	(008467–	)	Fitting, Hyd, Str, Jm08/Om08, Long	1
	10	1265802	(008467–	)	Switch Assy, Press, No 02400psi	1
	11	57993	(008467–	)	Fitting, Hyd, Str, Jm12/Om12, Long	1
	12	64228	(008467–	)	Plate, Mtg, Valve, Solenoid	1
	13	10911	(008467–	)	Molding, Trim, Rbr, .13 .38 .5w 04.3l	2
	14	06146	(008467–	)	Bracket, Mounting	2
▽	15	1049209	(008467–008631	)	Valve, Cntrl, Hyd, Solenoid, 12vdc 08gpm (See Breakdowns)	1
▲	16	44868	(008467–008631	)	Fitting, Hyd, E90, Jm08/Om08	1
▽	15	1237090	(008632–	)	Valve, Hyd, Solenoid, 8gpm [1049209] (See Breakdowns)	1
▲	16	9017922	(008632–	)	Fitting Elbow [Ft10064–08–08]	1
	17	06943	(008467–	)	Screw, Hex, M6 X 1.0 X 20, 8.8	4
	18	07790	(008467–	)	Nut, Hex, Flng, M6 X 1.0	4
	19	69234	(008467–	)	Clamp, Cable, Stl, 1.00d X 0.75w, 1h	1
	20	19066	(008467–	)	Washer, Flat, #10	4

Fig. 44 – Hydraulic Lift Valve Group

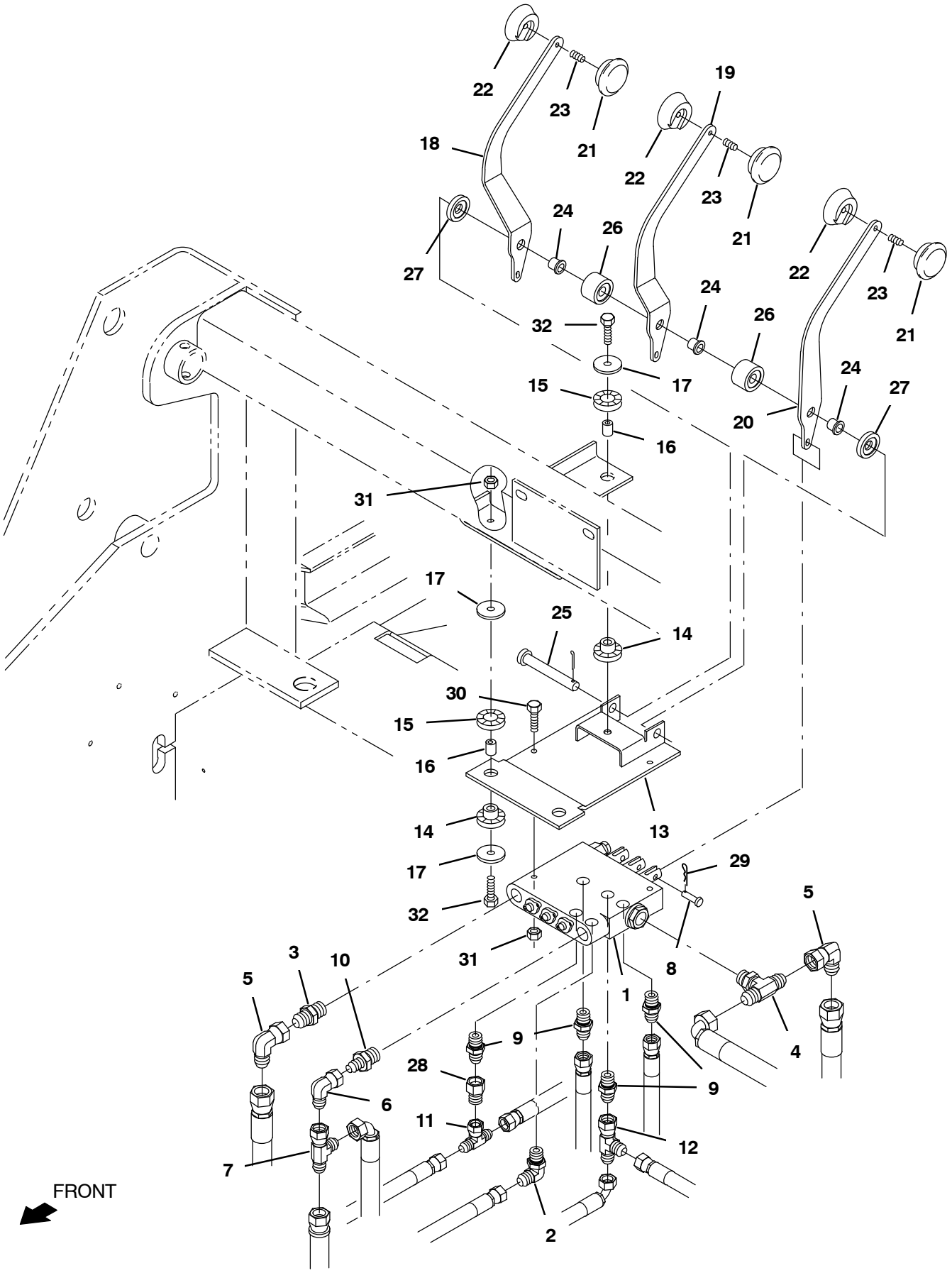

07613 – G, LP

Fig. 44 – Hydraulic Lift Valve Group

Ref.	Part No.	Serial Number	Description	Qty.
1	375563	(008467–)	Valve, Hyd Control Man (See Breakdowns)	1
2	47638	(008467–)	Fitting, Hyd, E90, Jm04/Om06	1
3	44869	(008467–)	Fitting, Hyd, Str, Jm08/Om08	1
4	49933	(008467–)	Fitting, Hyd, Tee, Jm08/Jm08/Om08, Br	1
5	17980	(008467–)	Fitting, Hyd, E90, Jf08/Jm08	2
6	47504	(008467–)	Fitting, Hyd, E90, Jf06/Jm06	1
7	42215	(008467–)	Fitting, Hyd, Tee, Jf06/Jm06/Jm06, Run	2
8	77488	(008467–)	Pin, Clevis, 0.19d X 0.63l	3
9	55685	(008467–)	Fitting, Hyd, Str, Jm04/Om06	3
10	52402	(008467–)	Fitting, Hyd, Str, Jm06/Om08	1
11	57411	(008467–)	Fitting, Hyd, Tee, Jf04/Jm04/Jm04, Br	1
12	57988	(008467–)	Fitting, Hyd, Tee, Jf04/Jm04/Jm04, Run	1
13	77485	(008467–)	Bracket Wldt, Mtg, Valve	1
14	62173	(008467–)	Isolator, Vib, Bshg, 1.4d 0.3l .4b 0.65h	3
15	62172	(008467–)	Isolator, Vib, Ring, 1.4d 0.3l 0.8b	3
16	64905	(008467–)	Tube, 0.26id 0.38od 00.6l, Stl, Pl	3
17	1014491	(008467–)	Washer, Flat, 0.28b 1.38d .12, Hrs Pl	5
18	1073833	(008467–)	Handle, Valve, Hyd, Rh [800 Gray]	1
19	1073834	(008467–)	Handle, Valve, Hyd, Ctr [800 Gray]	1
20	1073835	(008467–)	Handle, Valve, Hyd, Lh [800 Gray]	1
21	64434	(008467–)	Knob, Rnd, 2.00d 0.65l M6, Plstc	3
22	70827	(008467–)	Knob, Rnd, 2.00d 0.84l M6, Plstc	3
23	70847	(008467–)	Screw, Set, Soc, M6 X 1.00 X 20, Pl[45h]	3
24	36556	(008467–)	Bushing, Flng, 0.50b 0.56d 0.22l, Nyl	3
25	06474A	(008467–)	Pin, Clevis, 0.50d X 3.50l	1
26	77498	(008467–)	Spacer	2
27	77499	(008467–)	Spacer	2
28	16455	(008467–)	Fitting, Hyd, Rst, Jf04/Jm04, .047	1
29	08085	(008467–)	Pin, Cotter, Hair, 0.31d .058 Wir	3
30	06949	(008467–)	Screw, Hex, M6 X 1.00 X 50, 8.8	2
31	08708	(008467–)	Nut, Hex, Lock, M6 X 1.00, Nl	4
32	06947	(008467–)	Screw, Hex, M6 X 1.00 X 40, 8.8	2

Fig. 45 – Side Brush Motor Group

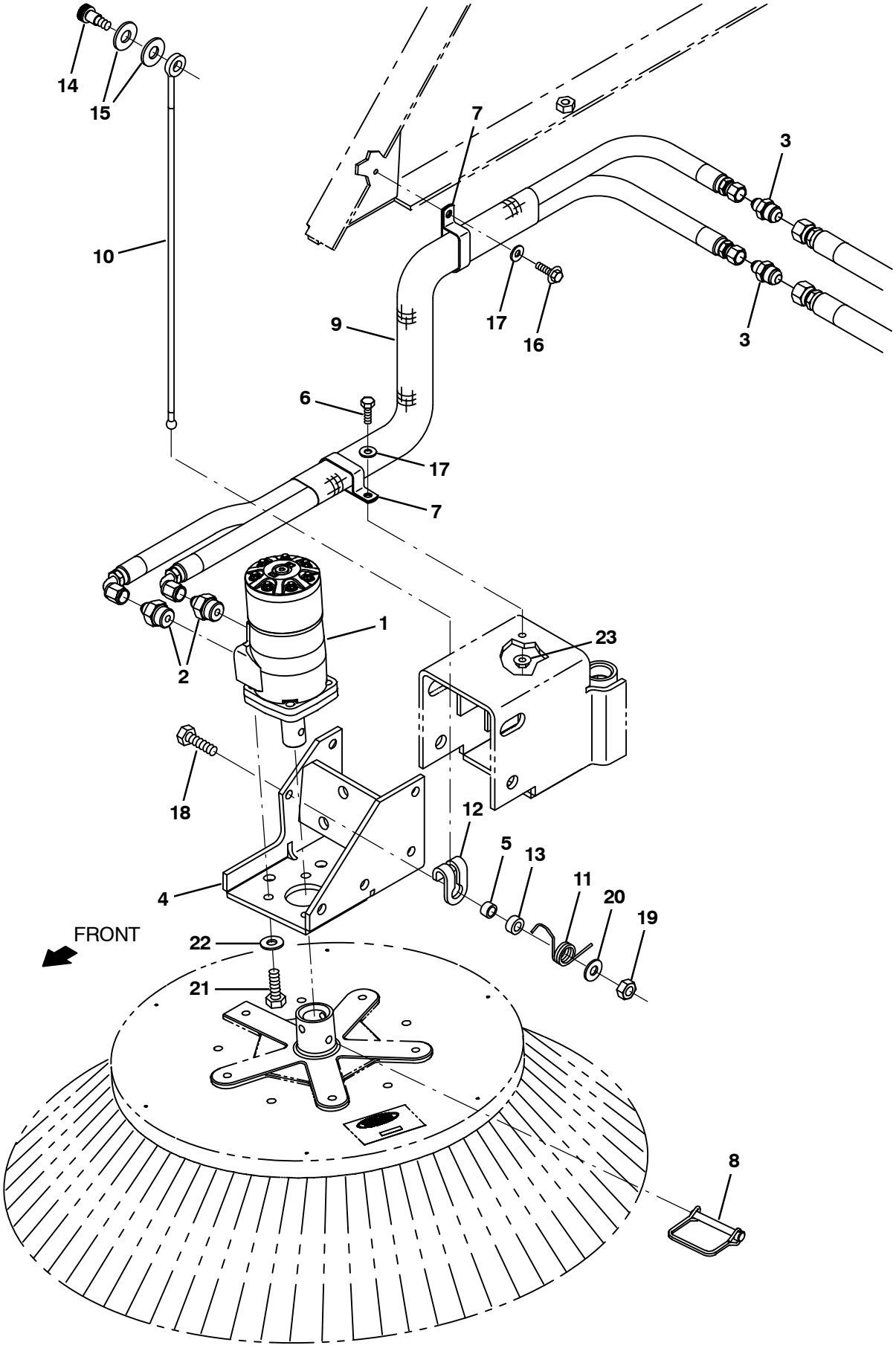

356597 – G, LP

Fig. 45 – Side Brush Motor Group

Ref.	Part No.	Serial Number	Description	Qty.
1	1057338	(008467–)	Motor, Hyd, Gear, Int 17.9 Bi–Dir 2500	1
2	47508	(008467–)	Fitting, Hyd, Str, Jm06/Om10	2
3	42207	(008467–)	Fitting, Hyd, Str, Jm06/Jm08	2
4	1074288	(008467–)	Bracket Wldt, Mtg, Motor[800 Gray]	1
5	65174	(008467–)	Tube, 0.44id 0.62od 00.4l, Stl	5
6	06944	(008467–)	Screw, Hex, M6 X 1.00 X 25, 8.8	1
7	67366	(008467–)	Clamp, Cable, Stl, 1.0x2.0x0.62w, 1hole	1
8	84581	(008467–)	Pin Assy, Side Brush W/ Clip	1
9	75028	(008467–)	Sleeve, Nyl, 1.63id 65.0l	1
10	375401	(008467–)	Cable, Glv .19d 020.3l .44ball /.50eye	1
11	375402	(008467–)	Spring, Tors, 0.81id .09wir 0.3coil, Rh	1
12	1017898	(008467–)	Hook, Cable, .44d Ball	1
13	375404	(008467–)	Tube, 0.44id 0.75od 00.3l, Stl, Pl	1
14	36758	(008467–)	Bolt, Shld, .50d X 0.50, .38–16	1
15	32486	(008467–)	Washer Flat,0.50,Sae	2
16	12459	(008467–)	Screw, Hex, M6 X 1.00 X 20, Fmg	1
17	41185	(008467–)	Washer, Flat, Belleville, .25	2
18	39284	(008467–)	Screw, Hex, M10 X 1.50 X 35, 8.8	1
19	41430	(008467–)	Nut, Hex, Lock, M10 X 1.5, Nl	4
20	32492	(008467–)	Washer, Flat, 0.38, Std	1
21	34195	(008467–)	Screw, Hex, .38–16 X	4
22	32485	(008467–)	Washer, Flat, 0.38, Sae	4
23	07790	(008467–)	Nut, Hex, Flng, M6 X 1.00	1

Fig. 46 – Side Brush Pivot Group

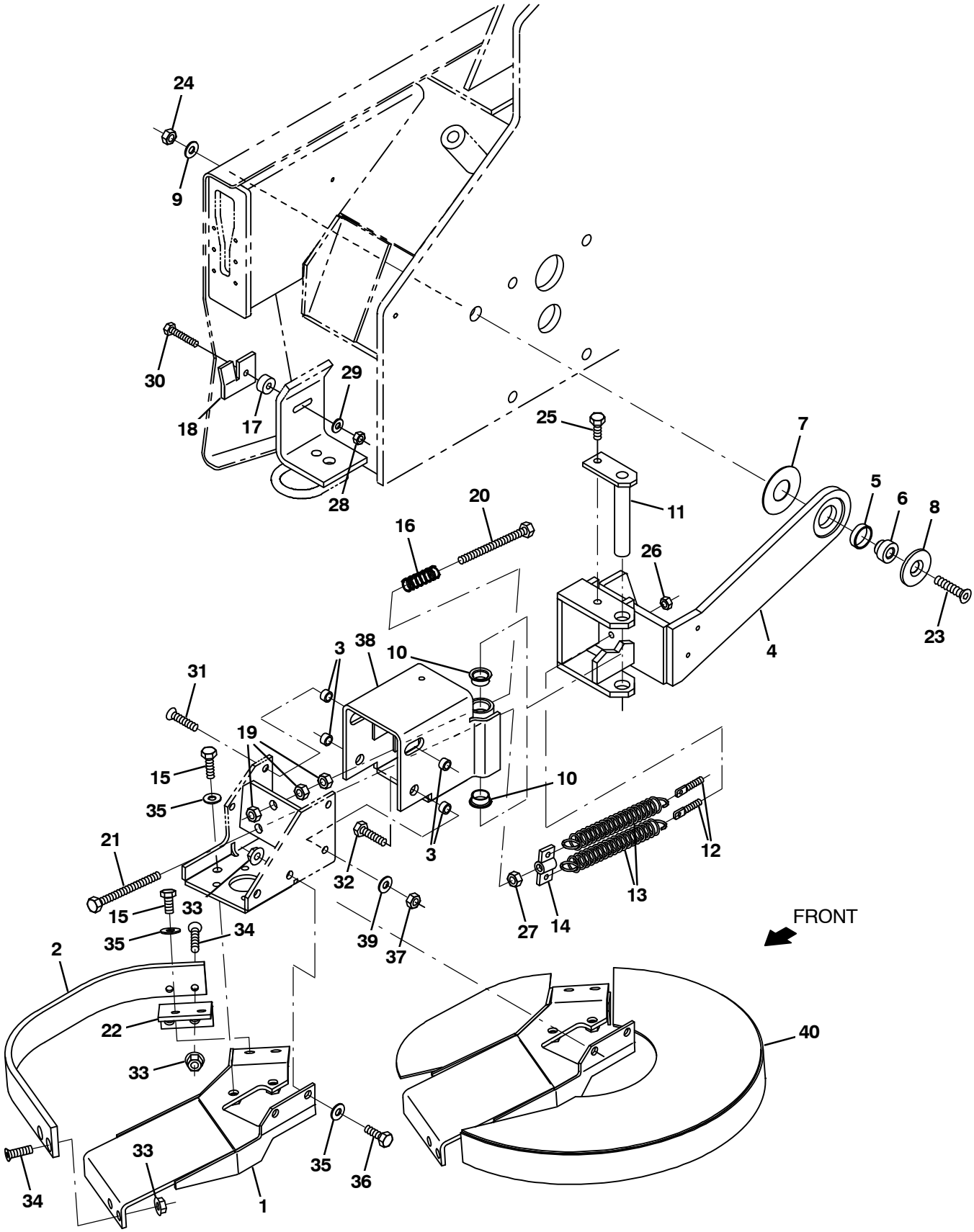

356598 – G, LP

Fig. 46 – Side Brush Pivot Group

Ref.	Part No.	Serial Number	Description	Qty.
1	1074293	(008467–)	Bracket Wldt, Mtg, Guard, Side Brush	1
2	1074286	(008467–)	Guard, Brush, Side .38th 2.0w [800]	1
3	65174	(008467–)	Tube, 0.44id 0.62od 00.4l, Stl	4
4	1074291	(008467–)	Arm Wldt, Pivot, Side Brush [800 Gray]	1
5	70627	(008467–)	Bushing, Sleeve, 1.25b 1.40d 0.38l, Bnz	1
6	70526	(008467–)	Shaft, Pivot	1
7	70524	(008467–)	Washer, Flat, 1.30b 3.00d .06, Stl	1
8	70525	(008467–)	Washer, Flat, 0.71b 2.25d .19, Stl, Csk	1
9	36328	(008467–)	Washer, Flat, Belleville, .50	1
10	04761	(008467–)	Bushing, Flng, 0.50b 0.59d 0.38l	2
11	70431	(008467–)	Pin Wldt, Pivot, Brush, Side	1
12	70626	(008467–)	Bolt, Eye, M8 X 1.25 X 051mm, 05.50 Eye	2
13	65160	(008467–)	Spring, Extn, 1.00od 0.15wir 05.8l	2
14	1074290	(008467–)	Bracket Wldt, Spring [800 Gray]	1
15	09770	(008467–)	Screw, Hex, M10 X 1.50 X 25, Nl, Ss	4
16	65180	(008467–)	Spring, Dsl, 1.00od 0.50id 1.70l	1
17	74059	(008467–)	Tube, 0.34id 1.00od 00.5l, Stl, Pl	1
18	1074292	(008467–)	Bracket, Guide, Arm, Side Brush, Rh	1
19	07787	(008467–)	Nut, Hex, Std, M10 X 1.50, Ss	3
20	06537	(008467–)	Screw, Hex, M10 X 1.50 X 120, 8.8, Fl	1
21	76438	(008467–)	Screw, Hex, M10 X 1.50 X 90, 8.8, Fl	1
22	1074287	(008467–)	Bracket, Angle, Mtg, Side Brush	1
23	20192	(008467–)	Screw, Flt, Soc, .50–13 X 2.00, Al	1
24	32985	(008467–)	Nut, Hex, Lock, .50–13, Nl	1
25	09291	(008467–)	Screw, Hex, M10 X 1.50 X 20, Ss	1
26	39311	(008467–)	Nut, Hex, Std, M8 X 1.25	2
27	39312	(008467–)	Nut, Hex, Std, M10 X 1.50	1
28	08709	(008467–)	Nut, Hex, Lock, M8 X 1.25, Nl	1
29	32491	(008467–)	Washer, Flat, 0.31, Std	1
30	41342	(008467–)	Screw, Hex, M8 X 1.25 X 40, 8.8	1
31	06535	(008467–)	Screw, Flt, Soc, M10 X 1.50 X 35, 10.9	1
32	39284	(008467–)	Screw, Hex, M10 X 1.50 X 35, 8.8	2
33	07792	(008467–)	Nut, Hex, Flng, M10 X 1.50	8
34	09081	(008467–)	Screw, Flt, Soc, M10 X 1.50 X 25, 10.9	4
35	32485	(008467–)	Washer, Flat, 0.38, Sae	5
36	39283	(008467–)	Screw, Hex, M10 X 1.50 X 25, 8.8	2
37	41430	(008467–)	Nut, Hex, Lock, M10 X 1.5, Nl	4
38	1074289	(008467–)	Bracket Wldt, Pivot, Side Brush [Gray]	1
39	32492	(008467–)	Washer, Flat, 0.38, Std	6

Fig. 47 – Side Brush Lift Group

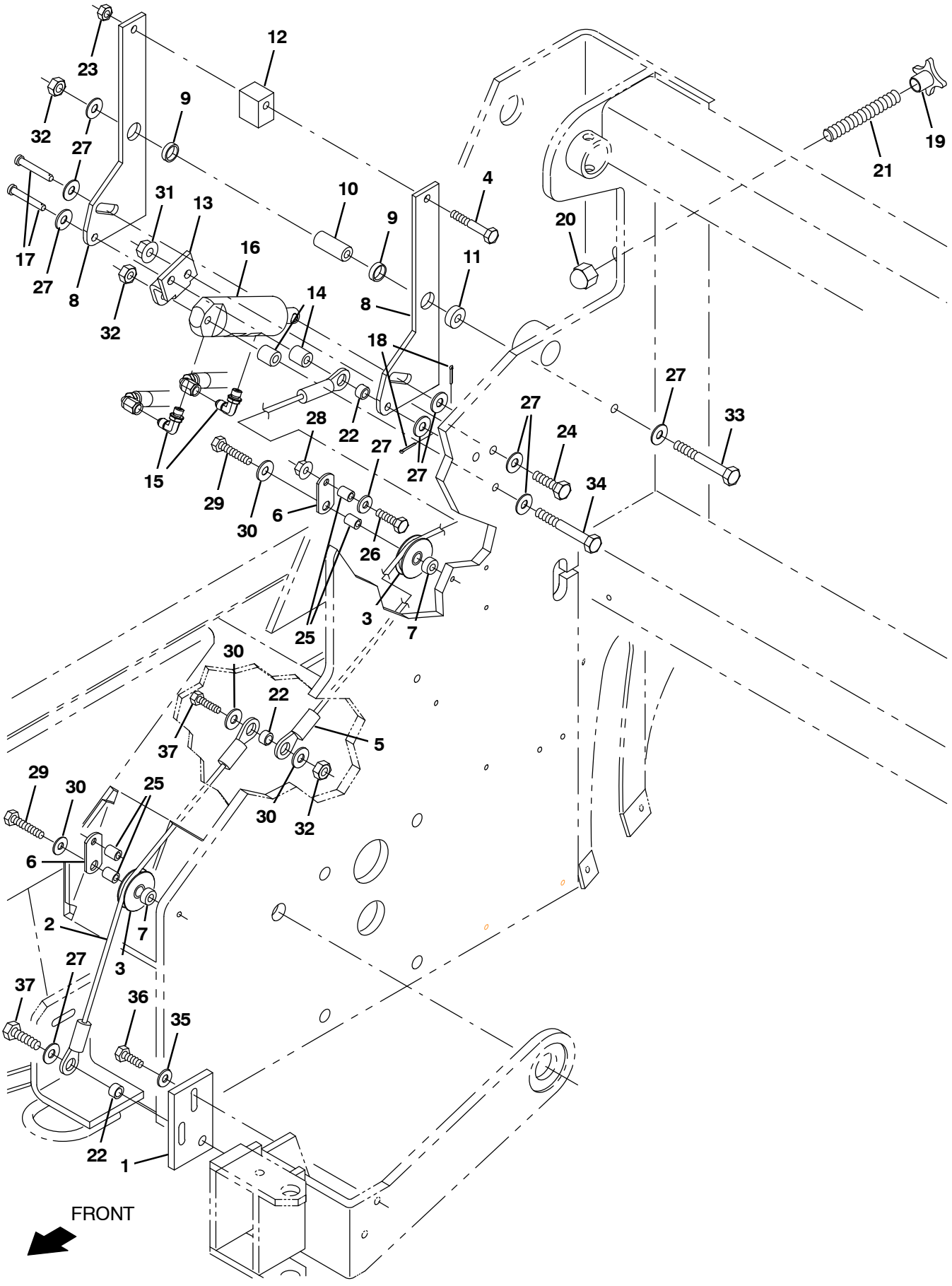

354239 – G, LP

Fig. 47 – Side Brush Lift Group

Ref.	Part No.	Serial Number	Description	Qty.
1	77669	(008467–)	Plate Wldt, Mtg, Side Brush Pivot Arm	1
2	70532	(008467–)	Cable, Glv .25d 021.2l .63eye /.63eye	1
3	74391	(008467–)	Pulley Assy, Cable, 2.0d 0.50b	2
5	23936	(008467–)	Cable, Glv .25d 016.8l .64eye /.64eye	1
4	06957	(008467–)	Screw, Hex, M8 X 1.25 X 60, 8.8	1
6	375415	(008467–)	Link, 0.12, 1.0w 02.2l 1/0.3h 1/0.5h	2
7	73737	(008467–)	Tube, 0.38id 0.75od 00.3l, Ss	2
8	77584	(008467–)	Plate, Mtg, Cyl, Side Brush	2
9	74090	(008467–)	Bushing, Sleeve, 0.75b 0.88d 0.25l	2
10	77597	(008467–)	Tube, 0.41id 0.75od 01.8l, Stl	1
11	77727	(008467–)	Tube, 0.44id 1.00od 00.4l, Stl	1
12	77459	(008467–)	Bar, Flat, Stl 1.00, 01.20 X 01.5l	1
13	77601	(008467–)	Plate, Angle, Mtg, Cyl	1
14	77600	(008467–)	Tube, 0.41id 0.75od 00.8l, Stl	1
15	77097	(008467–)	Fitting, Hyd, E90, Jm04/Om04	2
16	1041034	(008467–)	Cylinder, Hyd, 1.5b 06.3l 01.50strk 2500	1
17	51813	(008467–)	Pin, Clevis, 0.37d X 2.12l	2
18	08179	(008467–)	Pin, Cotter, .094 X 1.00	2
19	77605	(008467–)	Knob, Star, 2.50d 5ear 1.5l .62–18,Plstc	1
20	41131	(008467–)	Nut, Low Crown, .62–18	1
21	77682	(008467–)	Rod, Thrd, Full, .62–18 05.0l	1
22	65174	(008467–)	Tube, 0.44id 0.62od 00.4l, Stl	3
23	08709	(008467–)	Nut, Hex, Lock, M8 X 1.25, Nl	1
24	39284	(008467–)	Screw, Hex, M10 X 1.5 X 35, 8.8	1
25	80395	(008467–)	Sleeve, P/M, 0.32b 0.50d 0.7l [430ss]	4
26	76570	(008467–)	Screw, Hex, M8 X 1.25 X 30, 8.8	2
27	32492	(008467–)	Washer, Flat, 0.38, Std	9
28	07791	(008467–)	Nut, Hex, Flng, M8 X 1.25	2
29	41342	(008467–)	Screw, Hex, M8 X 1.25 X 40, 8.8	2
30	33924	(008467–)	Washer, Flat, M10, Ss	4
31	07792	(008467–)	Nut, Hex, Flng, M10 X 1.5	2
32	08714	(008467–)	Nut, Hex, Lock, M10 X 1.5, Nl, Ss	2
33	03193	(008467–)	Screw, Hex, M10 X 1.5 X 90, 8.8	1
34	06965	(008467–)	Screw, Hex, M10 X 1.5 X 80, 8.8	1
35	32491	(008467–)	Washer, Flat, 0.31 Std	1
36	09010	(008467–)	Screw, Hex, M8 X 1.25 X 25, Ss	2
37	09770	(008467–)	Screw, Hex, M10 X 1.5 X 25, Nl, Ss	2

Fig. 48 – Side Brush Hydraulic Solenoid Valve Group

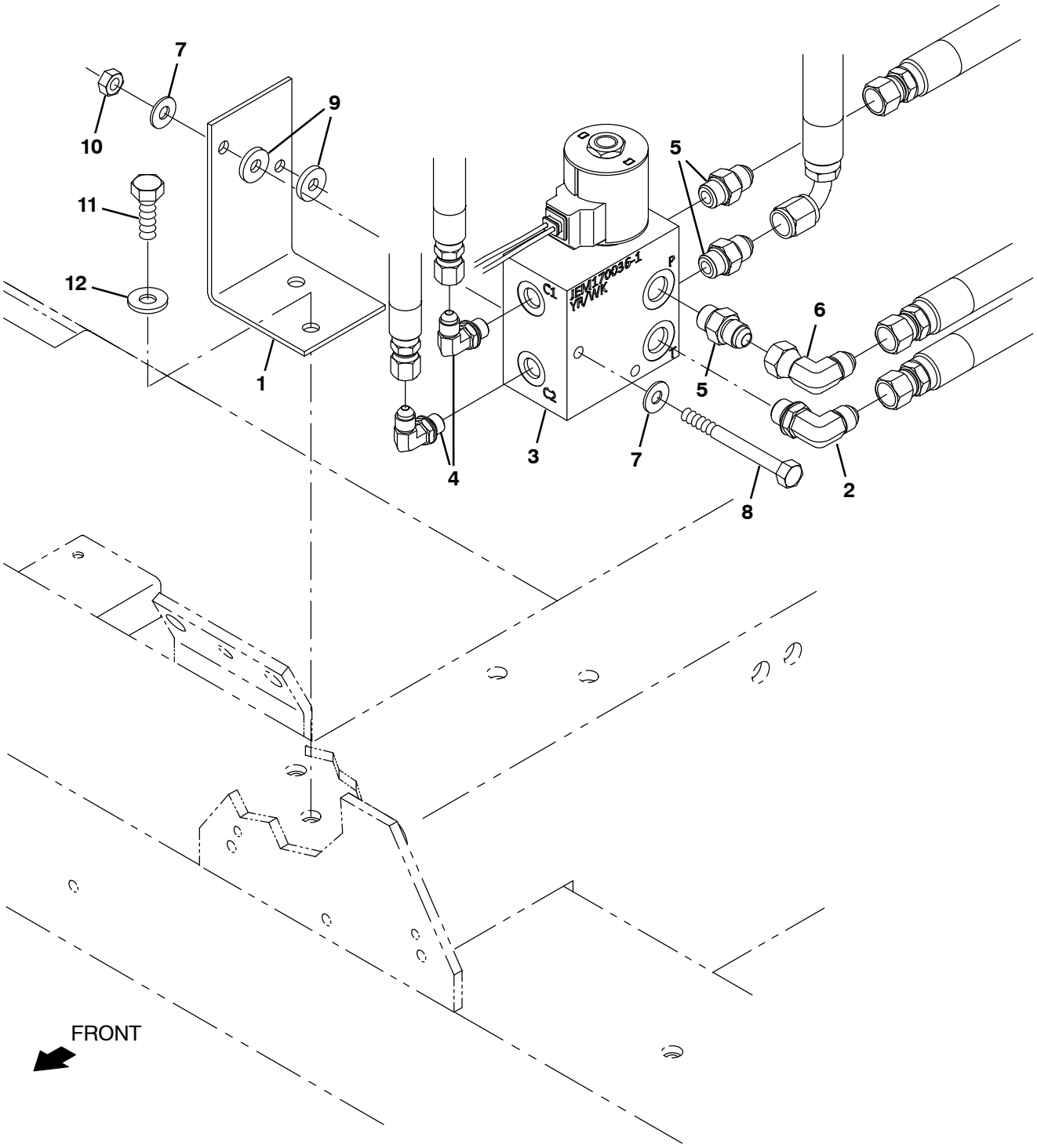

356814 – G, LP

Fig. 48 – Side Brush Hydraulic Solenoid Valve Group

Ref.	Part No.	Serial Number	Description	Qty.
1	21231	(008467–)	Plate	1
2	56820	(008467–)	Fitting, Hyd, E90, Jm06/Om06	1
3	1049211	(008467–008631)	Valve, Cntrl, Hyd, Solenoid, 12vdc 06gpm (See Breakdowns)	1
3	1237092	(008632–)	Valve, Hyd, Solenoid, 6gpm [1049211] (See Breakdowns)	1
4	77097	(008467–)	Fitting, Hyd, E90, Jm04/Om04	2
5	56690	(008467–)	Fitting, Hyd, Str, Jm06/Om06	3
6	47504	(008467–)	Fitting, Hyd, E90, Jf06/Jm06	1
7	19066	(008467–)	Washer, Flat, #10	4
8	06950	(008467–)	Screw, Hex, M6 X 1.0 X 70, 8.8	2
9	63416	(008467–)	Washer, Rbr, .12 0.31b 0.88d	2
10	08708	(008467–)	Nut, Hex, Lock, M6 X 1.0, Nl	2
11	16931	(008467–)	Screw, Hex, M8 X 1.25 X 20, 8.8	2
12	32491	(008467–)	Washer, Flat, 0.31 Std	3

Fig. 49 – Main Brush Drive Group

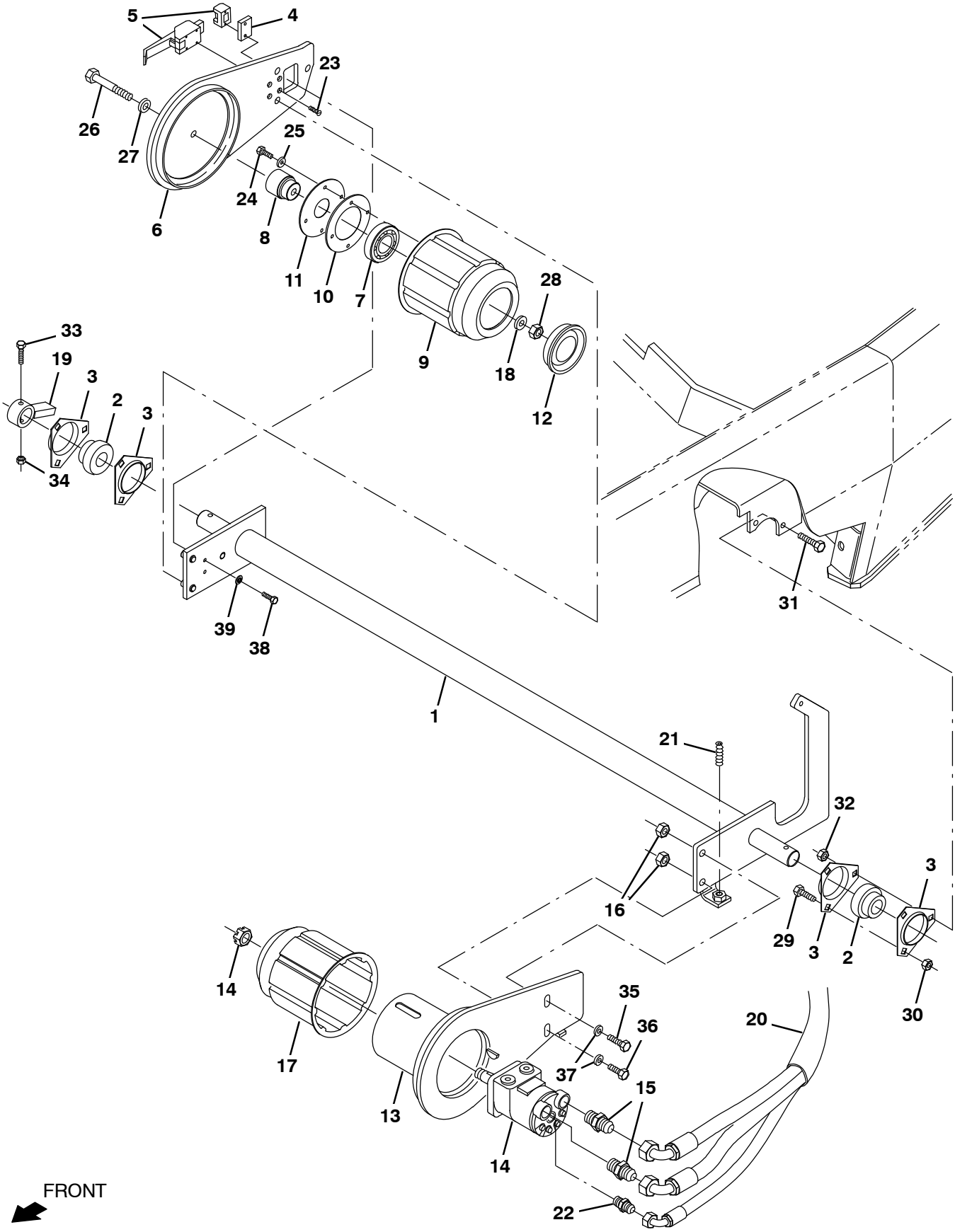

07569 – G, LP

Fig. 49 – Main Brush Drive Group

Ref.	Part No.	Serial Number	Description	Qty.
1	63436	(008467–)	Shaft Wldt, Main Brush	1
2	51448	(008467–)	Bearing&Clr ,1.25B 2.44D 1.41W	2
3	51449	(008467–)	Flange,Brg,3 Hole	4
4	63541	(008467–)	Plate, Mtg, Latch	1
5	54878	(008467–)	Latch	1
6	63449	(008467–)	Arm Wldt, M Br, Idler	1
7	24899	(008467–)	Bearing–Ball,1.38B 2.83D 0.67W	1
8	30251	(008467–)	Shaft, Idler	1
9	55779	(008467–)	Plug Wldt, Idler	1
10	30252	(008467–)	Strip, Retainer, Bearing	1
11	30253	(008467–)	Plate, Seal	1
12	30255	(008467–)	Plug, Tube	1
13	63450	(008467–)	Arm Wldt, M Br, Motor	1
14	1057337	(008467–)	Motor, Hyd, Gear, Int 02.8 Bi–Dir 2500	1
15	44869	(008467–)	Fitting, Hyd, Str Jm08/Om08	2
16	07793	(008467–)	Nut, Hex, Flng, M12 X 1.75	2
17	1057643	(008467–)	Plug Wldt, Drive, Brush	1
18	51564	(008467–)	Washer, .531B 1.75D .12Cr.Znc	1
19	64811	(008467–)	Bar Wldt, Brush Pressure	1
20	34330	(008467–)	Sleeve, Hyd 30”	1
21	75612	(008467–)	Screw, Set	1
22	55586	(008467–)	Ftg–Hyd Str Jm04/Om04	1
23	09120	(008467–)	Screw, Flt, M5 X 0.8 X 16, 10.9	4
24	12274	(008467–)	Screw, Hex, M6 X 1.0 X 20, 8.8, Nl	4
25	32483	(008467–)	Washer, Flat, 0.25 Sae	4
26	32895	(008467–)	Screw, Hex, .50–13 X 3.50, 5	1
27	36328	(008467–)	Washer, Belleville, .50	1
28	02931	(008467–)	Nut, Hex, Lock, .50–13, Nl, Ss	1
29	10819	(008467–)	Bolt, Carriage, .38–16 X 1.00	2
30	50902	(008467–)	Nut, Hex, Lock, .38–16, Nl	2
31	39283	(008467–)	Screw, Hex, M10 X 1.5 X 25, 8.8	4
32	07792	(008467–)	Nut, Hex, Flng, M10 X 1.5	4
33	06957	(008467–)	Screw, Hex, M8 X 1.25 X 60, 8.8	1
34	08709	(008467–)	Nut, Hex, Lock, M8 X 1.25, Nl	1
35	06968	(008467–)	Screw, Hex, M12 X 1.75 X 35, 8.8	1
36	41346	(008467–)	Screw, Hex, M12 X 1.75 X 30, 8.8	1
37	32486	(008467–)	Washer, Flat, 0.50 Sae	2
38	12316	(008467–)	Screw, Hex, M5 X 0.80 X 25, Ss	2
39	07514	(008467–)	Washer, Lock, Int, 10, Ss	2

Fig. 50 – Main Brush Lift Group

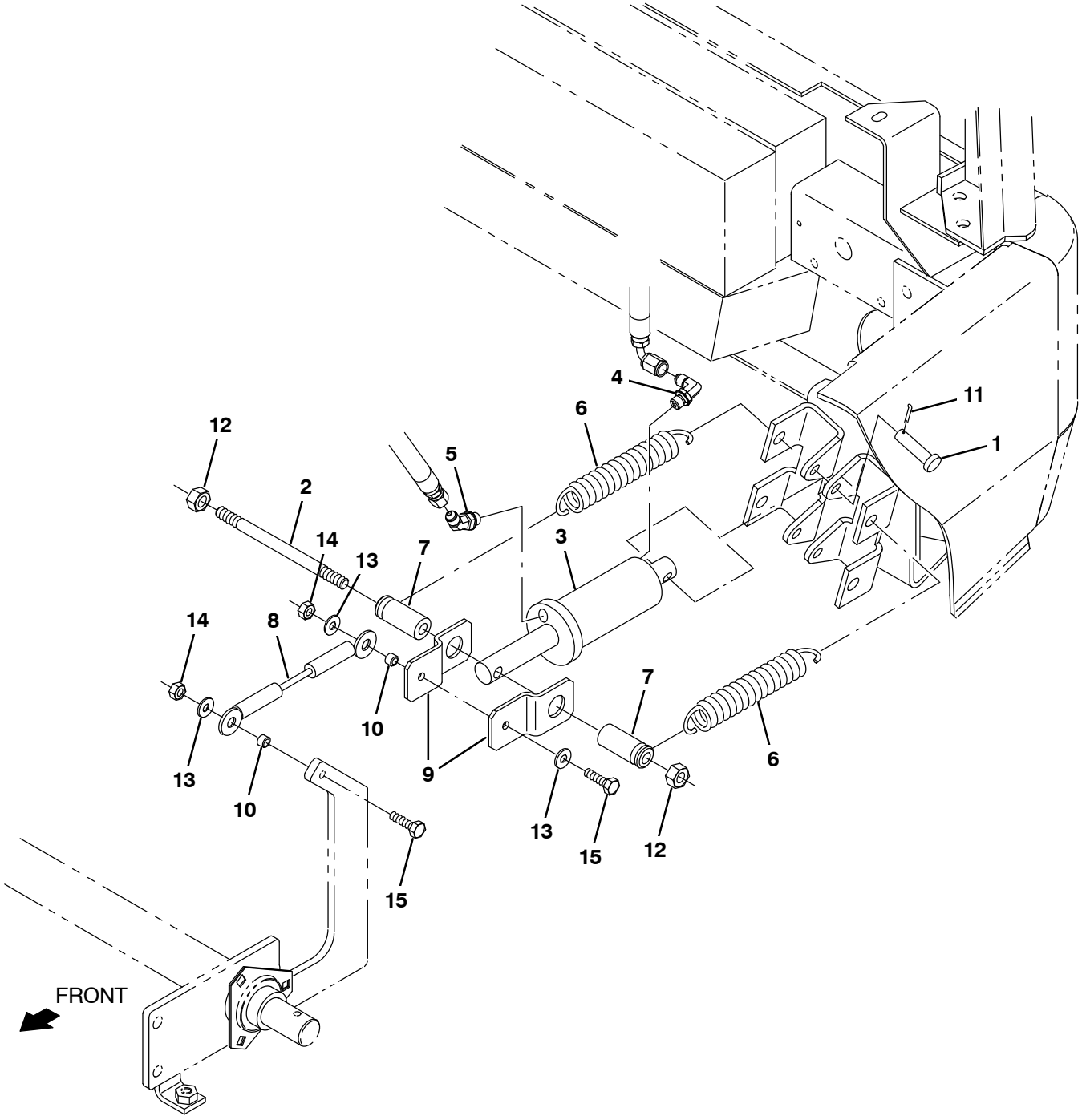

07579 – G, LP

Fig. 50 – Main Brush Lift Group

Ref.	Part No.	Serial Number	Description	Qty.
1	51534	(008467–)	Pin,Clevis,0.50 Dia.X 2.00 Lg	1
2	1012657	(008467–)	Rod, Thrd, 2 End .50–13 05.75	1
3	1038176	(008467–)	Cylinder, Hyd, 2.0b 08.0l 04.00strk 2500	1
4	77097	(008467–)	Fitting, Hyd, E90 Jm04/Om04	1
5	34359	(008467–)	Fitting, Hyd, E45 Jm04/Om04	1
6	33404	(008467–)	Spring, Tension	2
7	1012656	(008467–)	Tube, Mach, Retainer, Spring , 1.0d 1.7l	2
8	64233	(008467–)	Cable, Lift, Main Brush	1
9	65248	(008467–)	Bracket, Brush Lift, Main	2
10	65249	(008467–)	Tube, Spacer, Brush Lift	2
11	08182	(008467–)	Pin, Cotter, .125 X 1.00	1
12	76570	(008467–)	Screw, Hex, M8 X 1.25 X 30, 8.8	2
13	32491	(008467–)	Washer, Flat, 0.31, Std	3
14	08709	(008467–)	Nut, Hex, Lock, M8 X 1.25, Nl	2
15	32523	(008467–)	Nut, Hex, Jam, .50–13	2

Fig. 51 – Main Brush Adjustment Group

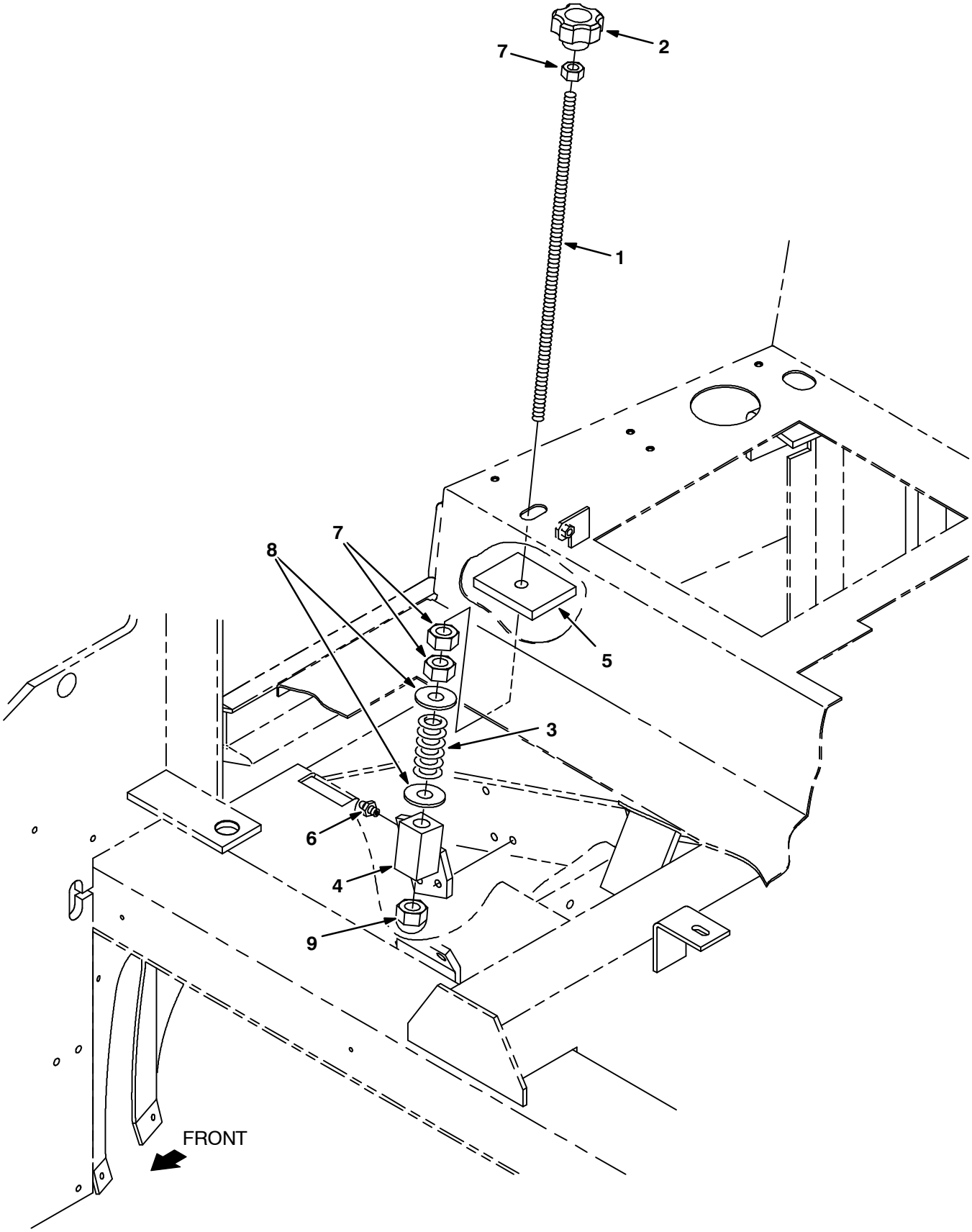

09816 – ALL

Fig. 51 – Main Brush Adjustment Group

Ref.	Part No.	Serial Number	Description	Qty.
1	77578	(008467–)	Rod, Thread	1
2	77605	(008467–)	Knob, Plastic	1
3	51693	(008467–)	Sprng,Comp,0.87Idx.10Wire 2.5L	1
4	77580	(008467–)	Plate, Adj, Brush	1
5	79028	(008467–)	Seal, Rod, Adjuster	1
6	11716	(008467–)	Ftg, Grease.12 Npt 45 .88L	1
7	77583	(008467–)	Nut, Hex, Std, .62–18	3
8	15331	(008467–)	Washer, Flat, 0.62, Sae	2
9	41131	(008467–)	Nut, Low Crown, .62–18	1

Fig. 52 – Vacuum Fan Impeller Group

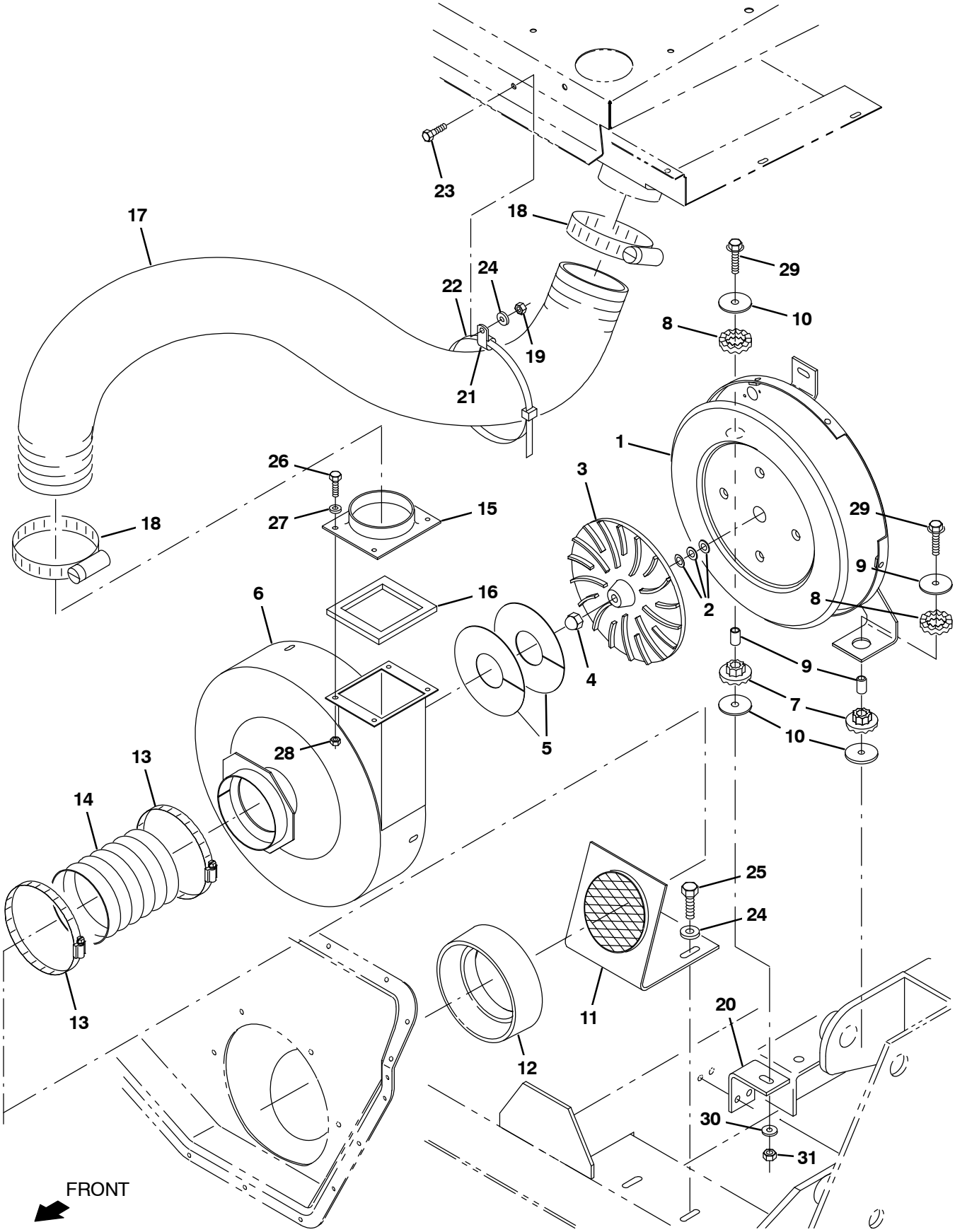

07590 – G, LP

Fig. 52 – Vacuum Fan Impeller Group

Ref.	Part No.	Serial Number	Description	Qty.
1	1074357	(008467–)	Housing Wldt, Vac Fan, Rear	1
2	75456	(008467–)	Shim .003Th 0.88Odx0.506Id	1
2	75456–1	(008467–)	Shim .005Th 0.88Odx0.506Id	1
2	75456–2	(008467–)	Shim .010Th 0.88Odx0.506Id	1
2	75456–3	(008467–)	Shim .020Th 0.88Odx0.506Id	3
2	75456–4	(008467–)	Shim .060Th 0.880Dxo.506Id	3
3	03922	(008467–)	Impeller 9.5 Dia. 18 Blade Mac	1
4	41130	(008467–)	Nut–Low Crown .50–20 Pltd	1
5	58114	(008467–)	Fan, Repair Kit, Reassembly	1
6	77532	(008467–)	Housing Wldt, Vac Fan, Front	1
7	64621	(008467–)	Bushing, Isolator	2
8	64618	(008467–)	Ring, Isolator, Outer Rbr	2
9	64299	(008467–)	Spacer	2
10	58228	(008467–)	Plate, Spring – Side Brush	4
11	70825	(008467–)	Bracket Wldt, Fan Inlet	1
12	21241	(008467–)	Gasket Kit, Vacfan, Replmt [800l]	1
13	1201434	(008467–)	Clamp, Hose, Wormdrive, 4.63–5.50, 0.5w	2
14	73646	(008467–)	Hose, Fan Inlet	1
15	73650	(008467–)	Insulation, Acoustic, Fan	1
16	77553	(008467–)	Plate, Vac Fan	1
17	40870–8	(008467–)	Hose&cuff Assy, Vinyl4.0Idx50	1
18	23498	(008467–)	Clamp–Wormdrive, 2.63– 4.50D	2
19	08709	(008467–)	Nut, Hex, Lock, M8 X 1.25, Nl	1
20	375721	(004380–)	Bracket, Angle	1
21	69234	(008467–)	Clamp, Cable, Stl, 1.00d X 0.75w, 1h	1
22	763113	(008467–)	Tie, Cable, 20.0l, 6.00d Max	1
23	16931	(008467–)	Screw, Hex, M8 X 1.25 X 20, 8.8	1
24	32491	(008467–)	Washer, Flat, 0.31 Std	3
25	76570	(008467–)	Screw, Hex, M8 X 1.25 X 30, 8.8	2
26	06943	(008467–)	Screw, Hex, M6 X 1.0 X 20, 8.8	4
27	32483	(008467–)	Washer, Flat, 0.25, Sae	4
28	08708	(008467–)	Nut, Hex, Lock, M6 X 1.00, Nl	4
29	16930	(008467–)	Screw, Hex, M10 X 1.5 X 50, 8.8	2
30	41430	(008467–)	Nut, Hex, Lock, M10 X 1.5, Nl	2
31	32492	(008467–)	Washer, Flat, 0.38, Std	2

Fig. 53 – Vacuum Fan Motor Group

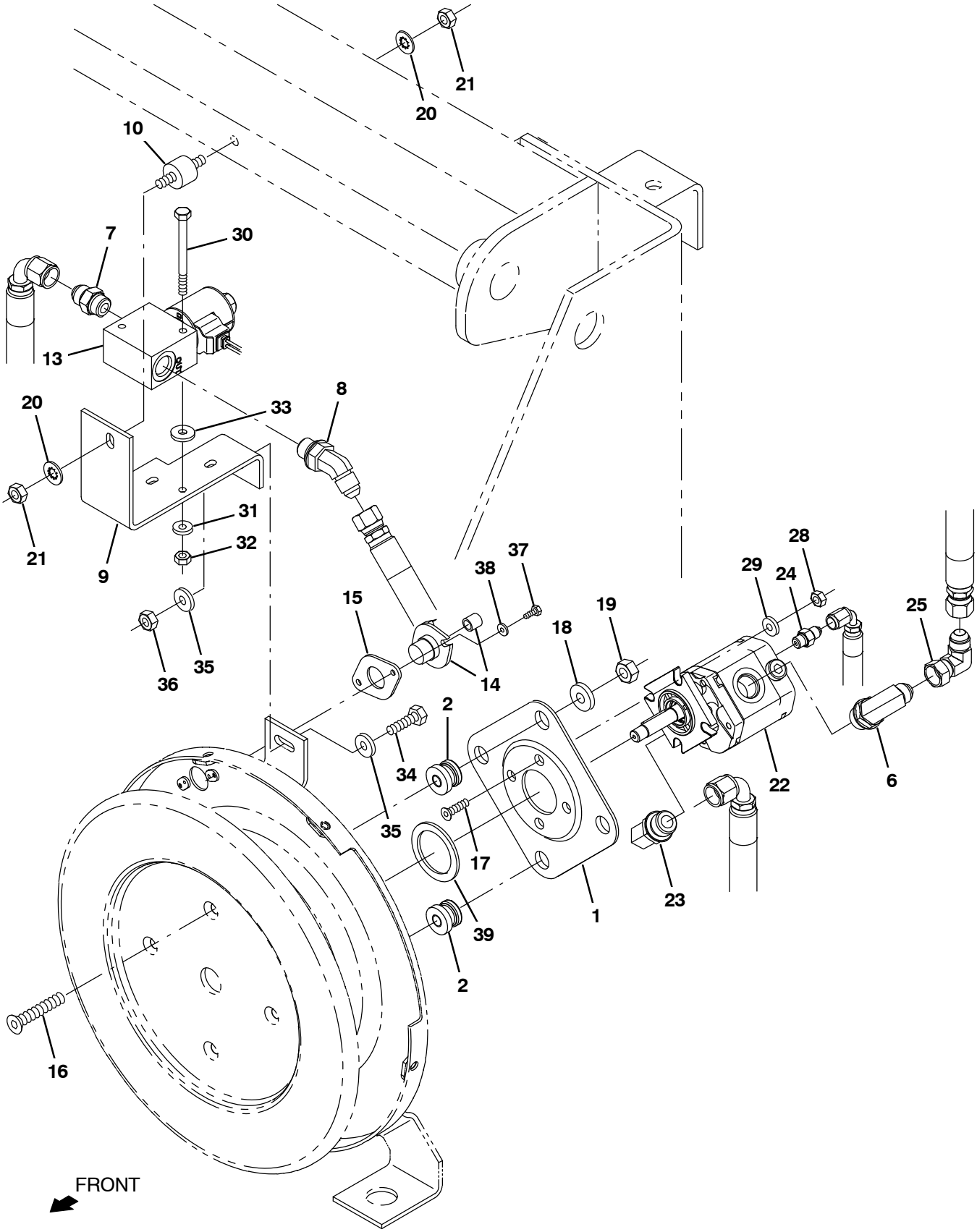

07607 – G, LP

Fig. 53 – Vacuum Fan Motor Group

Ref.	Part No.	Serial Number	Description	Qty.
1	54275A	(008467–)	Bracket, Mounting Motor	1
2	54274	(008467–)	Isolator–Vibration,60 Lb.Ratng	4
3	63416	(008467–)	Washer, Flat, 0.31b 0.88d .12, Rbr	2
4	76570	(008467–)	Screw, Hex, M8 X 1.25 X 30, 8.8	1
5	32491	(008467–)	Washer, Flat, 0.31, Std	2
6	56821	(008467–)	Fitting, Hyd, E90, Jm08/Om10	1
7	44869	(008467–)	Fitting, Hyd, Str, Jm08/Om08	1
8	42226	(008467–)	Fitting, Hyd, E45, Jm08/Om08	1
9	70775	(008467–)	Bracket, Mtg, Valve	1
10	05611	(008467–)	Isolator, Vibration	1
11	08709	(008467–)	Nut, Hex, Lock, M8 X 1.25, Nl	1
12	09206	(008467–)	Screw, Hex, M4 X 0.70 X 12, 8.8	2
13	1049210	(008467–008631)	Valve, Cntrl, Hyd, Solenoid, 12vdc 12gpm (See Breakdowns)	1
13	1237091	(008632–)	Valve, Hyd, Solenoid, 12gpm [1049210](See Breakdowns)	1
14	9012095	(008467–)	Sensor Assy, Thermal	1
15	82733	(008467–)	Gasket, Fire Switch	1
16	54862	(008467–)	Screw, Flt, Soc, .38–16 X 1.75, Al	4
17	39534	(008467–)	Screw, Flt, Soc, .25–20 X 1.00, Al	4
18	13248	(008467–)	Washer, Flat, 0.40b 1.12d .12, Stl, Pl	4
19	50902	(008467–)	Nut, Hex, Lock, .38–16, Nl	4
20	32984	(008467–)	Washer, Lock, Int, 0.31	2
21	19313	(008467–)	Nut, Hex, Std, .31–18	2
22	1076027	(008467–)	Motor, Hyd, Gear, Ext 0.17 Lh 3000	1
23	56821	(008467–)	Fitting, Hyd, E90, Jm08/Om10	1
24	55586	(008467–)	Fitting, Hyd, Str, Jm04/Om04	1
25	17980	(008467–)	Fitting, Hyd, E90, Jf08/Jm08	1
26	19065	(008467–)	Washer, Flat, 0.19b 0.44d .05, Pl, 08	2
27	80392	(008467–)	Gasket, Ure, .13, 1.75id 2.31od	1
28	32981	(008467–)	Nut, Hex, Lock, .25–20, Nl	4
29	32483	(008467–)	Washer, Flat, 0.25, Sae	4
30	06952	(008467–)	Screw, Hex, M6 X 1.00 X 90, 8.8	2
31	19066	(008467–)	Washer, Flat, 0.25b 0.56d .05, Pl, 10	4
32	08708	(008467–)	Nut, Hex, Lock, M6 X 1.00, Nl	2

Fig. 54 – Electrical Schematic

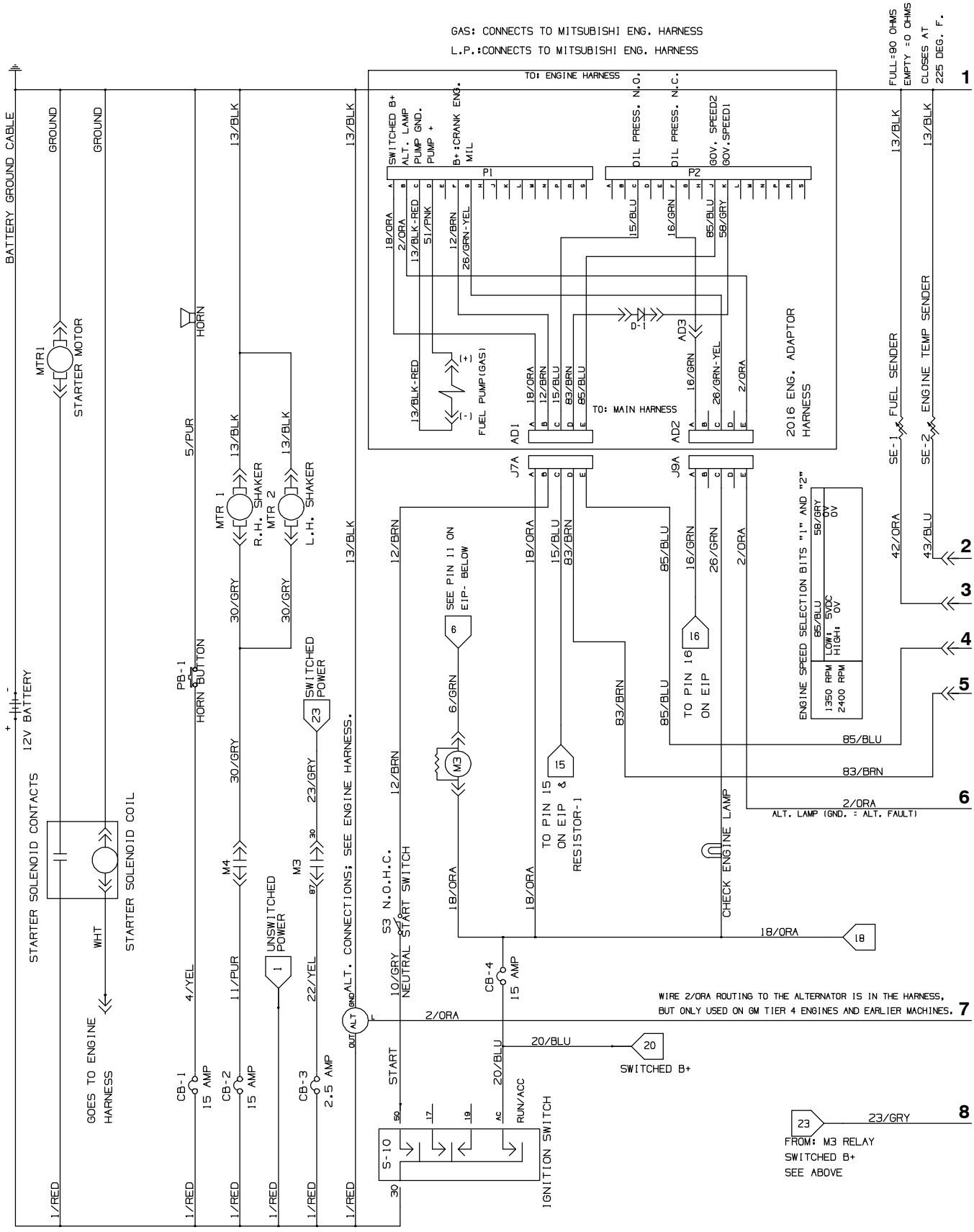

356723, 1075148 – G, LP

Fig. 54 – Electrical Schematic

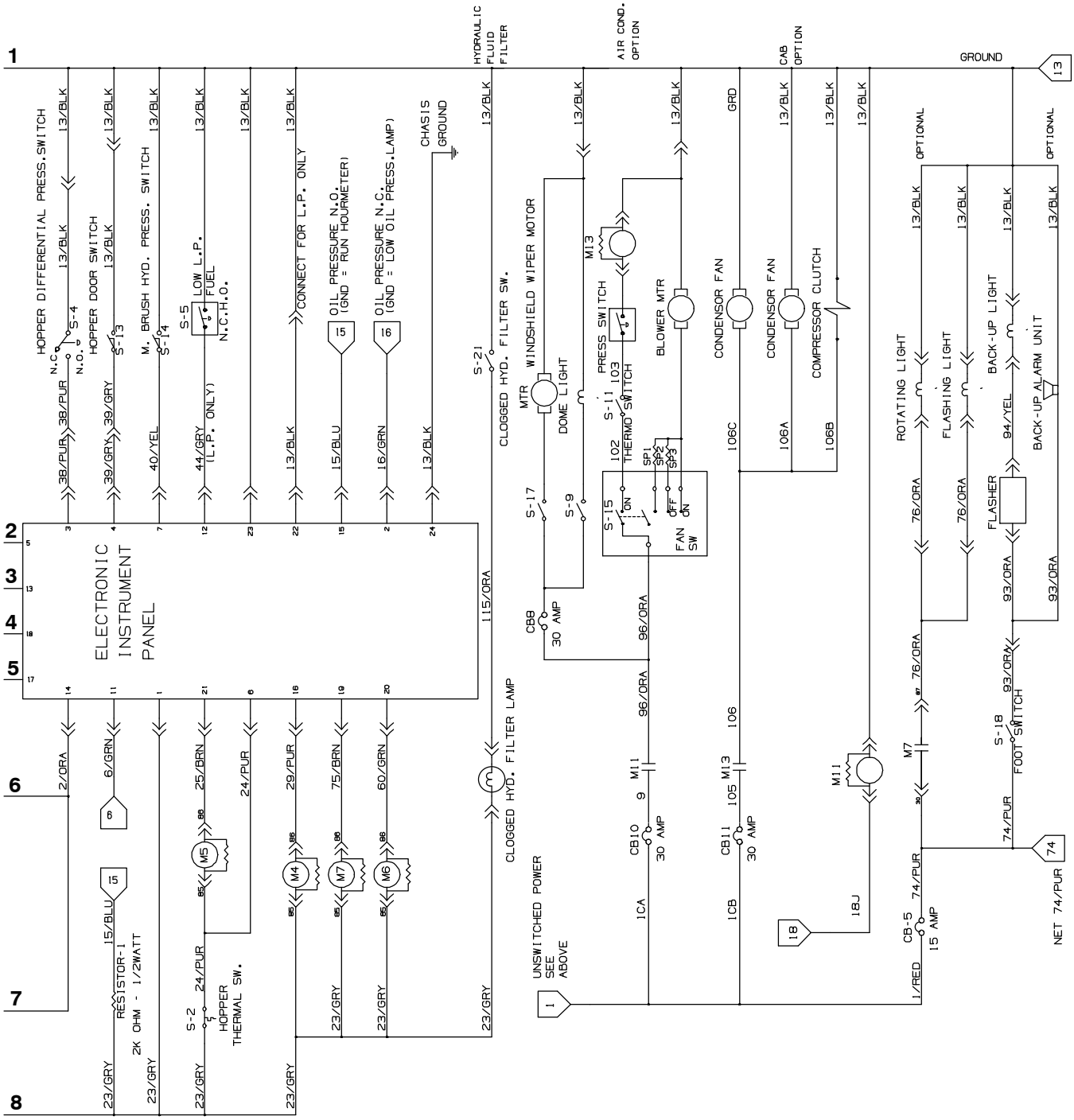

356723, 1075148 – G, LP

Fig. 54 – Electrical Schematic

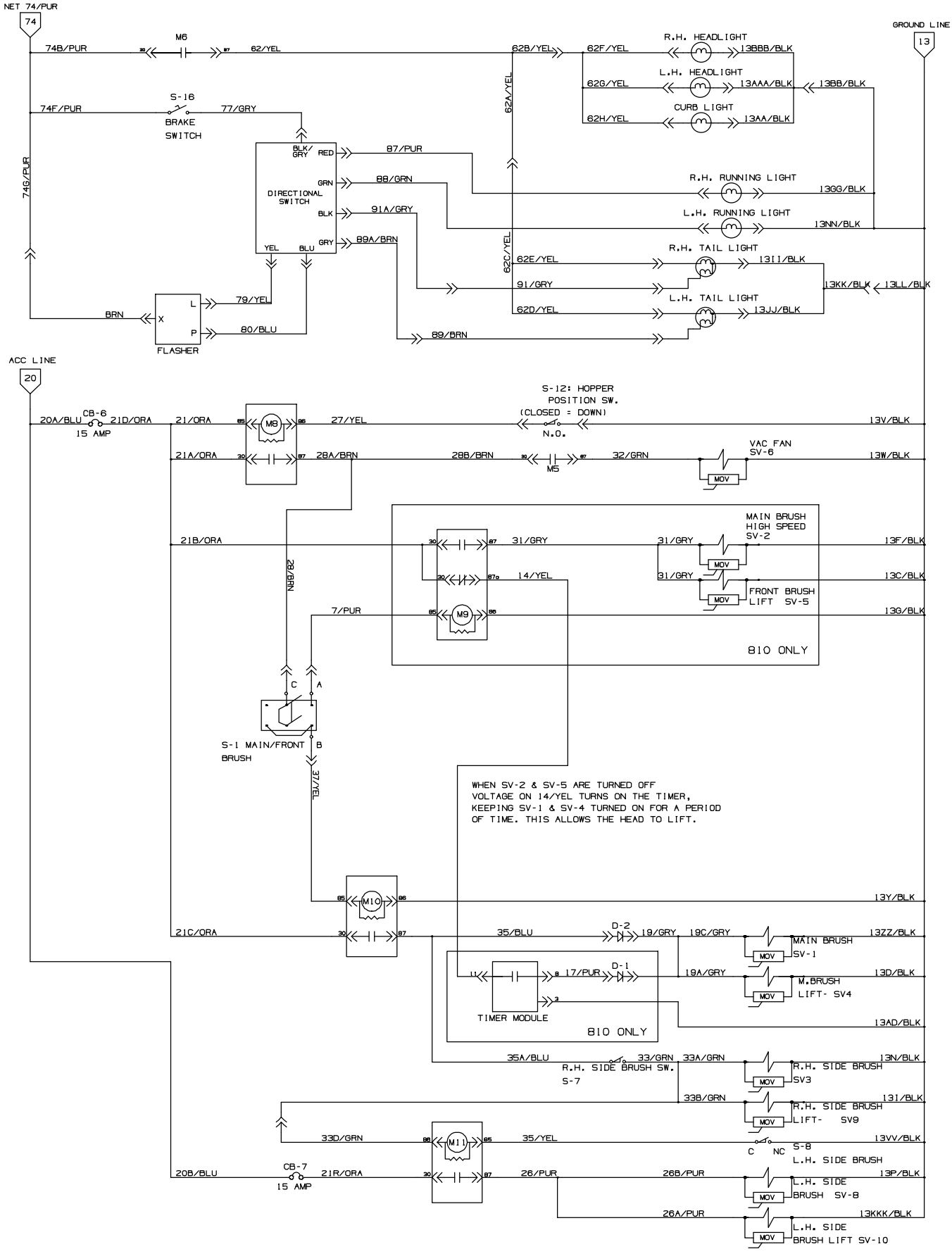

356723, 1075148 – G, LP

Fig. 54 – Electrical Schematic

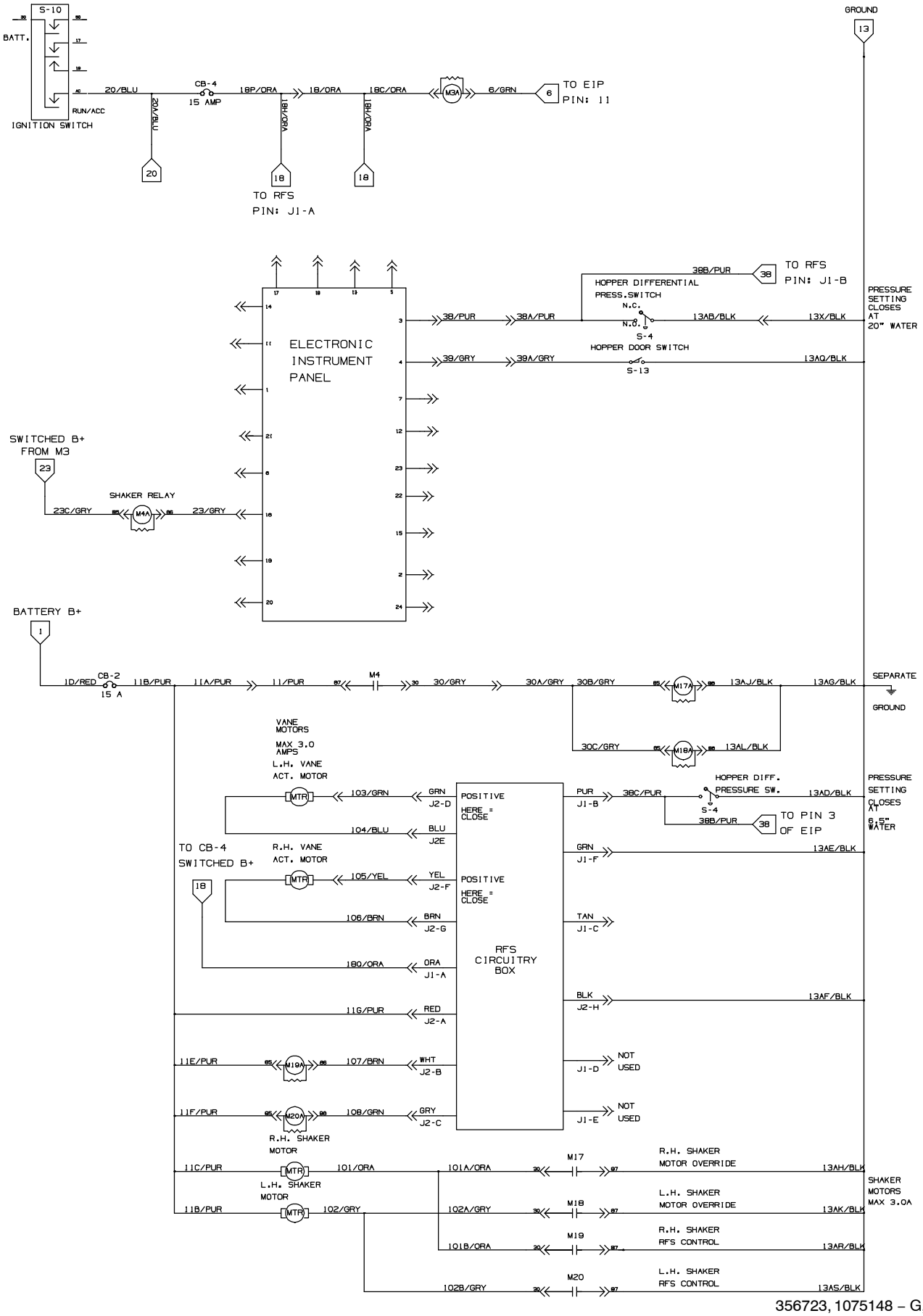

356723, 1075148 – G, LP

Fig. 55 – Wire Harness Group, Main

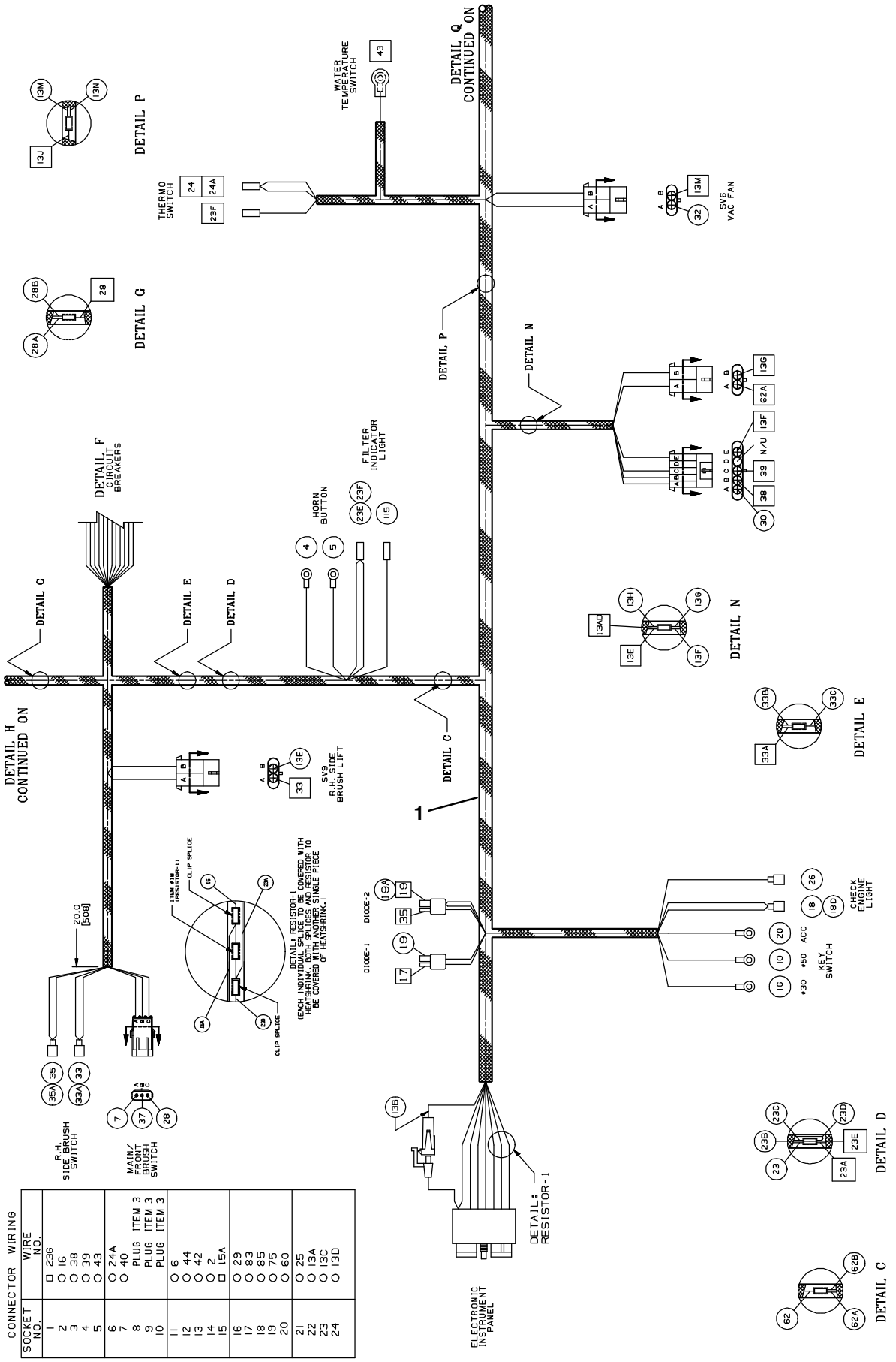

CONNECTOR	WIRE NO.
SOCKET NO.	
1	□ 23G
2	○ 16
3	○ 38
4	○ 39
5	○ 43
6	○ 24A
7	○ 40
8	PLUG ITEM 3
9	PLUG ITEM 3
10	PLUG ITEM 3
11	○ 6
12	○ 44
13	○ 42
14	○ 2
15	□ 15A
16	○ 29
17	○ 83
18	○ 85
19	○ 75
20	○ 60
21	○ 25
22	○ 13A
23	○ 13C
24	○ 13D

Fig. 55 – Wire Harness Group, Main

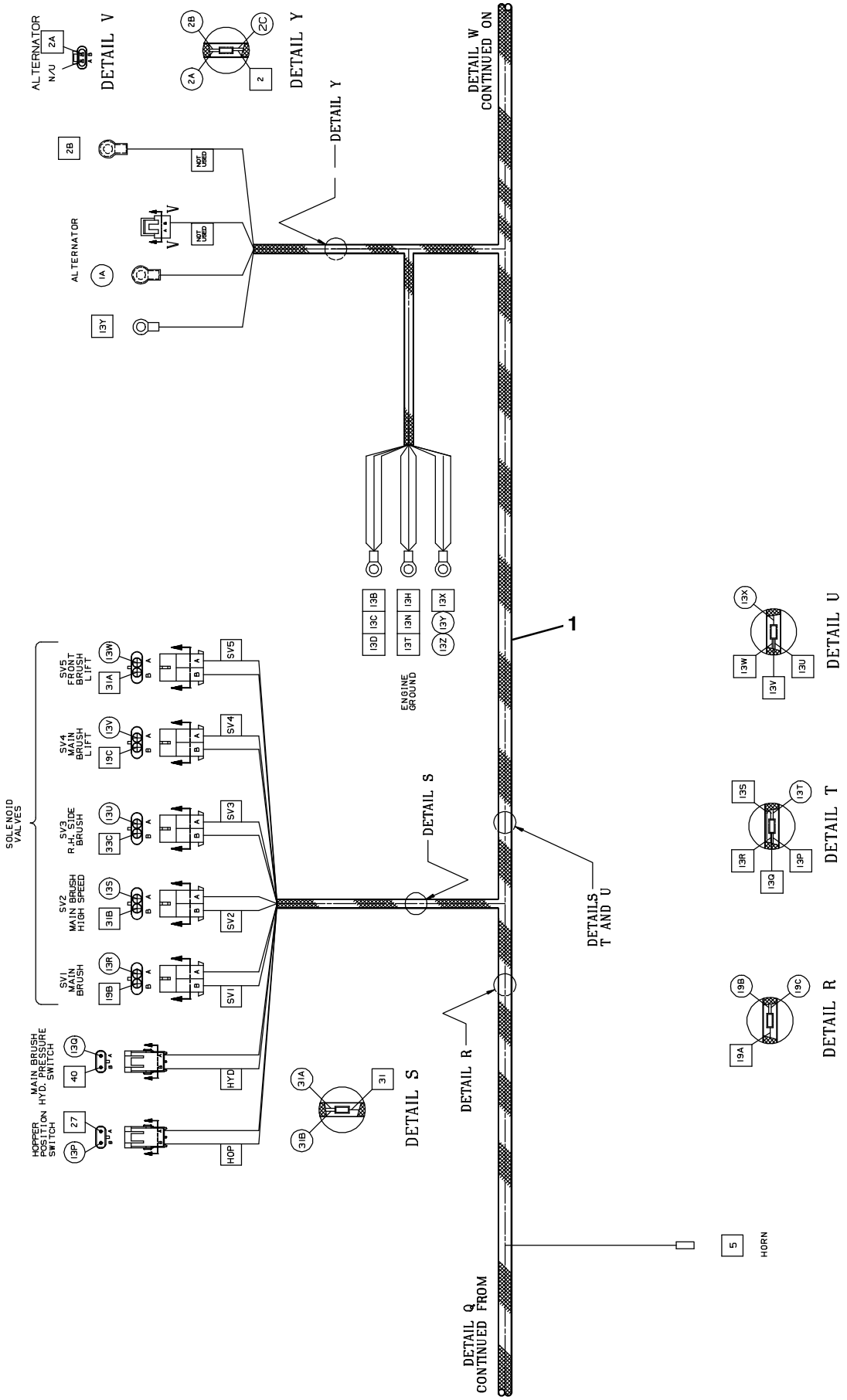

Fig. 55 – Wire Harness Group, Main

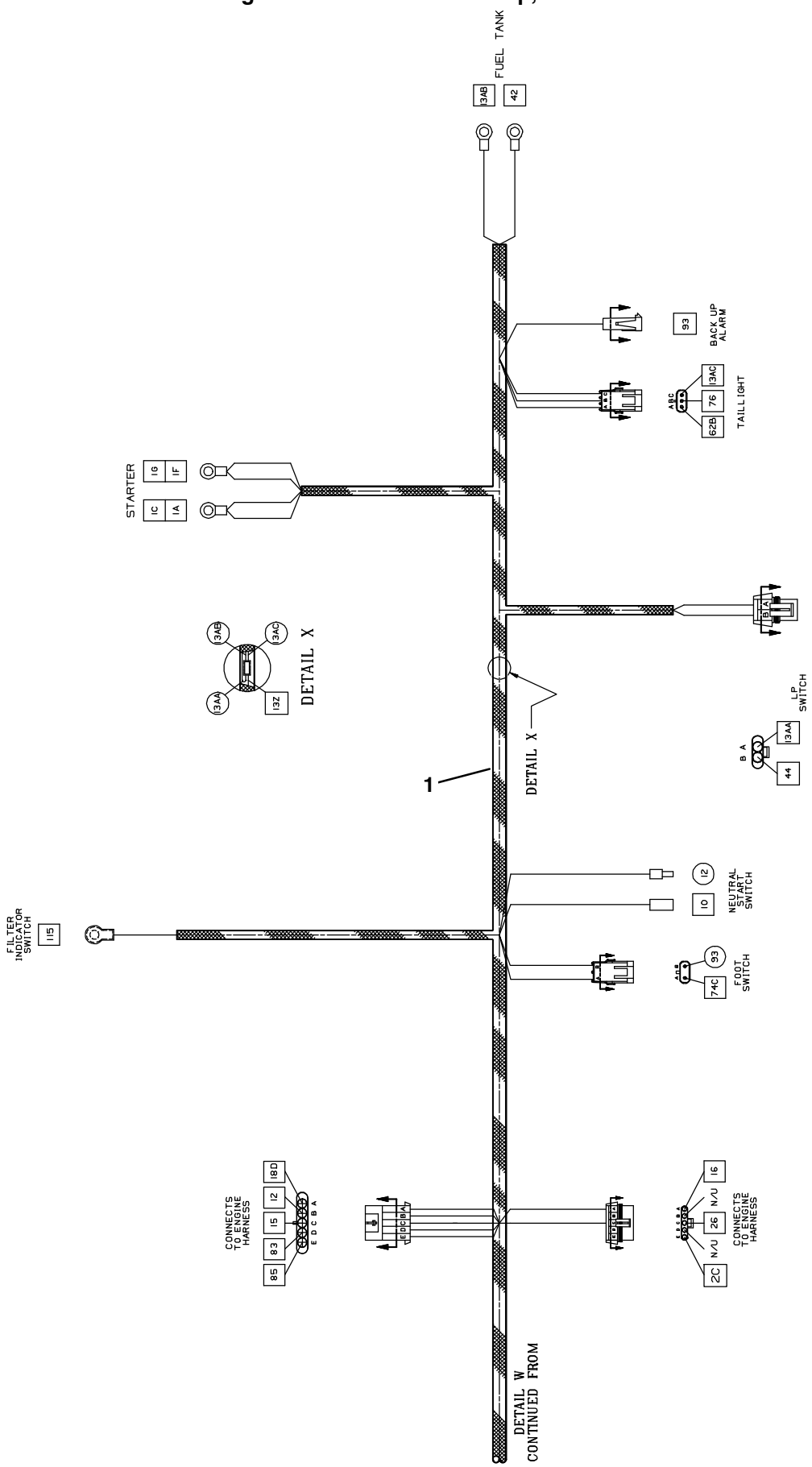

Fig. 55 – Wire Harness Group, Main

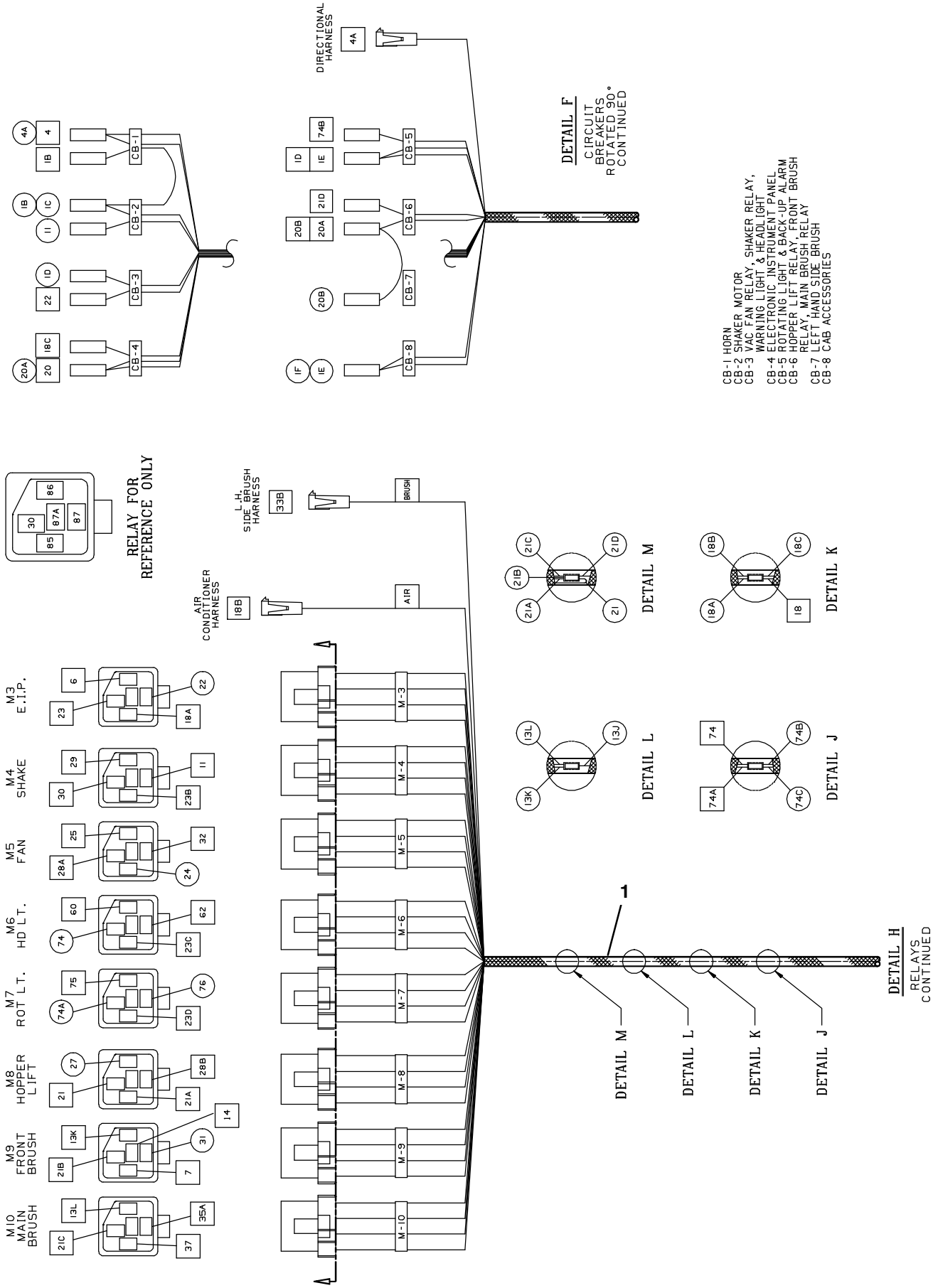

353876 – G, LP

Fig. 55 – Wire Harness Group, Main

Ref.	Part No.	Serial Number	Description	Qty.
1	392564	(008467–)	Harness, Main, Gas/LPG	1

Fig. 56 – Wire Harness Group, Gas Engine Harness

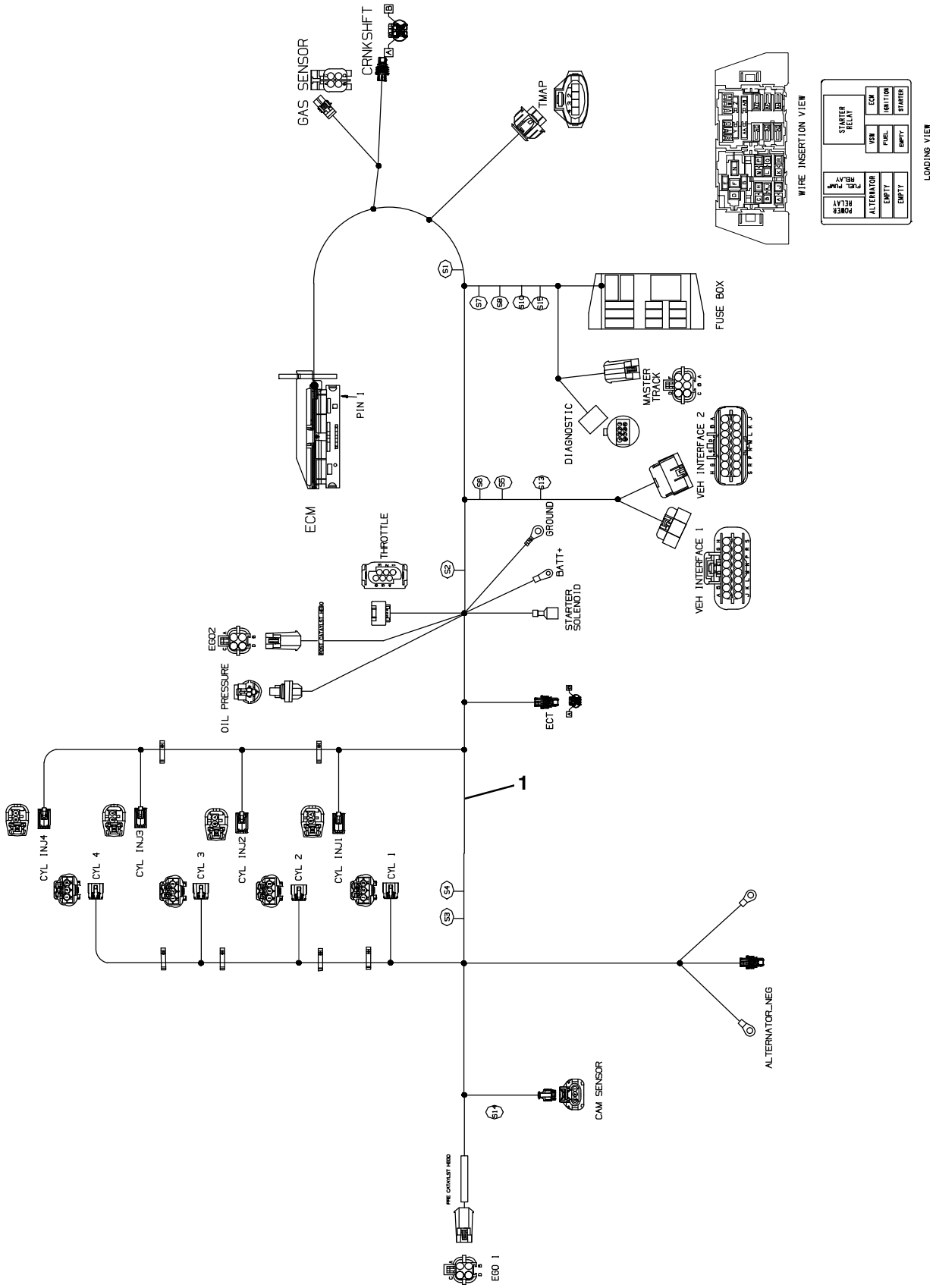

353876 – G

Ref.	Part No.	Serial Number	Description	Qty.
1	1075151	(008467–)	Harness, Eng [Mit, Gas, 2.4l, 2016]	1

Fig. 57 – Wire Harness Group, LPG Engine Harness

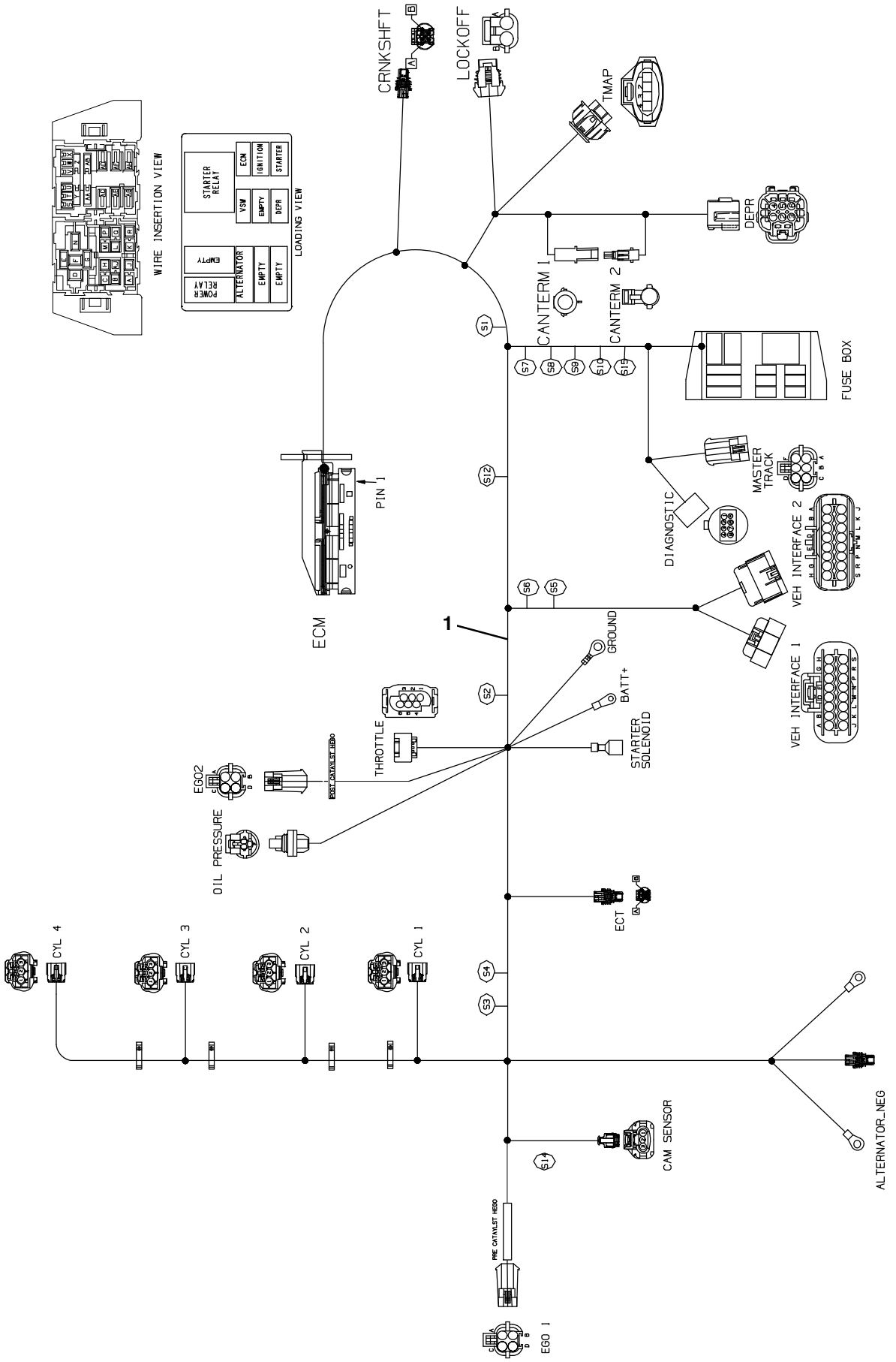

353876 – LP

Fig. 57 – Wire Harness Group, LPG Engine Harness

Ref.	Part No.	Serial Number	Description	Qty.
1	1075152	(008467–)	Harness, Eng [Mit, Lpg, 2.4l, 2016]	1

Fig. 58 – Wire Harness Group, Gas/LPG Engine Adapter Harness

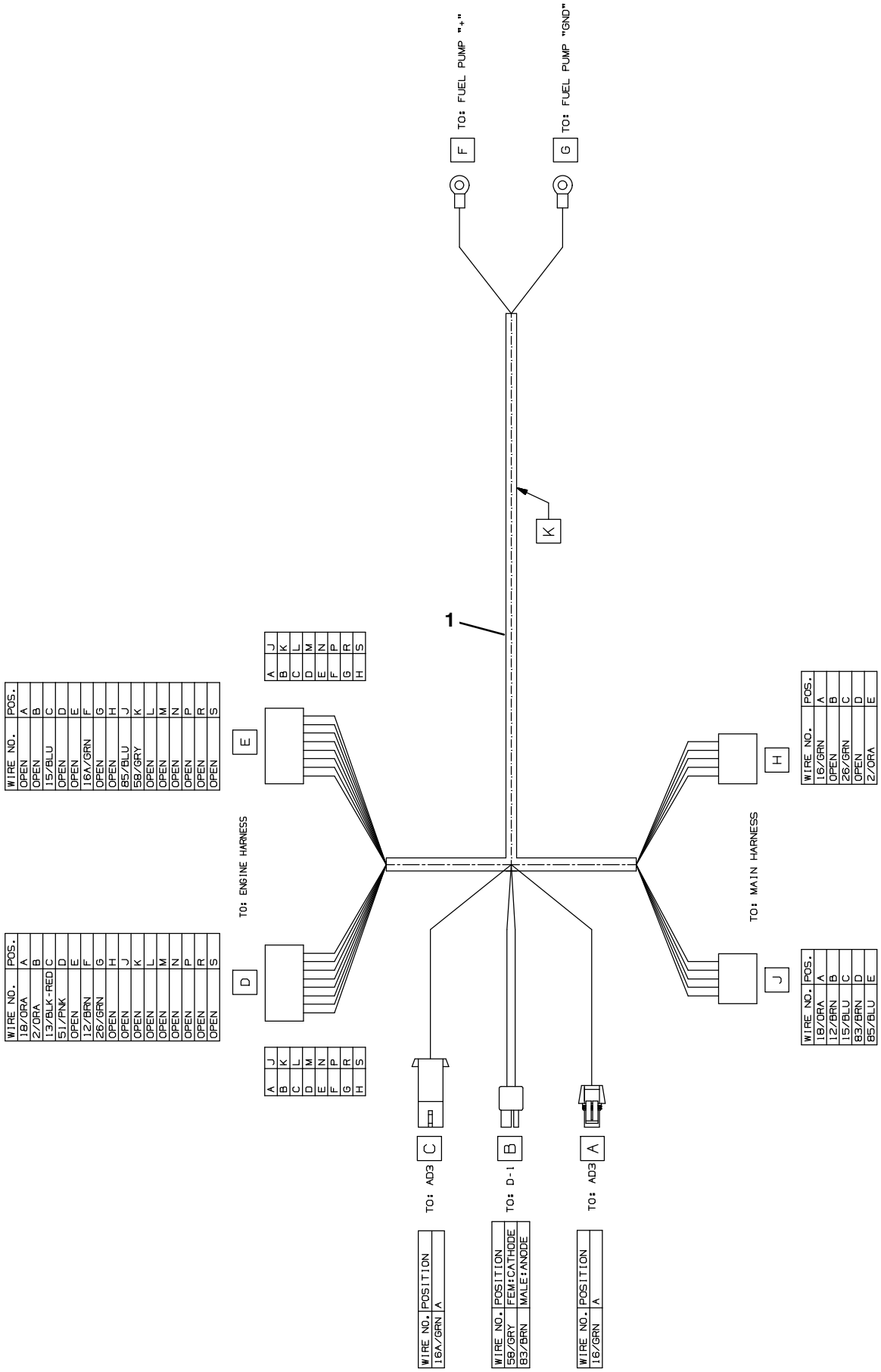

356817 – G/LP

Fig. 58 – Wire Harness Group, Gas/LPG Engine Adapter Harness

Ref.	Part No.	Serial Number	Description	Qty.
1	1032214	(008467–)	Harness, Adapter, Eng [800, G/Lp, 2015]	1

Fig. 59 – Electrical Schematic, Gas Engine Harness

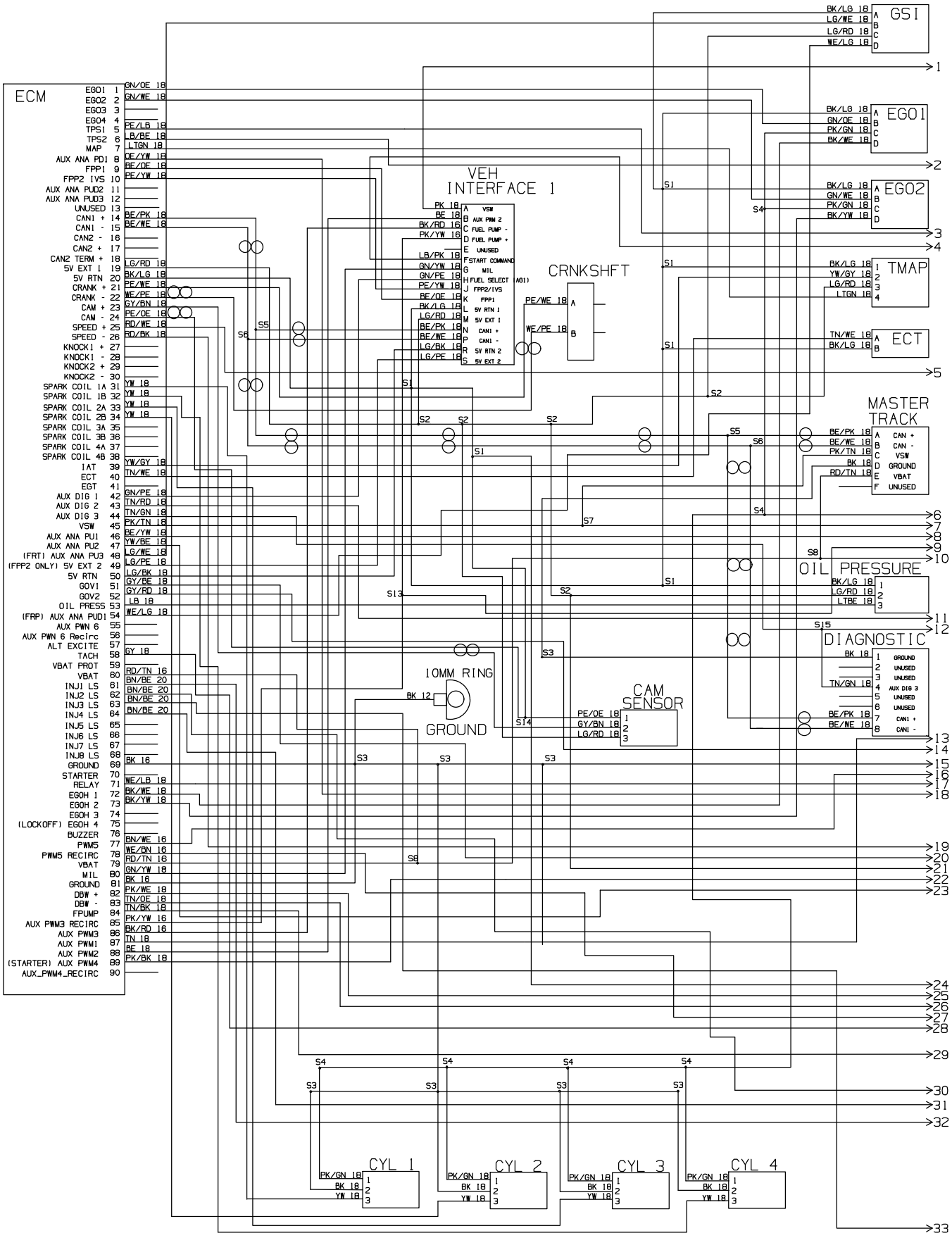

356741, 1075151 – G

Fig. 59 – Electrical Schematic, Gas Engine Harness

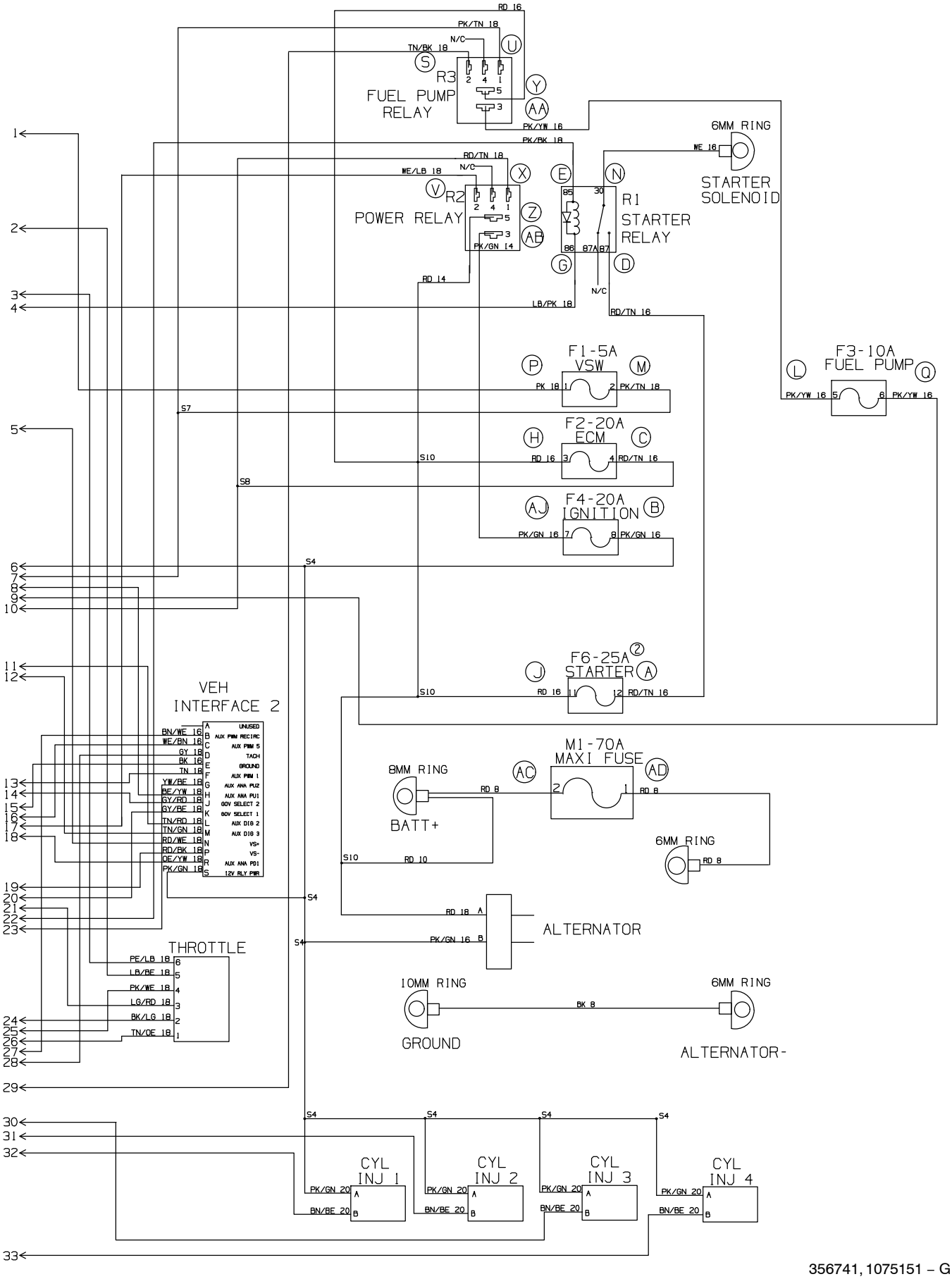

356741, 1075151 – G

Fig. 60 – Electrical Schematic, LPG Engine Harness

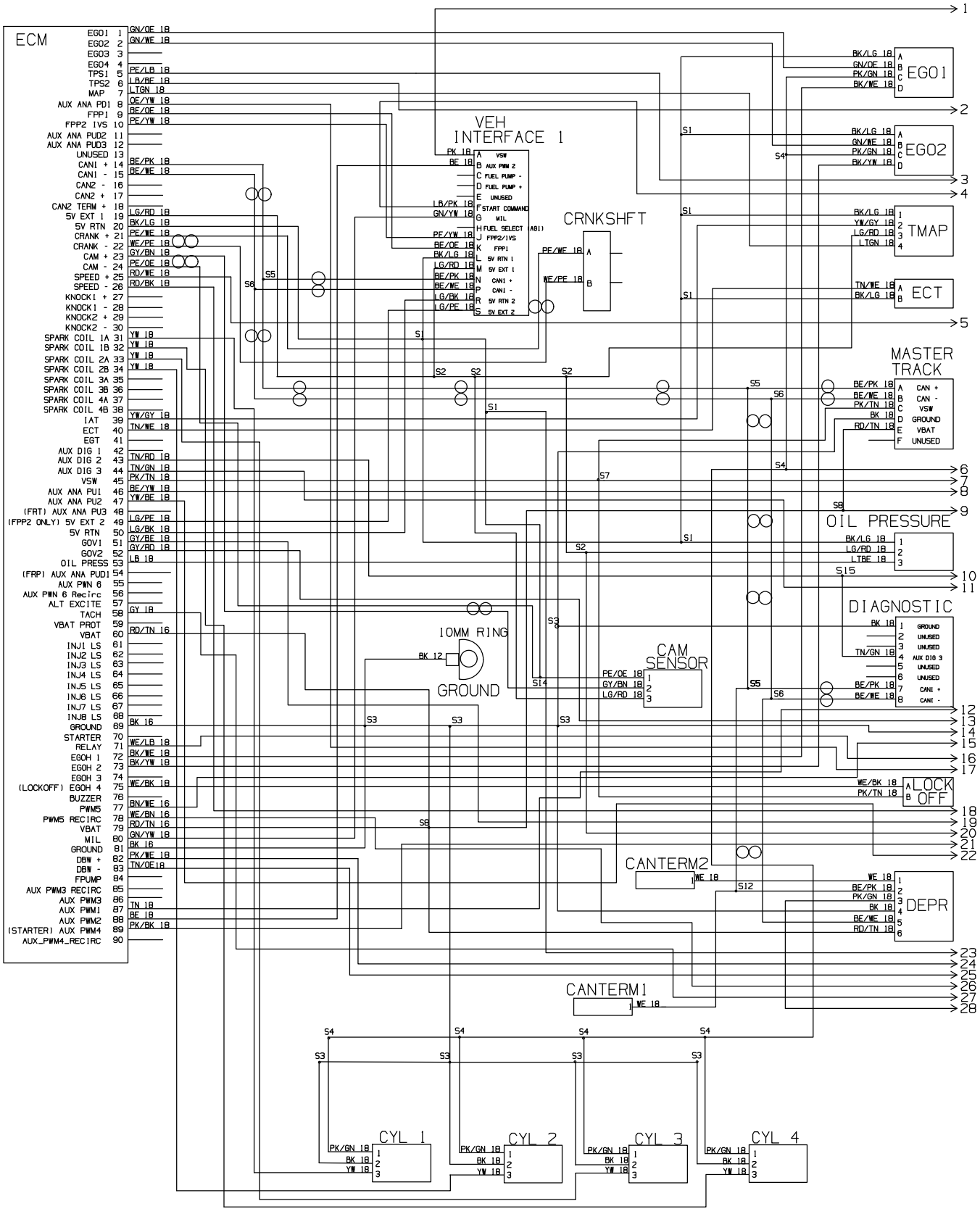

356742, 1075151 – LP

Fig. 60 – Electrical Schematic, LPG Engine Harness

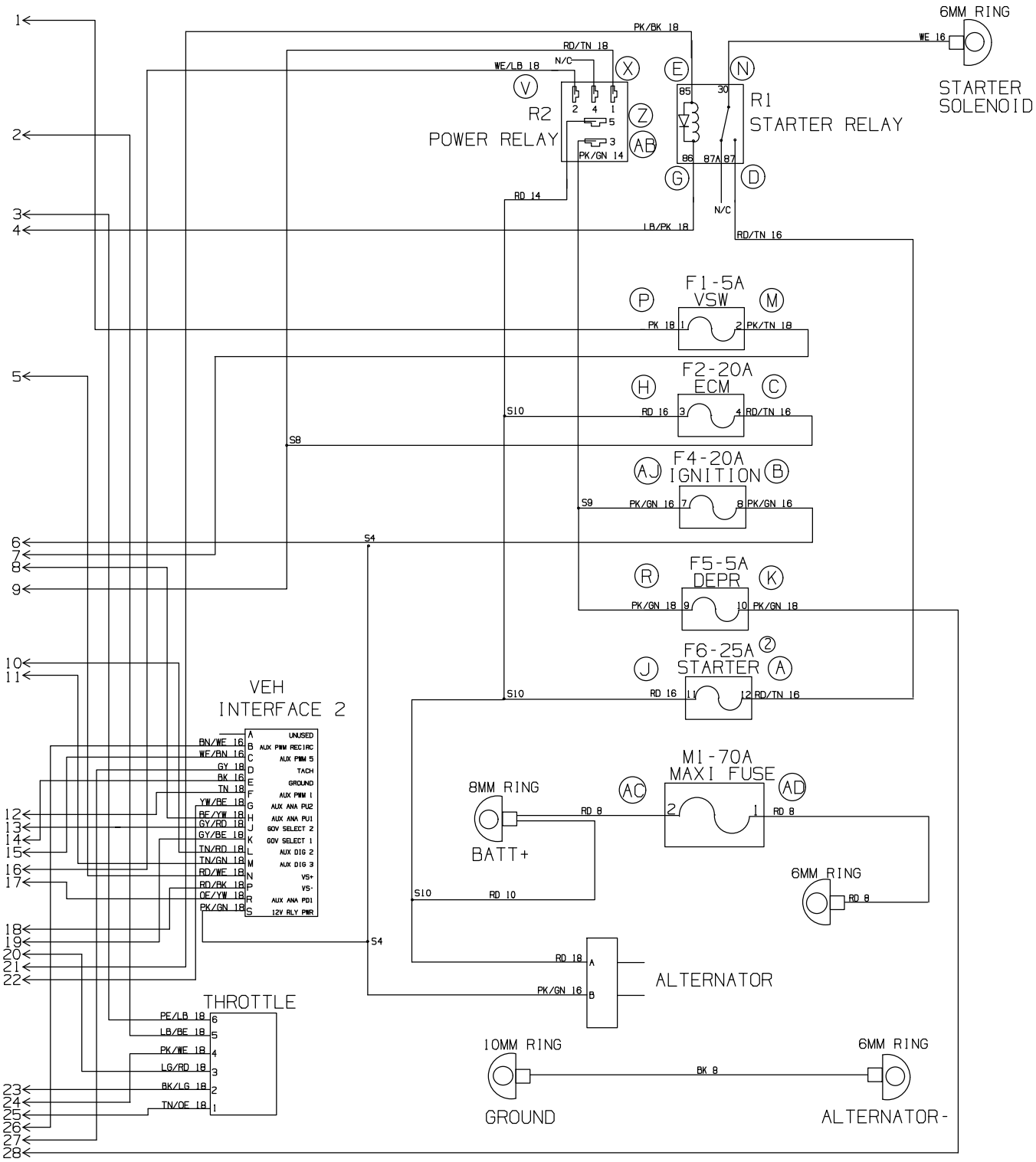

356742, 1075152 – LP

Fig. 61 – Wire Harness Group, Hopper

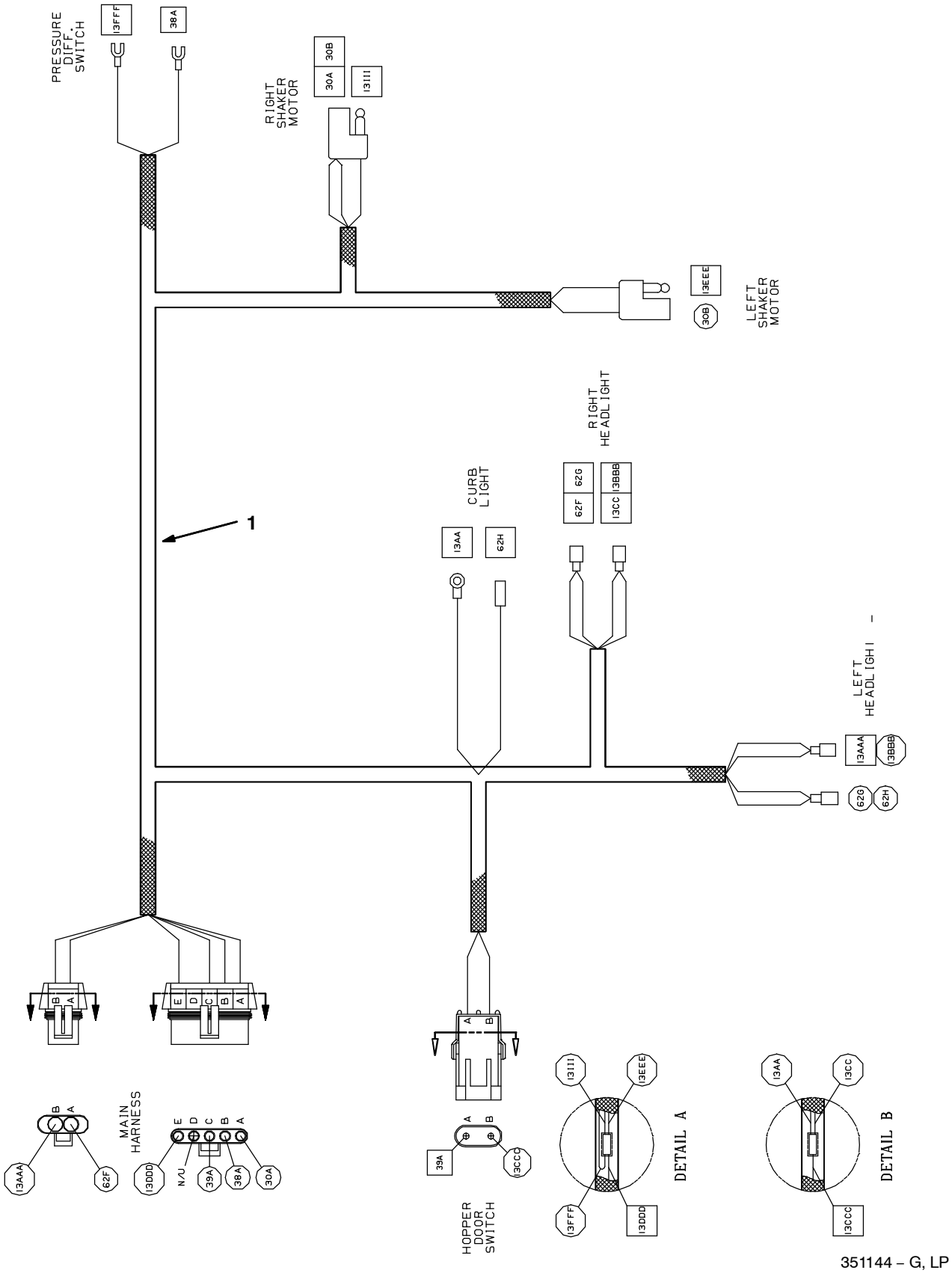

351144 – G, LP

Ref.	Part No.	Serial Number	Description	Qty.
1	83695	(008467–)	Harness, Hopper 800/810	1

Fig. 62 – Wire Harness Group, Tail Lights

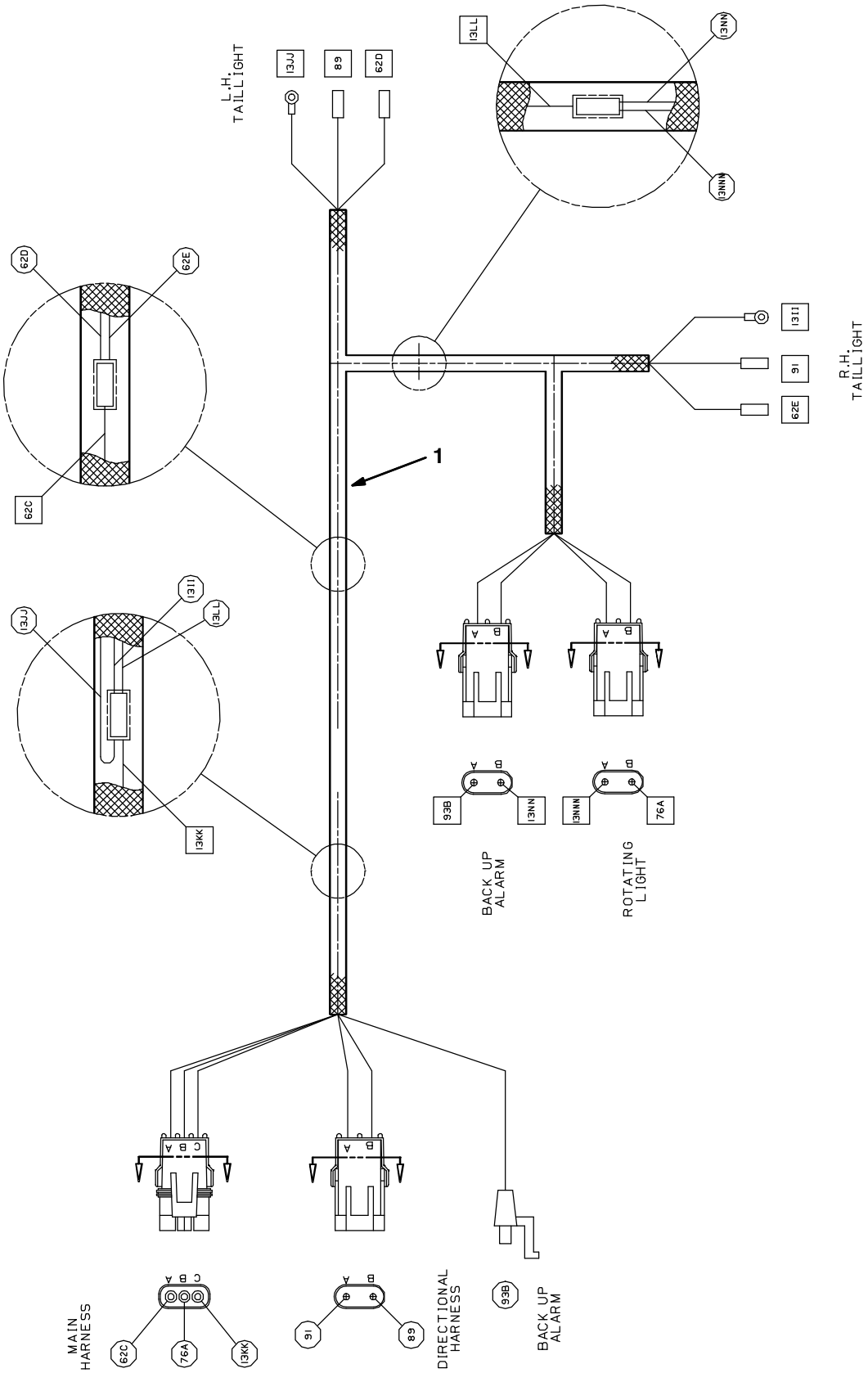

Fig. 62 – Wire Harness Group, Tail Lights

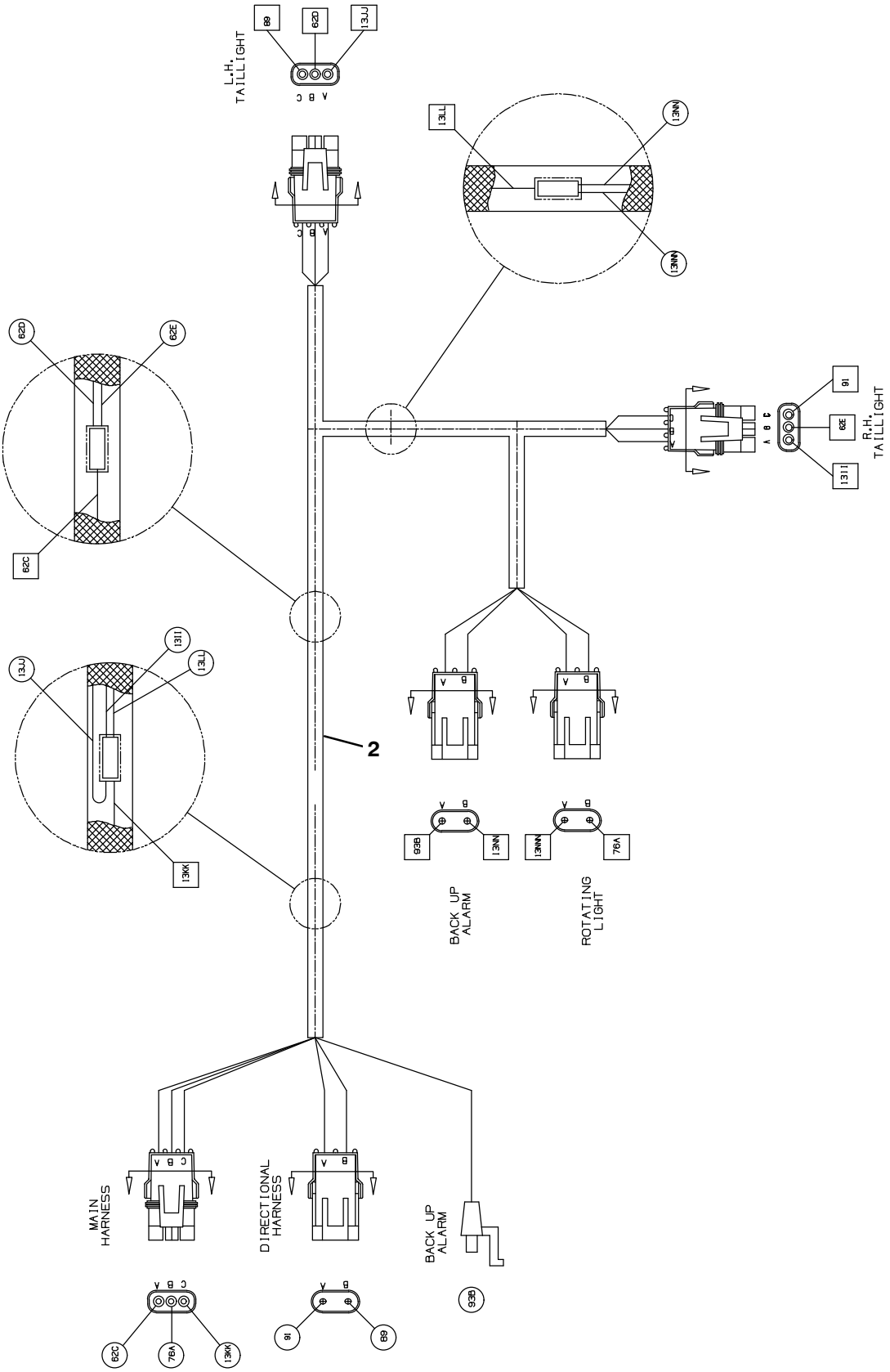

351145, 356936 – D

Ref.	Part No.	Serial Number	Description	Qty.
1	70400	(008467–008633)	Harness, Turn/Rotate/Tail Lights	1
2	1076508	(008634–)	Harness, Turn. Rotating, Tail Light	1

Fig. 63 – Label Group

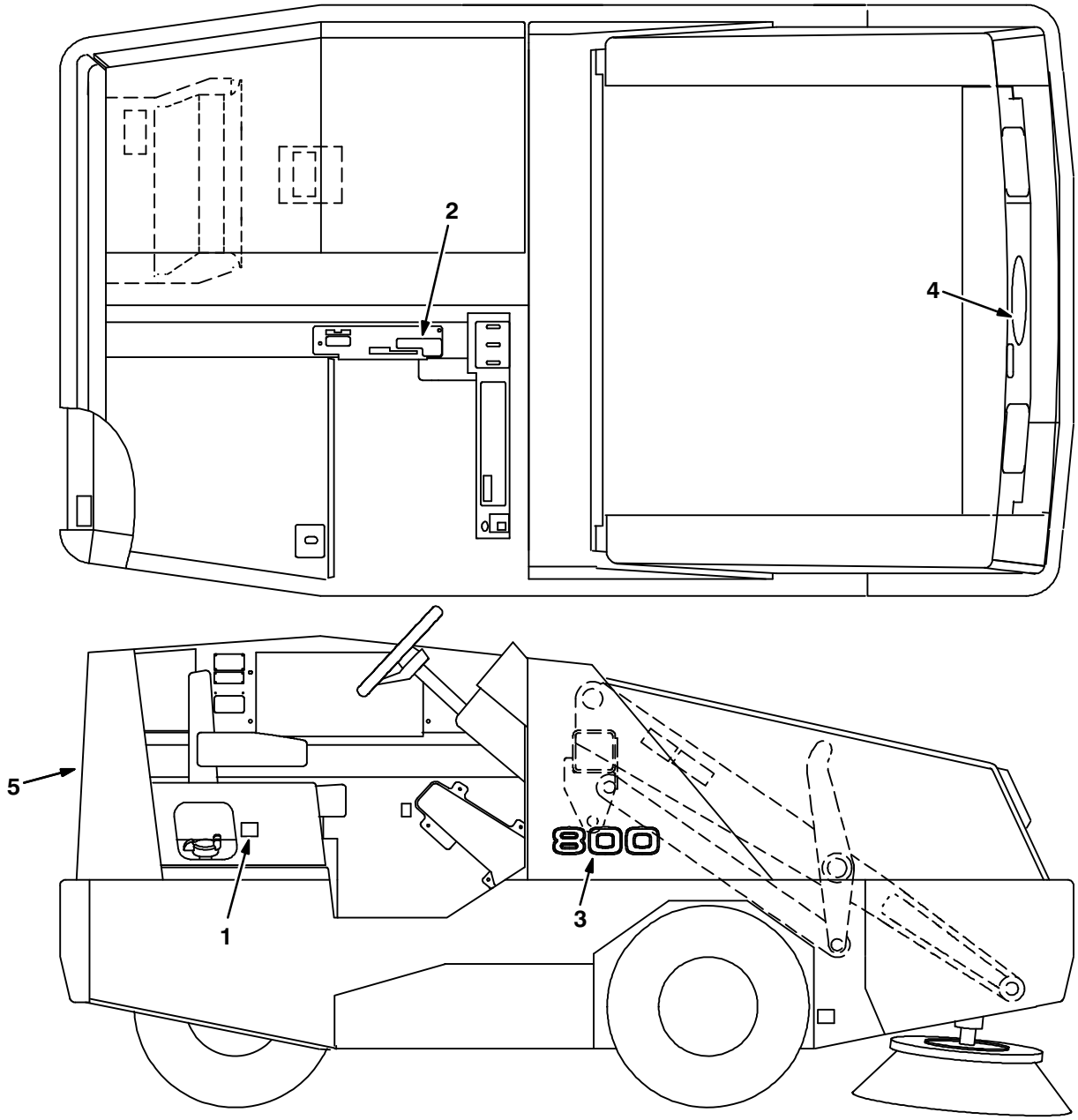

08774 – 800, NA

Ref.	Part No.	Serial Number	Description	Qty.
1	59767	(008467–)	Label Set, Info & Hazard	1
2	70705	(008467–)	Label Set, Operational 800	1
3	1074549	(008467–)	Label, Model [800 Gray]	2
4	1214251	(008467–)	Nameplate, Tennant, Domed, 10 Inch	1
5	86877	(008467–)	Label, Logo, 10.4L Sht/Clr [Tennant]	1

SECTION 3

Contents **Page**

Fig. 1 – Light Kit, Strobe, Overhead Guard 3-2
Fig. 2 – Light Kit, Flashing, Cab 3-4
Fig. 3 – Light Kit, Strobe, Overhead Guard 3-6
Fig. 4 – Light Kit, Strobe, Cab 3-8
Fig. 5 – Light Kit, Flashing, Low 3-10
Fig. 6 – Light Kit, Strobe, Low 3-12
Fig. 7 – Light Kit, Hopper Door 3-14
Fig. 8 – Back–Up Alarm Kit 3-15
Fig. 9 – Turn Signal Kit 3-16
Fig. 10 – Overhead Guard Kit 3-18
Fig. 11 – Hopper Floor Kit 3-20
Fig. 12 – Bumper Assembly, SE 3-21
Fig. 13 – Side Brush Lift Group, L.H. 3-22
Fig. 14 – Side Brush Hydraulic Solenoid Valve Group, L.H. 3-24
Fig. 15 – Side Brush Motor Group, L.H. 3-26
Fig. 16 – Side Brush Pivot Group, L.H. 3-28
Fig. 17 – Side Brush Wire Harness Group, L.H. 3-30
Fig. 18 – Side Brush Hydraulic Hose Group, L.H. 3-31
Fig. 19 – Side Brush Light Kit 3-32
Fig. 20 – Cab Kit 3-34
Fig. 21 – Cab Mirror Kit 3-36
Fig. 22 – Cab Seals Group 3-38
Fig. 23 – Cab AC and Heater Group 3-40
Fig. 24 – Cab AC Compressor Group 3-42
Fig. 25 – Cab AC and Heater Electrical Group .. 3-44
Fig. 26 – Cab Heater Group 3-46
Fig. 27 – Vacuum Wand Kit 3-48
Fig. 28 – Side Brush Dust Control Kit 3-50
Fig. 29 – Protectoseal Fuel Tank Cap Group ... 3-52
Fig. 30 – Fire Extinguisher Kit 3-53
Fig. 31 – Solid Tire and Rim Assembly 3-54
Fig. 32 – Seat Belt Kit 3-55
Fig. 33 – RFS Filter System Group 3-56
Fig. 34 – Cab AC Drain Hose Kit 3-58
Fig. 35 – Neutral Start Group 3-59
Fig. 36 – Spot Light Kit, Blue 3-60
Fig. 37 – Documentation Group (Online Only) .. 3-62

Fig. 1 – Light Kit, Flashing, Overhead Guard

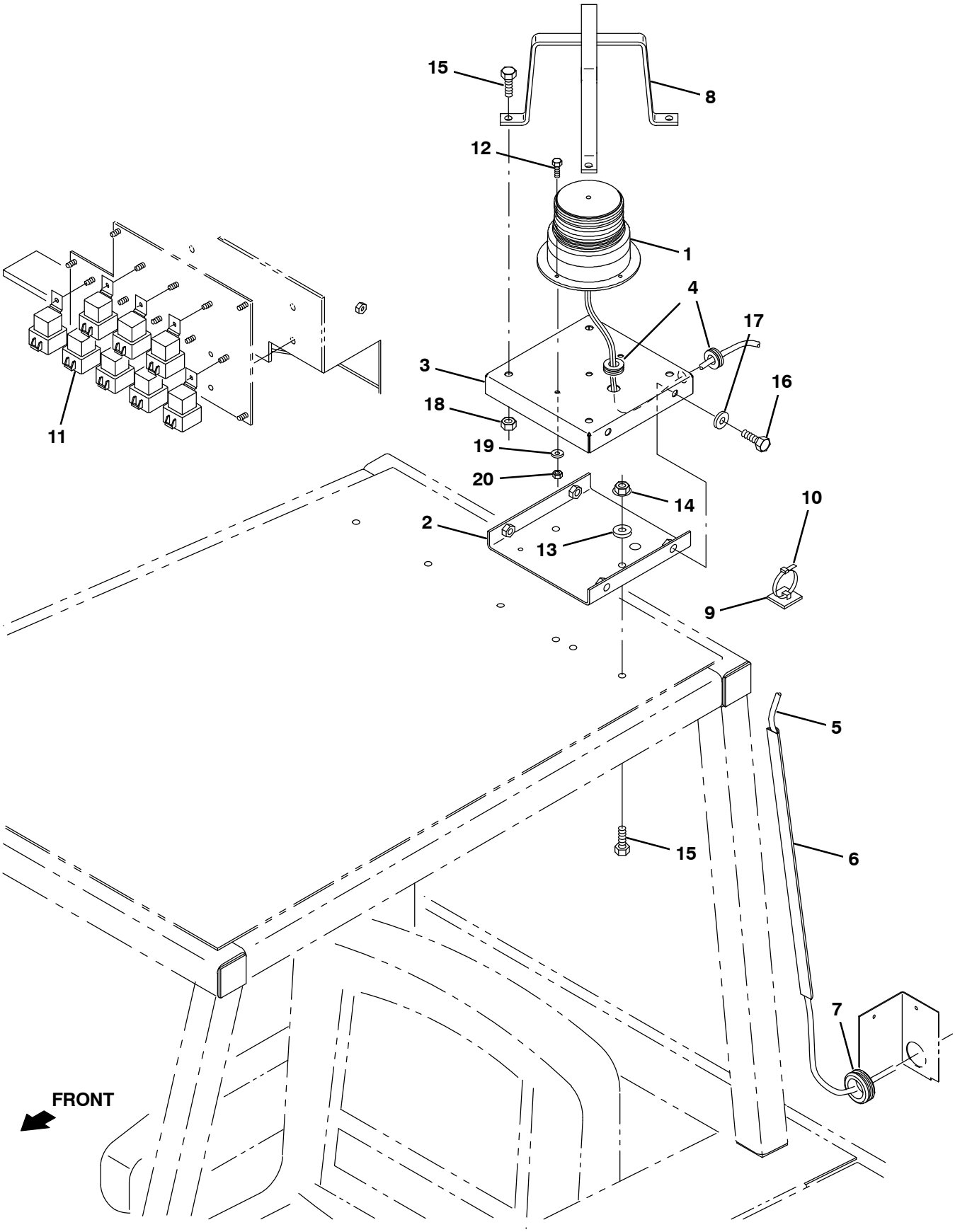

07654 – ALL

Fig. 1 – Light Kit, Flashing, Overhead Guard

	Ref.	Part No.	Serial Number	Description	Qty.
▽		9012886	(008467–)	Light Kit, Flsh, Ohg, Ci [800 Gray]	1
▲	1	1254294	(008467–)	Light, Strobe, Amb, Led	1
▲	2	1073909	(008467–)	Bracket, Mtg, Lower, Light, Revl/Flsh	1
▲	3	1073894	(008467–)	Bracket, Mtg, Light [800 Gray]	1
▲	4	10632–20	(008467–)	Grommet,Rbr,0.38Id,For .06Matl	2
▲	5	74000	(008467–)	Harness, Strobe/Flsh Light,Cab,Ohg	1
▲	6	1064050	(008467–)	Duct, Afmkt, Vyl, 0.40 X 0.75 .25d, 04ft	1
▲	7	10632–1	(008467–)	Grommet, Rbr, 1.06id, F/1.4h, .19 Matl	1
▲	8	1073934	(008467–)	Guard Wldt, Light, Revl/Flsh [800 Gray]	1
▲	9	55248	(008467–)	Cable Tie Mount	1
▲	10	49266	(008467–)	Tie, Cable	1
▲	11	56186	(008467–)	Relay, Shrouded, 12V	1
▲	12	09244	(008467–)	Screw, Hex, M5 X 0.80 X 16, 8.8	2
▲	13	32490	(008467–)	Washer, Flat, 0.25, Std	2
▲	14	07791	(008467–)	Nut, Hex, Flng, M8 X 1.25	2
▲	15	16931	(008467–)	Screw, Hex, M8 X 1.25 X 20, 8.8	6
▲	16	15675	(008467–)	Screw, Hex, M8 X 1.25 X 16, Ss	4
▲	17	39349	(008467–)	Washer, Flat, 0.31, Sae	4
▲	18	08709	(008467–)	Nut, Hex, Lock, M8 X 1.25, Nl	4
▲	19	19066	(008467–)	Washer, Flat, 0.25b 0.56d .05, Pl, 10	2
▲	20	06549	(008467–)	Nut, Hex, Lock, M5 X 0.80, Nl	2

Fig. 2 – Light Kit, Flashing, Cab

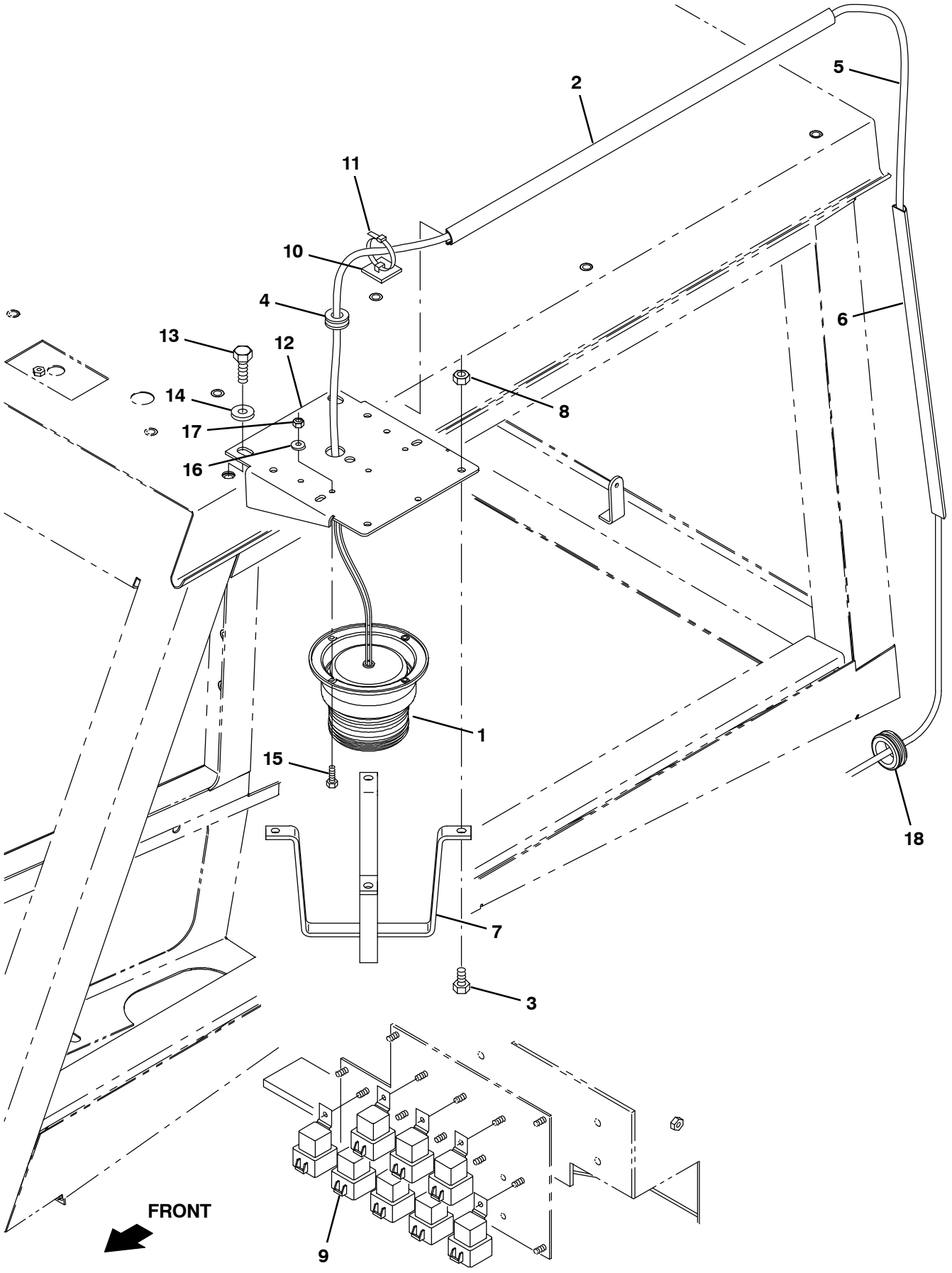

07658 – ALL

Fig. 2 – Light Kit, Flashing, Cab

	Ref.	Part No.	Serial Number	Description	Qty.
▽		9012855	(008467–)	Light Kit, Flsh, Cab, Ci [800 Gray]	1
▲	1	1254294	(008467–)	Light, Strobe, Amb, Led	1
▲	2	1064050	(008467–)	Duct, Afmkt, Vyl, 0.40 X 0.75 .25d, 04ft	1
▲	3	15675	(008467–)	Screw, Hex, M8 X 1.25 X 16, Ss	4
▲	4	10632–20	(008467–)	Grommet,Rbr,0.38Id,For .06Matl	1
▲	5	74000	(008467–)	Harness, Strobe/Flsh Light,Cab,Ohg	1
▲	6	1064050	(008467–)	Duct, Afmkt, Vyl, 0.40 X 0.75 .25d, 04ft	1
▲	7	1073934	(008467–)	Guard Wldt, Light, Revl/Flsh [800 Gray]	1
▲	8	08709	(008467–)	Nut, Hex, Lock, M8 X 1.25, Nl	4
▲	9	56186	(008467–)	Relay, Shrouded, 12V	1
▲	10	55248	(008467–)	Cable Tie Mount	1
▲	11	49266	(008467–)	Tie, Cable	1
▲	12	1073933	(008467–)	Bracket, Mtg, Light, Rotating [800 Gray]	1
▲	13	09028	(008467–)	Screw, Hex, M10 X 1.50 X 25, Ss	2
▲	14	32492	(008467–)	Washer, Flat, 0.38, Std	2
▲	15	09244	(008467–)	Screw, Hex, M5 X 0.80 X 16, 8.8	2
▲	16	19066	(008467–)	Washer, Flat, 0.25b 0.56d .05, Pl, 10	2
▲	17	06549	(008467–)	Nut, Hex, Lock, M5 X 0.80, Nl	2
▲	18	10632–1	(008467–)	Grommet, Rbr, 1.06id, F/1.4h, .19 Matl	1

Fig. 3 – Light Kit, Strobe, Overhead Guard

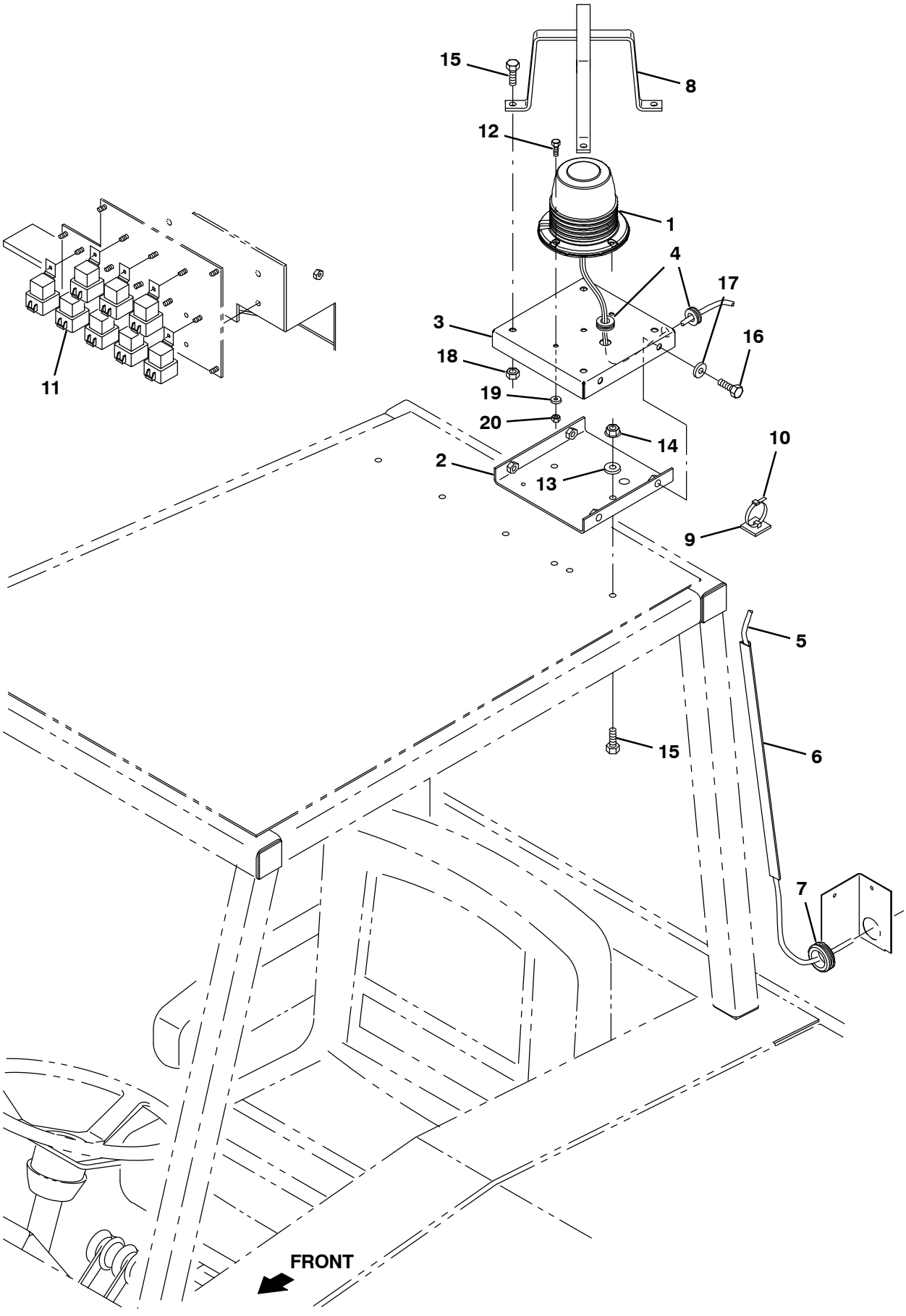

07654/07656 – ALL

Fig. 3 – Light Kit, Strobe, Overhead Guard

	Ref.	Part No.	Serial Number	Description	Qty.
▽		9012885	(008467–)	Light Kit, Strobe, Ohg, Ci [800l Gray]	1
▲	1	1254294	(008467–)	Light, Strobe, Amb, Led	1
▲	2	1073909	(008467–)	Bracket, Mtg, Lower, Light, Revl/Flsh	1
▲	3	1073894	(008467–)	Bracket, Mtg, Light [800 Gray]	1
▲	4	10632–20	(008467–)	Grommet,Rbr,0.38Id,For .06Matl	2
▲	5	74000	(008467–)	Harness, Strobe/Flsh Light,Cab,Ohg	1
▲	6	1064050	(008467–)	Duct, Afmkt, Vyl, 0.40 X 0.75 .25d, 04ft	1
▲	7	10632–1	(008467–)	Grommet, Rbr, 1.06id, F/1.4h, .19 Matl	1
▲	8	1073934	(008467–)	Guard Wldt, Light, Revl/Flsh [800 Gray]	1
▲	9	55248	(008467–)	Cable Tie Mount	1
▲	10	49266	(008467–)	Tie, Cable	1
▲	11	56186	(008467–)	Relay, Shrouded, 12V	1
▲	12	09244	(008467–)	Screw, Hex, M5 X 0.80 X 16, 8.8	2
▲	13	32490	(008467–)	Washer, Flat, 0.25, Std	2
▲	14	07791	(008467–)	Nut, Hex, Flng, M8 X 1.25	2
▲	15	16931	(008467–)	Screw, Hex, M8 X 1.25 X 20, 8.8	6
▲	16	15675	(008467–)	Screw, Hex, M8 X 1.25 X 16, Ss	4
▲	17	39349	(008467–)	Washer, Flat, 0.31, Sae	4
▲	18	08709	(008467–)	Nut, Hex, Lock, M8 X 1.25, Nl	4
▲	19	19066	(008467–)	Washer, Flat, 0.25b 0.56d .05, Pl, 10	2
▲	20	06549	(008467–)	Nut, Hex, Lock, M5 X 0.80, Nl	2

Fig. 4 – Light Kit, Strobe, Cab

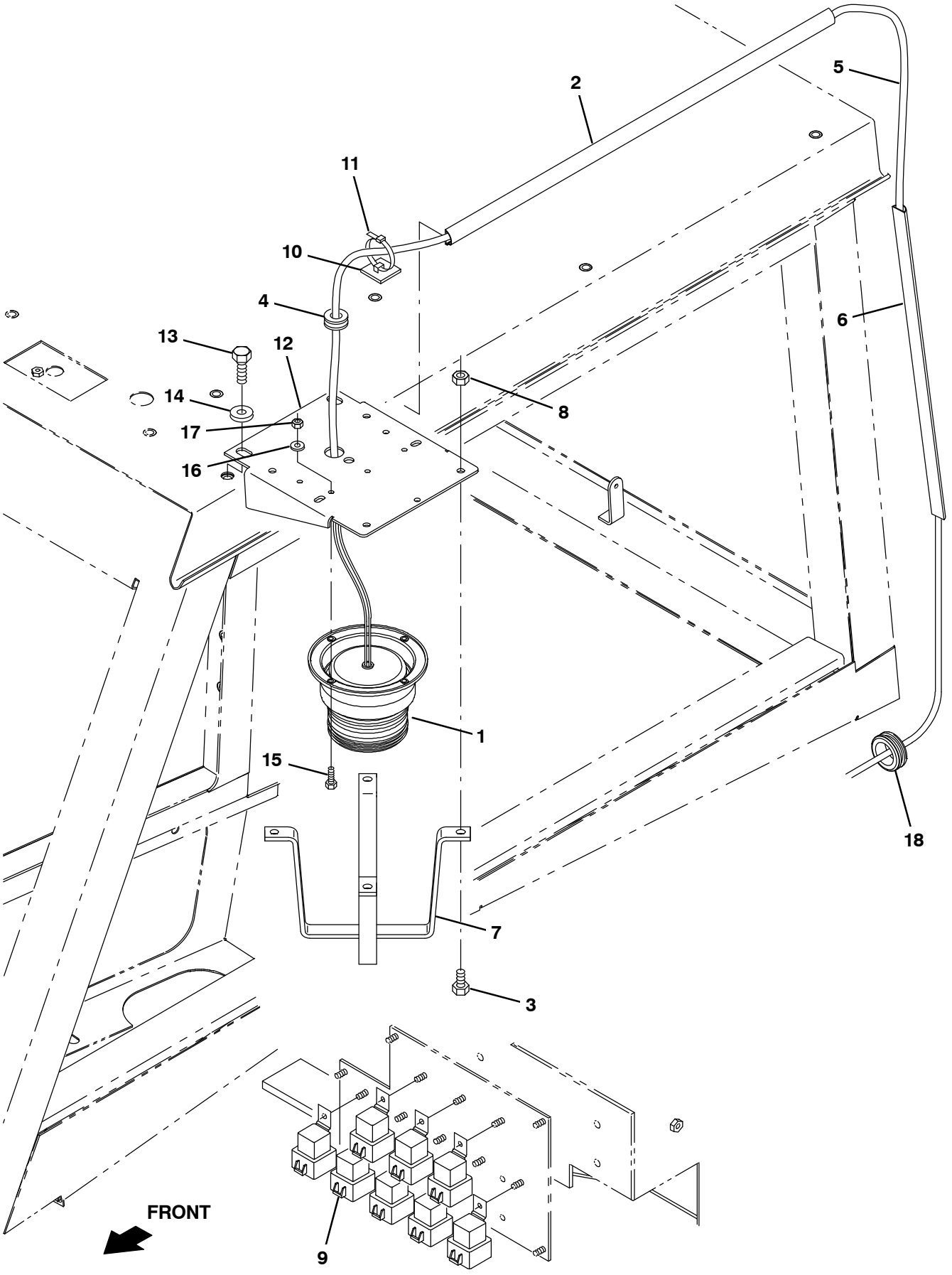

07658/07660 – ALL

Fig. 4 – Light Kit, Strobe, Cab

	Ref.	Part No.	Serial Number	Description	Qty.
▽		9012856	(008467–)	Light Kit, Revl, Cab, Ci [800l Gray]	1
▲	1	1254294	(008467–)	Light, Strobe, Amb, Led	1
▲	2	1064050	(008467–)	Duct, Afmkt, Vyl, 0.40 X 0.75 .25d, 04ft	1
▲	3	15675	(008467–)	Screw, Hex, M8 X 1.25 X 16, Ss	4
▲	4	10632–20	(008467–)	Grommet,Rbr,0.38Id,For .06Matl	1
▲	5	74000	(008467–)	Harness, Strobe/Flsh Light,Cab,Ohg	1
▲	6	1064050	(008467–)	Duct, Afmkt, Vyl, 0.40 X 0.75 .25d, 04ft	1
▲	7	1073934	(008467–)	Guard Wldt, Light, Revl/Flsh [800 Gray]	1
▲	8	08709	(008467–)	Nut, Hex, Lock, M8 X 1.25, Nl	4
▲	9	56186	(008467–)	Relay, Shrouded, 12V	1
▲	10	55248	(008467–)	Cable Tie Mount	1
▲	11	49266	(008467–)	Tie, Cable	1
▲	12	1073933	(008467–)	Bracket, Mtg, Light, Rotating [800 Gray]	1
▲	13	09028	(008467–)	Screw, Hex, M10 X 1.50 X 25, Ss	2
▲	14	32492	(008467–)	Washer, Flat, 0.38, Std	2
▲	15	09244	(008467–)	Screw, Hex, M5 X 0.80 X 16, 8.8	2
▲	16	19066	(008467–)	Washer, Flat, 0.25b 0.56d .05, Pl, 10	2
▲	17	06549	(008467–)	Nut, Hex, Lock, M5 X 0.80, Nl	2
▲	18	10632–1	(008467–)	Grommet, Rbr, 1.06id, F/1.4h, .19 Matl	1

Fig. 5 – Light Kit, Flashing, Low

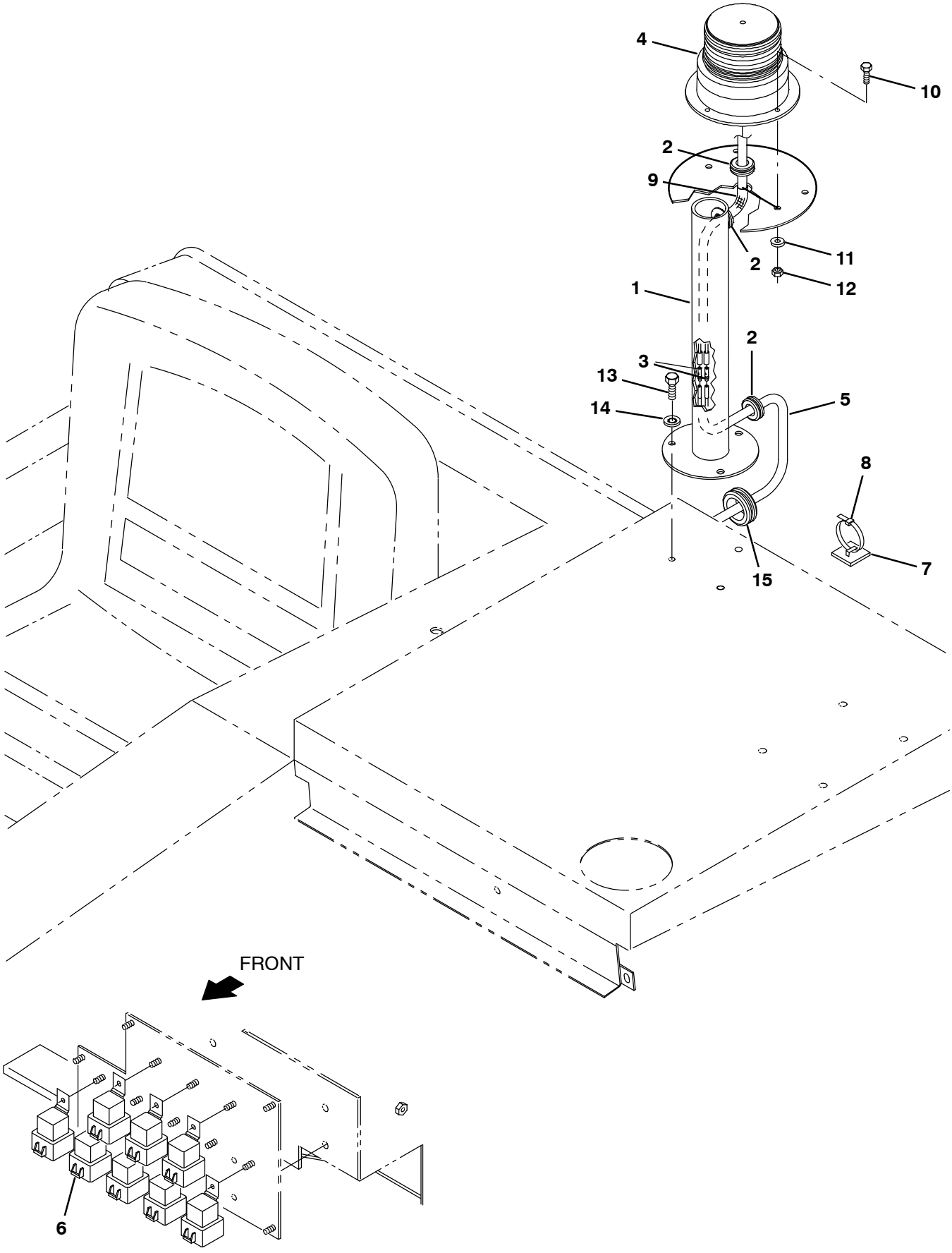

351133 – ALL

Fig. 5 – Light Kit, Flashing, Low

	Ref.	Part No.	Serial Number	Description	Qty.
▽		9012853	(008467–)	Light Kit, Flsh, Ped, Ci [800 Gray]	1
▲	1	1073876	(008467–)	Pedestal Wldt, Light [800 Gray]	1
▲	2	10632–9	(008467–)	Grommet, Rbr, 0.56 Id For .13mat	3
▲	3	383820	(008467–)	Terminal, Bullet, Mal, .156d 22–18ga	2
▲	4	1254294	(008467–)	Light, Strobe, Amb, Led	1
▲	5	380691	(008467–)	Harness, Light And Backup Alarm [800l]	1
▲	6	56186	(008467–)	Relay 12Vdc 40A Spdt	1
▲	7	55248	(008467–)	Cabletie Mount, Adhesive	2
▲	8	49266	(008467–)	Tie, Cable 1.75D Max 7.50Lg	2
▲	9	1063998	(008467–)	Sleeve, Afmkt, Vyl, 0.325id, 01ft	1
▲	10	09244	(008467–)	Screw, Hex, M5 X 0.80 X 16, 8.8	2
▲	11	19066	(008467–)	Washer, Flat, 0.25b 0.56d .05, Pl, 10	2
▲	12	06549	(008467–)	Nut, Hex, Lock, M5 X 0.80, Nl	2
▲	13	06943	(008467–)	Screw, Hex, M6 X 1.00 X 20, 8.8	3
▲	14	32982	(008467–)	Washer, Lock, Int, 0.25	3
▲	15	10632–1	(008467–)	Grommet, Rbr, 1.06id, F/1.4h, .19 Matl	1

Fig. 6 – Light Kit, Strobe, Low

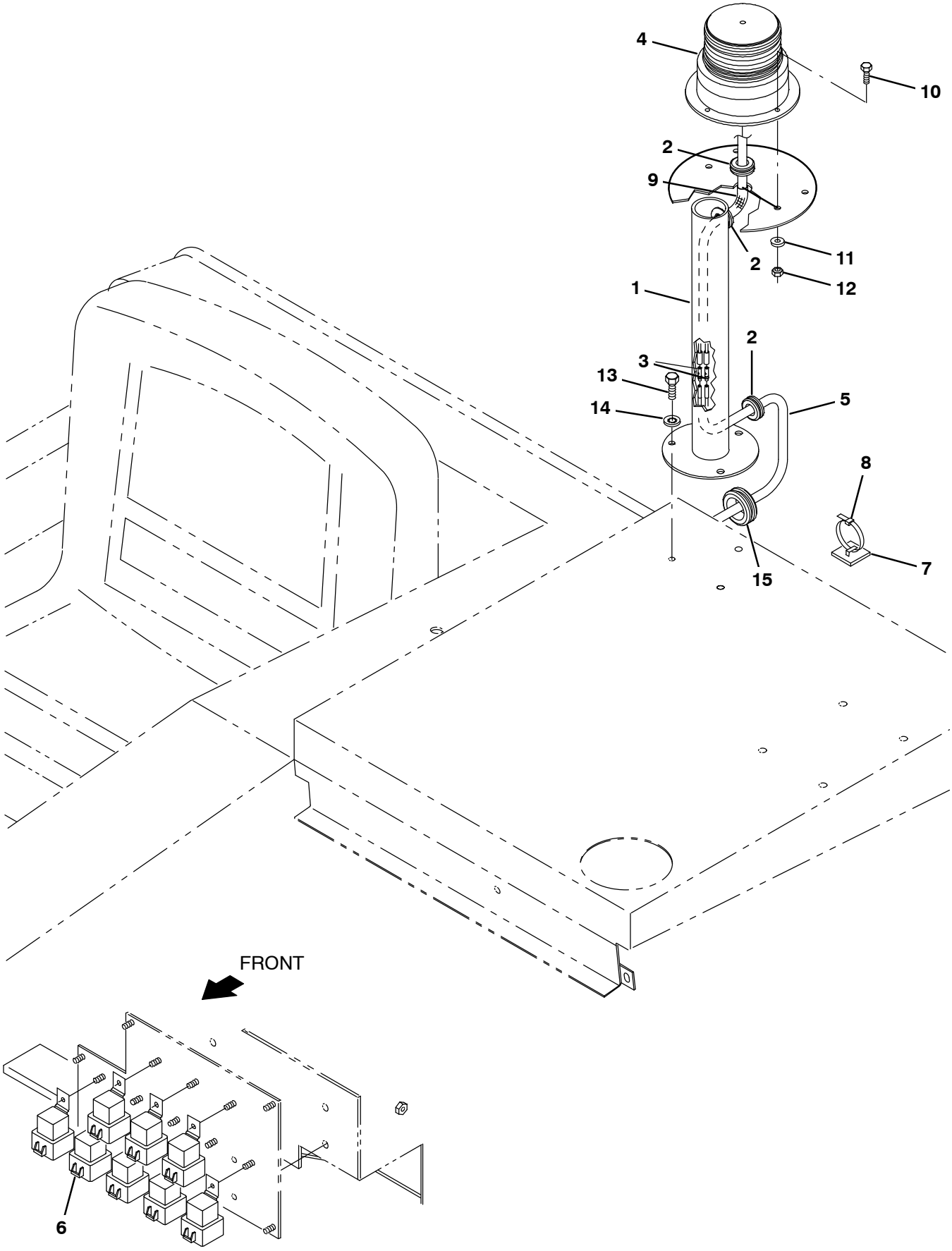

351133/351135 – ALL

Fig. 6 – Light Kit, Strobe, Low

	Ref.	Part No.	Serial Number	Description	Qty.
▽		9012854	(008467–)	Light Kit, Strobe, Ped, Ci [800l Gray]	1
▲	1	1073876	(008467–)	Pedestal Wldt, Light [800 Gray]	1
▲	2	10632–9	(008467–)	Grommet, Rbr, 0.56 Id For .13mat	3
▲	3	383820	(008467–)	Terminal, Bullet, Mal, .156d 22–18ga	2
▲	4	1254294	(008467–)	Light, Strobe, Amb, Led	1
▲	5	380691	(008467–)	Harness, Light And Backup Alarm [800l]	1
▲	6	56186	(008467–)	Relay 12Vdc 40A Spdt	1
▲	7	55248	(008467–)	Cabletie Mount, Adhesive	2
▲	8	49266	(008467–)	Tie, Cable 1.75D Max 7.50Lg	2
▲	9	1063998	(008467–)	Sleeve, Afmkt, Vyl, 0.325id, 01ft	1
▲	10	09244	(008467–)	Screw, Hex, M5 X 0.80 X 16, 8.8	2
▲	11	19066	(008467–)	Washer, Flat, 0.25b 0.56d .05, Pl, 10	2
▲	12	06549	(008467–)	Nut, Hex, Lock, M5 X 0.80, Nl	2
▲	13	06943	(008467–)	Screw, Hex, M6 X 1.00 X 20, 8.8	3
▲	14	32982	(008467–)	Washer, Lock, Int, 0.25	3
▲	15	10632–1	(008467–)	Grommet, Rbr, 1.06id, F/1.4h, .19 Matl	1

Fig. 7 – Light Kit, Hopper Door

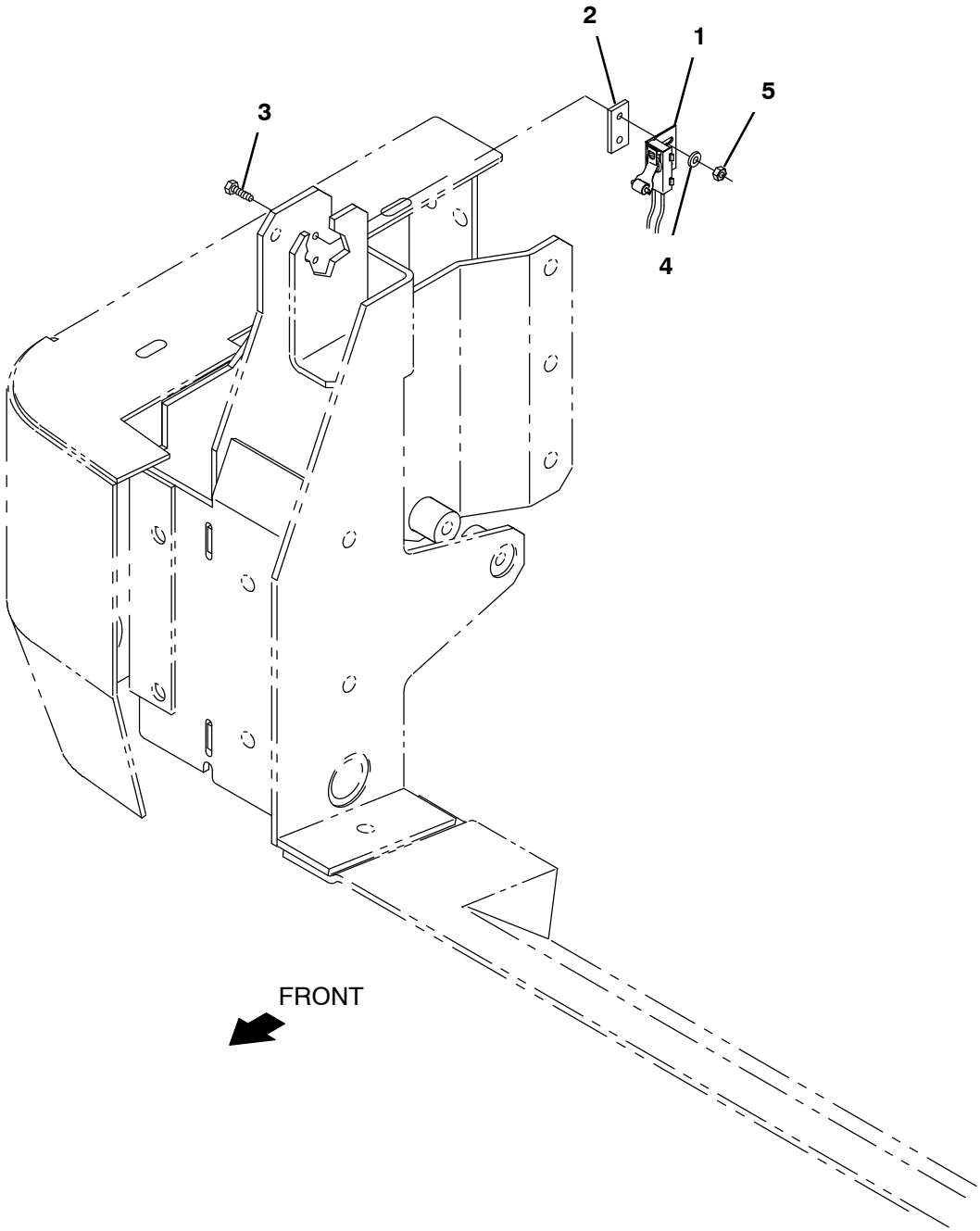

07582 – ALL

	Ref.	Part No.	Serial Number	Description	Qty.
▽		79037	(008467–)	Light Kit, Hppr Door, Ci [800l]	1
▲	1	59962	(008467–)	Switch, Snap, 15a Nc, Rlr	1
▲	2	74018	(008467–)	Spacer	1
▲	3	12316	(008467–)	Screw, Hex, M5 X 0.80 X 25, Ss	1
▲	4	01683	(008467–)	Washer, Flat, 10, Ss	1
▲	5	09739	(008467–)	Nut, Hex, Lock, M5 X 0.80, Nl, Ss	1

Fig. 8 – Back–Up Alarm Kit

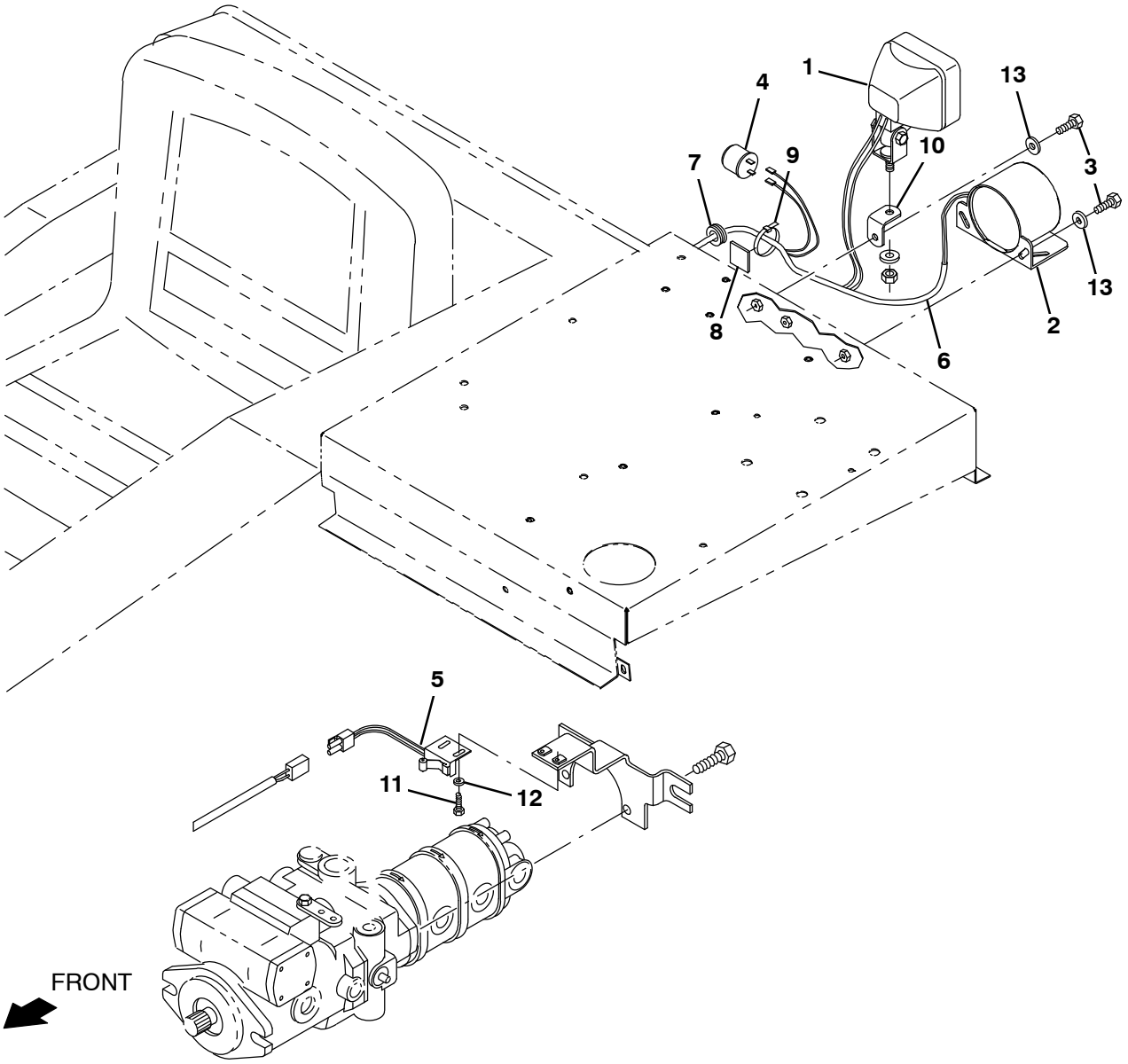

351137 – G/LP

	Ref.	Part No.	Serial Number		Description	Qty.
▽		9012890	(008467–	)	Alarm Kit, Backup / A/V, Ci [800gray]	1
▲▽	1	382978	(008467–	)	Light, Spot 12V, 32cp	1
▲▲		393770	(008467–	)	Lamp, 12VDC 55w	1
▲	2	9007131	(008467–	)	Alarm Assy, Backup, 12/48vdc	1
▲	3	06943	(008467–	)	Screw, Hex, M6 X 1.00 X 20, 8.8	3
▲	4	24576	(008467–	)	Flasher, 12v	1
▲	5	59965	(008467–	)	Switch Assy, Roller–no	1
▲	6	380691	(008467–	)	Harness, Alarm, Back–up	1
▲	7	10632–1	(008467–	)	Grommet, Rbr, 1.06id, F/1.4h, .19 Matl	1
▲	8	55248	(008467–	)	Mount, Tie	2
▲	9	49266	(008467–	)	Tie, Cable	2
▲	10	1073927	(008467–	)	Bracket, Angle [Gray]	1
▲	11	09206	(008467–	)	Screw, Hex, M4 X 0.70 X 12, 8.8	2
▲	12	19065	(008467–	)	Washer, Flat, 08	2
▲	13	32483	(008467–	)	Washer, Flat, 0.25, Sae	3

Fig. 9 – Turn Signal Kit

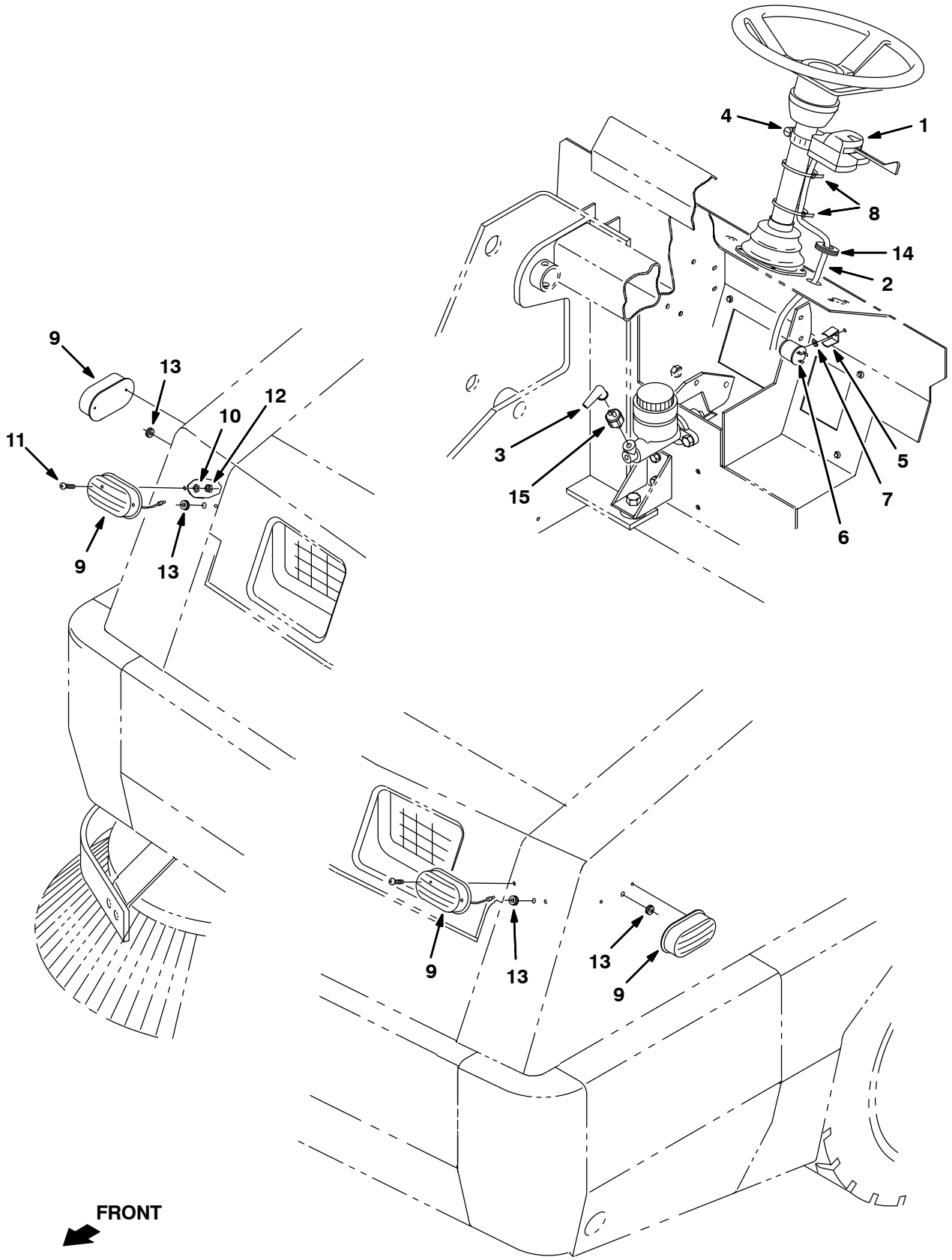

353840 – ALL

Fig. 9 – Turn Signal Kit

	Ref.	Part No.	Serial Number		Description	Qty.
▽		380712	(008467–	)	Kit, Signal, Turn	1
▲	1	60751	(008467–	)	Signal Turn	1
▲	2	76423	(008467–	)	Harness, Directional	1
▲	3	61365	(008467–	)	Boot, 90deg .44id 0.62id 1.69l, Blk	1
▲	4	11531	(008467–	)	Clamp–Wormdrive, 0.81– 1.50D	1
▲	5	24576–1	(008467–	)	Bracket, Flasher	1
▲	6	31922	(008467–	)	Flasher Heavy Duty	1
▲	7	41139	(008467–	)	Washer–Loc Int–Ext 10 Pltd	1
▲	8	49266	(008467–	)	Tie, Cable	4
▲▽	9	34848	(008467–	)	Light Assy Mark/Yel 12V– . A	4
▲▲		87948	(008467–	)	Bulb, #194	1
▲	10	41140	(008467–	)	Washer–Loc Int–Ext .25 Pltd	8
▲	11	06927	(008467–	)	Screw, Pan, M04	8
▲	12	02850	(008467–	)	Nut, Hex, Lock	8
▲	13	10632–5	(008467–	)	Grommet Rbr 0.25Id For .09Matl	5
▲	14	10632–8	(008467–	)	Grommet,Rbr,0.75Id,For .13Matl	1
▲	15	13959	(008467–	)	Switch	1

Fig. 10 – Overhead Guard Kit

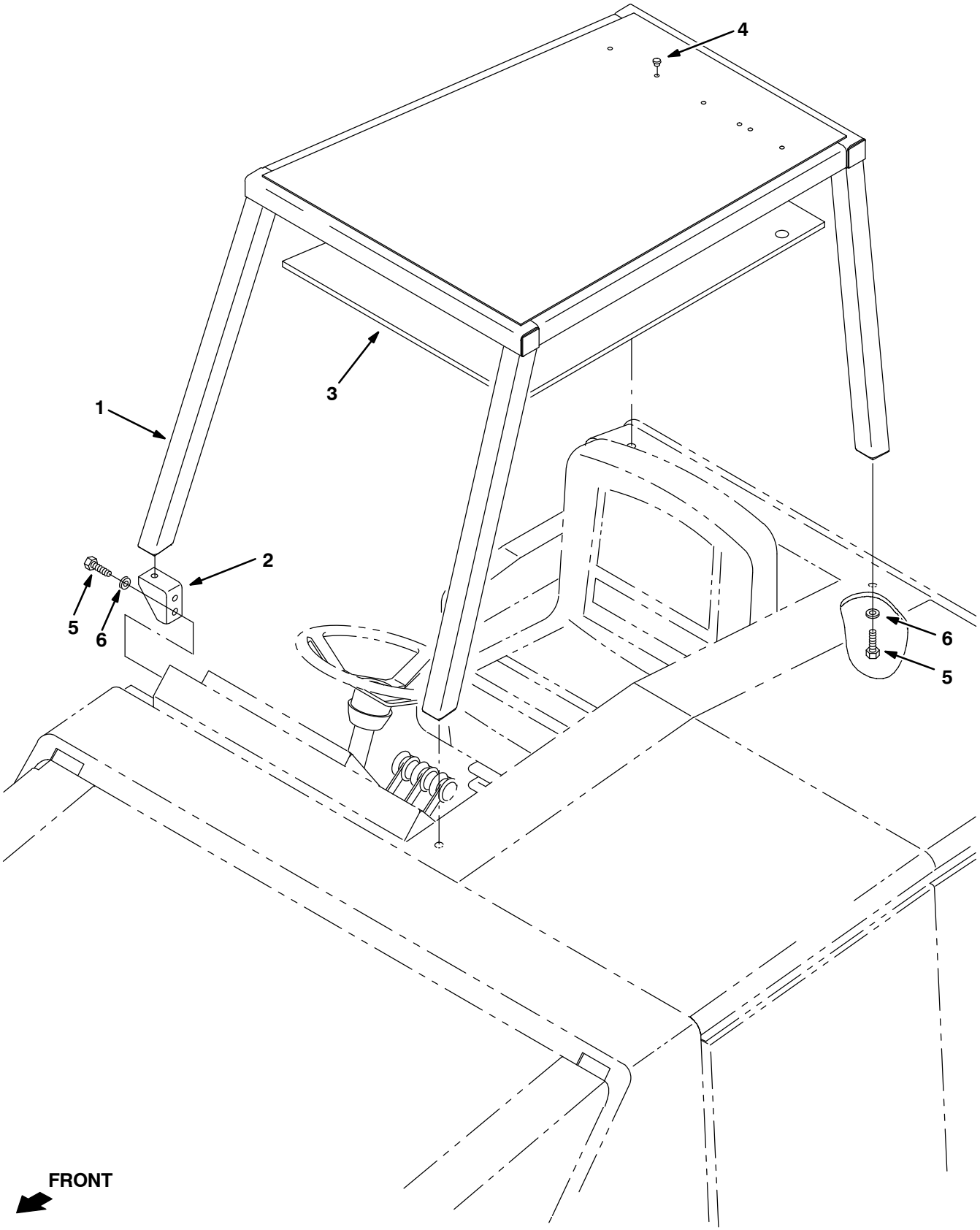

07652 – ALL

Fig. 10 – Overhead Guard Kit

	Ref.	Part No.	Serial Number		Description	Qty.
▽		9012880	(008467–	)	Ohg Kit, Ci [800l Gray]	1
▲	1	1073869	(008467–	)	Guard Wldt, Ohg [800 Gray]	1
▲	2	1073877	(008467–	)	Bracket, Mtg, Ohg [800 Gray]	1
▲	3	74007	(008467–	)	Foam, Insulation	1
▲	4	33806	(008467–	)	Plugbutton	6
▲	5	41345	(008467–	)	Screw, Hex, M12 X 1.75 X 25, 8.8	6
▲	6	32486	(008467–	)	Washer, Flat, 0.53b 1.06d .10, Stl, Pl	6

Fig. 11 – Hopper Floor Kit

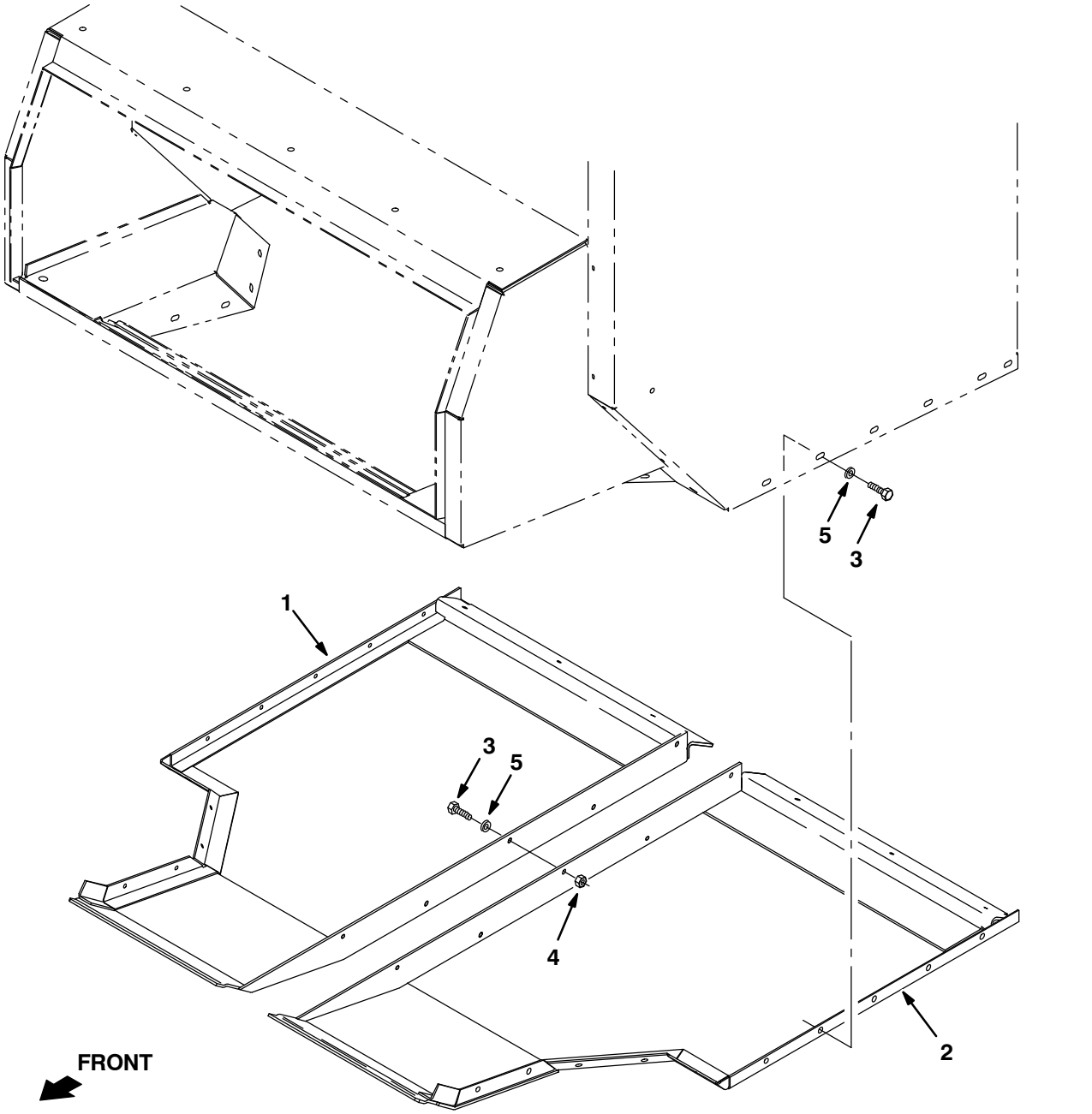

07668 – 800

	Ref.	Part No.	Serial Number	Description	Qty.
▽		9012892	(008467–)	Floor Kit, Hppr, Ssb, Ci [800lgray]	1
▲	1	1073946	(008467–)	Panel, Hppr, Bottom, Rh [800 B/Green Ss]	1
▲	2	1073947	(008467–)	Panel, Hppr, Bottom, Lh [800 B/Green Ss]	1
▲	3	09028	(008467–)	Screw, Hex, M10 X 1.50 X 25, Ss	5
▲	4	08714	(008467–)	Nut, Hex, Lock, M10 X 1.5, Nl, Ss	5
▲	5	32491	(008467–)	Washer, FLAT, 0.31, STD	5

Fig. 12 – Bumper Assembly, SE

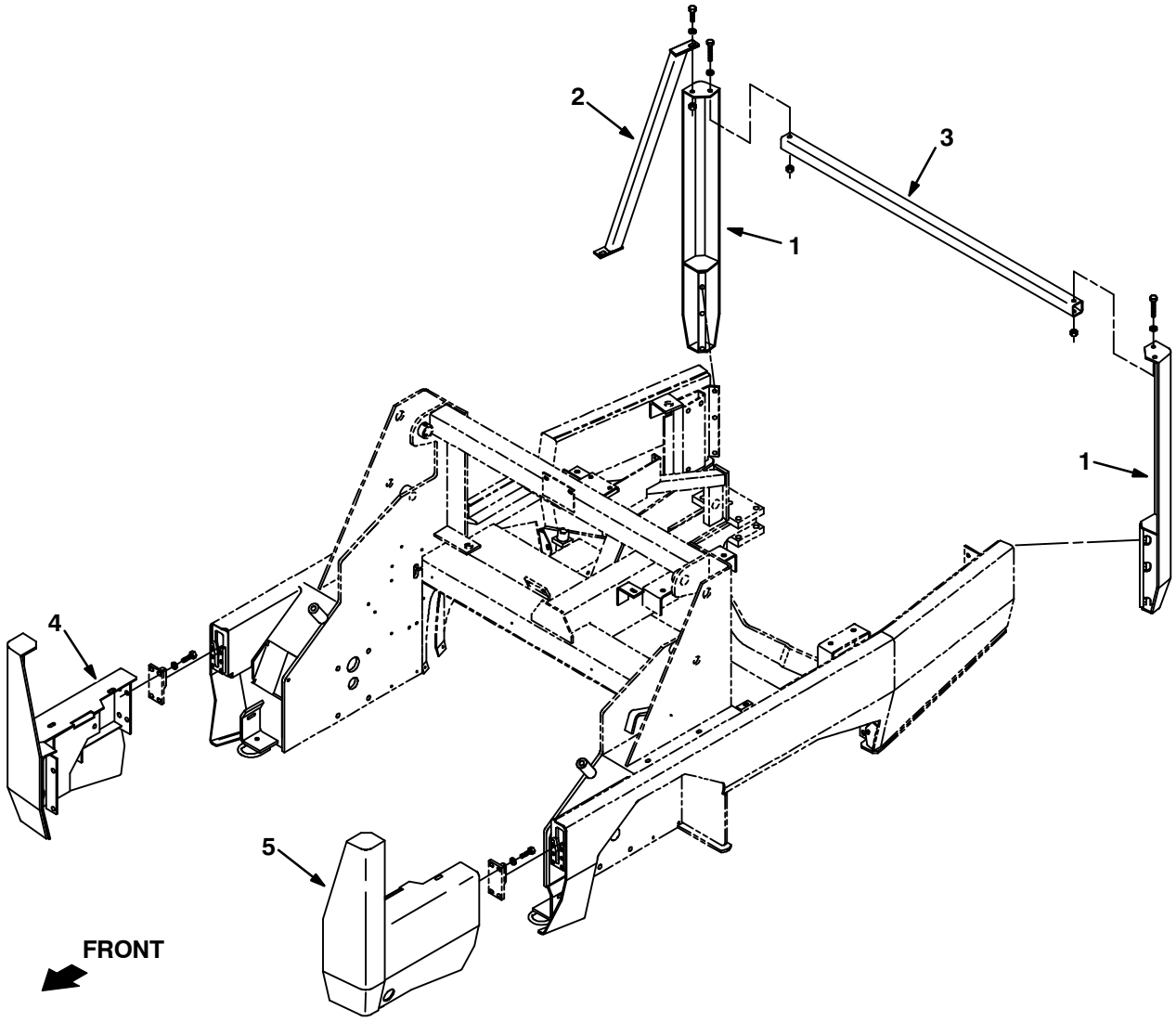

09909 – ALL

	Ref.		Serial Number		Description	Qty.
▽		9012884	(008467–	)	Bumper Kit, Se, Ci [800l Gray]	1
▲	1	1073879	(008467–	)	Leg Wldt, Bmpr, Se [800 Gray]	2
▲	2	1073878	(008467–	)	Brace Wldt, Bmpr, Se [800 Gray]	1
▲	3	1073843	(008467–	)	Bumper Wldt, Rh [800 Gray]	1
▲	4	1073929	(008467–	)	Bumper Wldt, Se, Rh, Front [Gray]	1
▲	5	1073950	(008467–	)	Bumper Wldt, Se, Lh, Front [Gray]	1

Fig. 13 – Side Brush Lift Group, L.H.

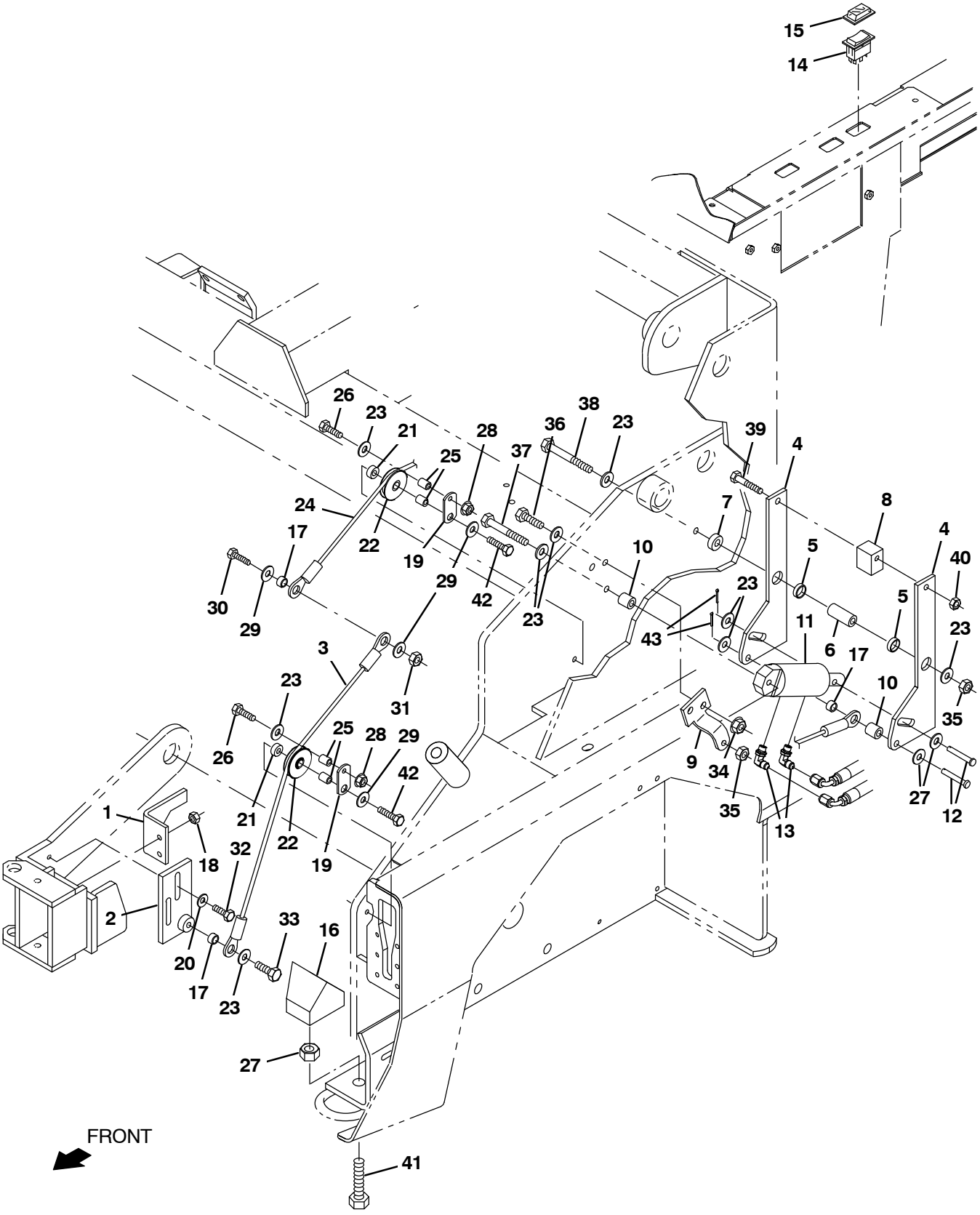

07741 – ALL

Fig. 13 – Side Brush Lift Group, L.H.

Ref.	Part No.	Serial Number	Description	Qty.
1	77458	(008467–)	Bracket, Angle, Side Brush	1
2	77569	(008467–)	Plate Wldt, Mtg, Side Brush Pivot Arm	1
3	70532	(008467–)	Cable, Glv .25d 021.2l .63eye /.63eye	1
4	77584	(008467–)	Plate, Mtg, Cyl, Side Brush	2
5	74090	(008467–)	Bushing, Sleeve, 0.75b 0.88d 0.25l	2
6	77597	(008467–)	Tube, 0.41id 0.75od 01.8l, Stl	1
7	77727	(008467–)	Tube, 0.44id 1.00od 00.4l, Stl	1
8	77459	(008467–)	Bar, Flat, Stl 1.00, 01.20 X 01.5l	1
9	77783	(008467–)	Bracket, Angle, Cyl Mtg	1
10	77600	(008467–)	Tube, 0.41id 0.75od 00.8l, Stl	2
11	1041034	(008467–)	Cylinder, Hyd, 1.5b 06.3l 01.50strk 2500	1
12	51813	(008467–)	Pin, Clevis, 0.37d X 2.12l	2
13	77097	(008467–)	Fitting, Hyd, E90, Jm04/Om04	2
14	65561	(008467–)	Switch, Rocker, Spst, On / Off	1
15	57807	(008467–)	Cover, Seal, Rocker Switch	1
16	77738	(008467–)	Block, Stop, Side Brush	1
17	65174	(008467–)	Tube, 0.44id 0.62od 00.4l, Stl	3
18	33342	(008467–)	Nut, Hex, Lock, M16 X 2.00, Nl	1
19	375415	(008467–)	Link, 0.12, 1.0w 02.2l 1/0.3h 1/0.5h	2
20	41186	(008467–)	Washer, Flat, Belleville, .31	2
21	73737	(008467–)	Tube, 0.38id 0.75od 00.3l, Ss	2
22	74391	(008467–)	Pulley Assy, Cable, 2.0d 0.50b	2
23	32492	(008467–)	Washer, Flat, 0.38, Std	14
24	23936	(008467–)	Cable, Glv .25d 016.8l .64eye /.64eye	1
25	80395	(008467–)	Sleeve, P/M, 0.32b 0.50d 0.7l [430ss]	4
26	76570	(008467–)	Screw, Hex, M8 X 1.25 X 30, 8.8	2
27	39311	(008467–)	Nut, Hex, Std, M8 X 1.25	1
28	07791	(008467–)	Nut, Hex, Flng, M8 X 1.25	2
29	33924	(008467–)	Washer, Flat, M10, Ss	4
30	09770	(008467–)	Screw, Hex, M10 X 1.50 X 25, Nl, Ss	1
31	32715	(008467–)	Nut, Hex, Lock, M10 X 1.5, Ss	1
32	09010	(008467–)	Screw, Hex, M8 X 1.25 X 25, Ss	2
33	39283	(008467–)	Screw, Hex, M10x1.50x25, 8.8	1
34	07792	(008467–)	Nut, Hex, Flng, M10 X 1.50	2
35	41430	(008467–)	Nut, Hex, Lock, M10 X 1.5, Nl	2
36	39284	(008467–)	Screw, Hex, M10 X 1.50 X 35, 8.8	2
37	06965	(008467–)	Screw, Hex, M10 X 1.50 X 80, 8.8	1
38	03193	(008467–)	Screw, Hex, M10 X 1.50 X 90, 8.8	1
39	06957	(008467–)	Screw, Hex, M8 X 1.25 X 60, 8.8	1
40	08709	(008467–)	Nut, Hex, Lock, M8 X 1.25, Nl	1
41	77752	(008467–)	Screw, Hex, M16 X 2.00 X 70, 8.8, Fl	1
42	41342	(008467–)	Screw, Hex, M8 X 1.25 X 40, 8.8	2
43	08179	(008467–)	Pin, Cotter, .094 X 1.00	2

Fig. 14 – Side Brush Hydraulic Solenoid Valve Group, L.H.

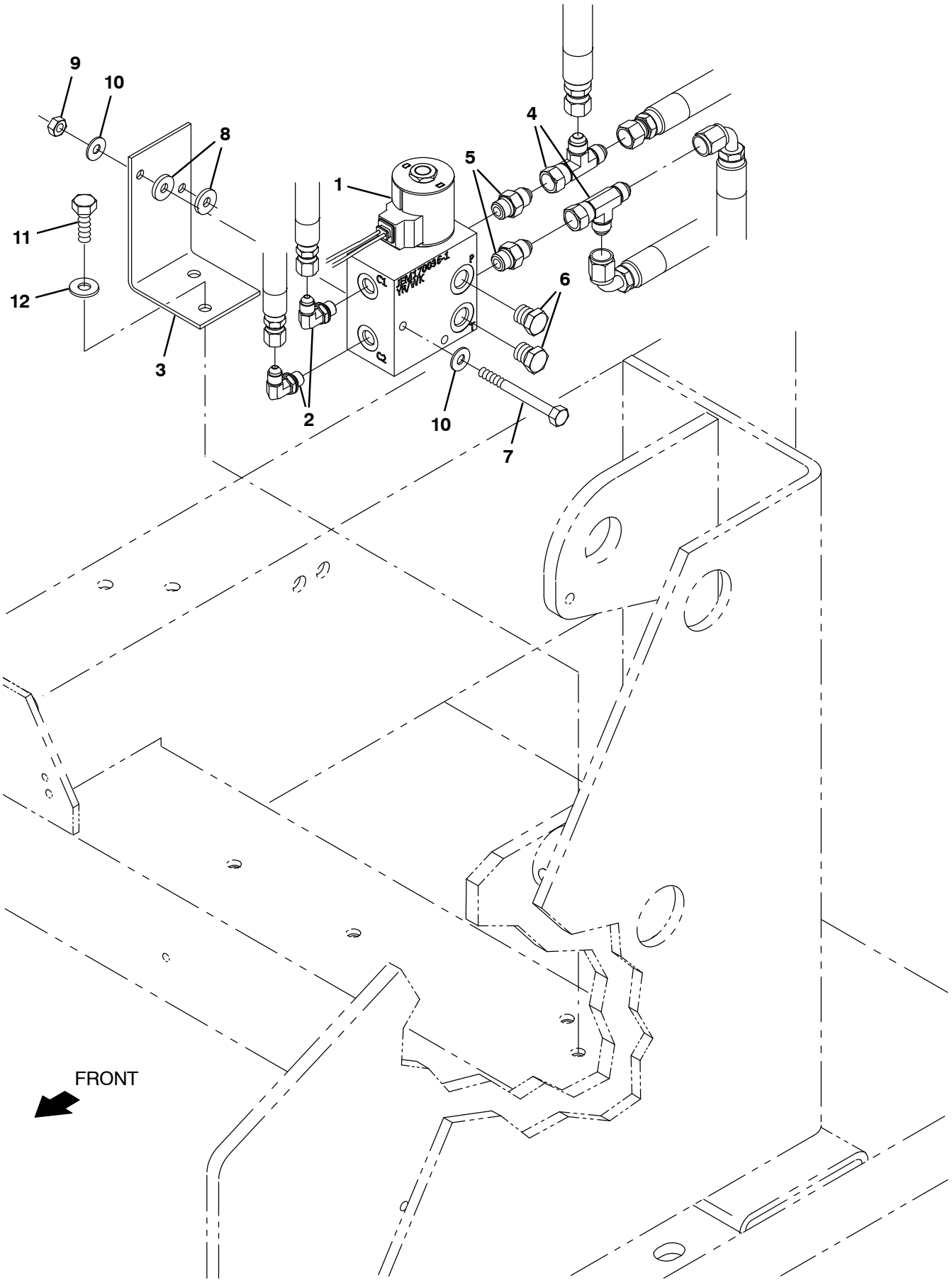

356815 – ALL

Fig. 14 – Side Brush Hydraulic Solenoid Valve Group, L.H.

Ref.	Part No.	Serial Number	Description	Qty.
1	1049211	(008467–008631)	Valve, Cntrl, Hyd, Solenoid, 12vdc 06gpm (See Breakdowns)	1
1	1237092	(008632–)	Valve, Hyd, Solenoid, 6gpm [1049211] (See Breakdowns)	1
2	77097	(008467–)	Fitting, Hyd, E90, Jm04/Om04	4
3	21231	(008467–)	Bracket, Side Brush, Valve	1
4	42215	(008467–)	Fitting, Hyd, Tee, Jf06/Jm06/Jm06, Run	2
5	56690	(008467–)	Fitting, Hyd, Str Jm06/Om06	2
6	46482	(008467–)	Fitting, Hyd, Plug Om06	2
7	06548	(008467–)	Screw, Hex, M6 X 1.0 X 60, 8.8	2
8	63416	(008467–)	Washer, Rbr, .12 0.31b 0.88d	2
9	08708	(008467–)	Nut, Hex, Lock, M6 X 1.0, Nl	2
10	19066	(008467–)	Washer, Flat, #10	4
11	16931	(008467–)	Screw, Hex, M8 X 1.25 X 20, 8.8	1
12	32491	(008467–)	Washer, Flat, 0.31 Std	2

Fig. 15 – Side Brush Motor Group, L.H.

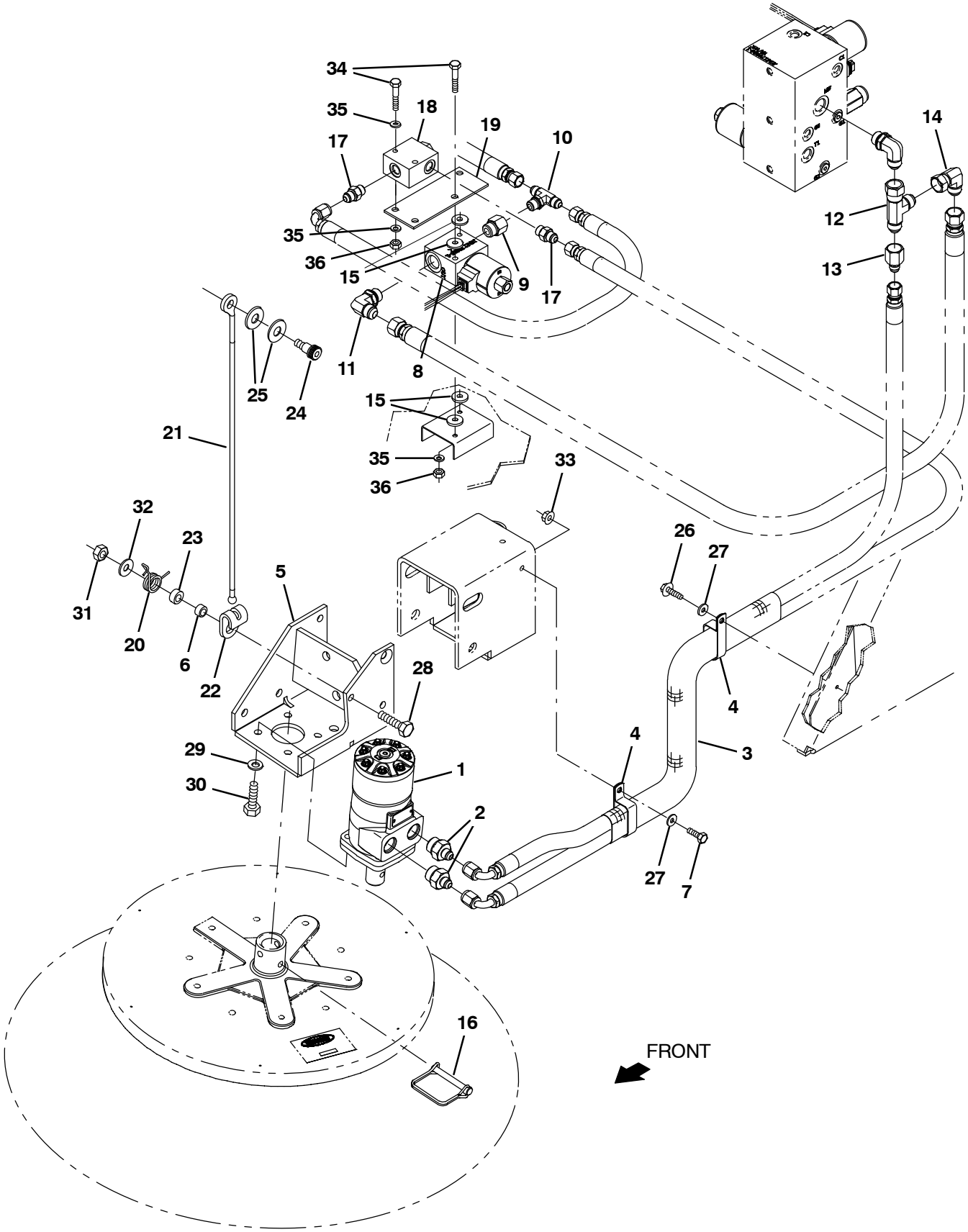

356599 – G, LP

Fig. 15 – Side Brush Motor Group, L.H.

Ref.	Part No.	Serial Number	Description	Qty.
1	1057338	(008467–)	Motor, Hyd, Gear, Int 17.9 Bi–Dir 2500	1
2	47508	(008467–)	Fitting, Hyd, Str, Jm06/Om10	2
3	76461	(008467–)	Sleeve, Nylon #27 55.Ol	1
4	67366	(008467–)	Clamp, Cable, Stl, 1.0x2.0x0.62w, 1hole	2
5	1073921	(008467–)	Bracket Wldt, Mtg, Motor [Gray]	1
6	65174	(008467–)	Tube, 0.44id 0.62od 00.4l, Stl	
7	06944	(008467–)	Screw, Hex, M6 X 1.0 X 25, 8.8	1
8	1049210	(008467–008631)	Valve, Cntrl, Hyd, Solenoid, 12vdc 12gpm (See Breakdowns)	1
8	1237091	(008632–)	Valve, Hyd, Solenoid, 12gpm [1049210] (See Breakdowns)	1
9	47637	(008467–)	Fitting, Hyd, Str, Of06/Om08	1
10	67683	(008467–)	Fitting, Hyd, Tee, Jm06/Jm06/Om06, Br	1
11	44868	(008467–)	Fitting, Hyd, E90, Jm08/Om08	1
12	45482	(008467–)	Fitting, Hyd, Tee, Jf08/Jm08/Jm08, Run	1
13	47753	(008467–)	Fitting, Hyd, Str, Jf08/Jm06	1
14	17980	(008467–)	Fitting, Hyd, E90, Jf08/Jm08	1
15	63416	(008467–)	Washer, .310B .88D .12Rbr	4
16	84581	(008467–)	Pin Assy, .312X3.0 W/Lanyard	1
17	56690	(008467–)	Ftg–Hyd Str Jm06/Om06	2
18	79621	(008467–)	Check Valve, 100 Psi	1
19	1073928	(008467–)	Plate, Mtg, Check Valve [Gray]	1
20	375403	(008467–)	Spring, Torsion	1
21	375401	(008467–)	Cable	1
22	1017898	(008467–)	Hook, Cable, .44d Ball	1
23	375404	(008467–)	Spacer	1
24	36758	(008467–)	Bolt, Shld, .50d X 0.50, .38–16	1
25	32486	(008467–)	Washer, Flat	2
26	12459	(008467–)	Screw, Hex, M6 X 1.0 X 20, Fmg	1
27	41185	(008467–)	Washer, Belleville, .25	2
28	39284	(008467–)	Screw, Hex, M10 X 1.5 X 35, 8.8	1
29	32485	(008467–)	Washer, Flat, 0.38 Sae	4
30	34195	(008467–)	Screw, Hex, .38–16 X 1.00, Nl	4
31	41430	(008467–)	Nut, Hex, Lock, M10 X 1.5, Nl	1
32	32492	(008467–)	Washer, Flat, 0.38 Std	1
33	07790	(008467–)	Nut, Hex, Flng, M6 X 1.00	1
34	06548	(008467–)	Screw, Hex, M6 X 1.00 X 60, 8.8	4
35	32490	(008467–)	Washer, Flat, 0.25, Std	6
36	08708	(008467–)	Nut, Hex, Lock, M6 X 1.00, Nl	4

Fig. 16 – Side Brush Pivot Group, L.H.

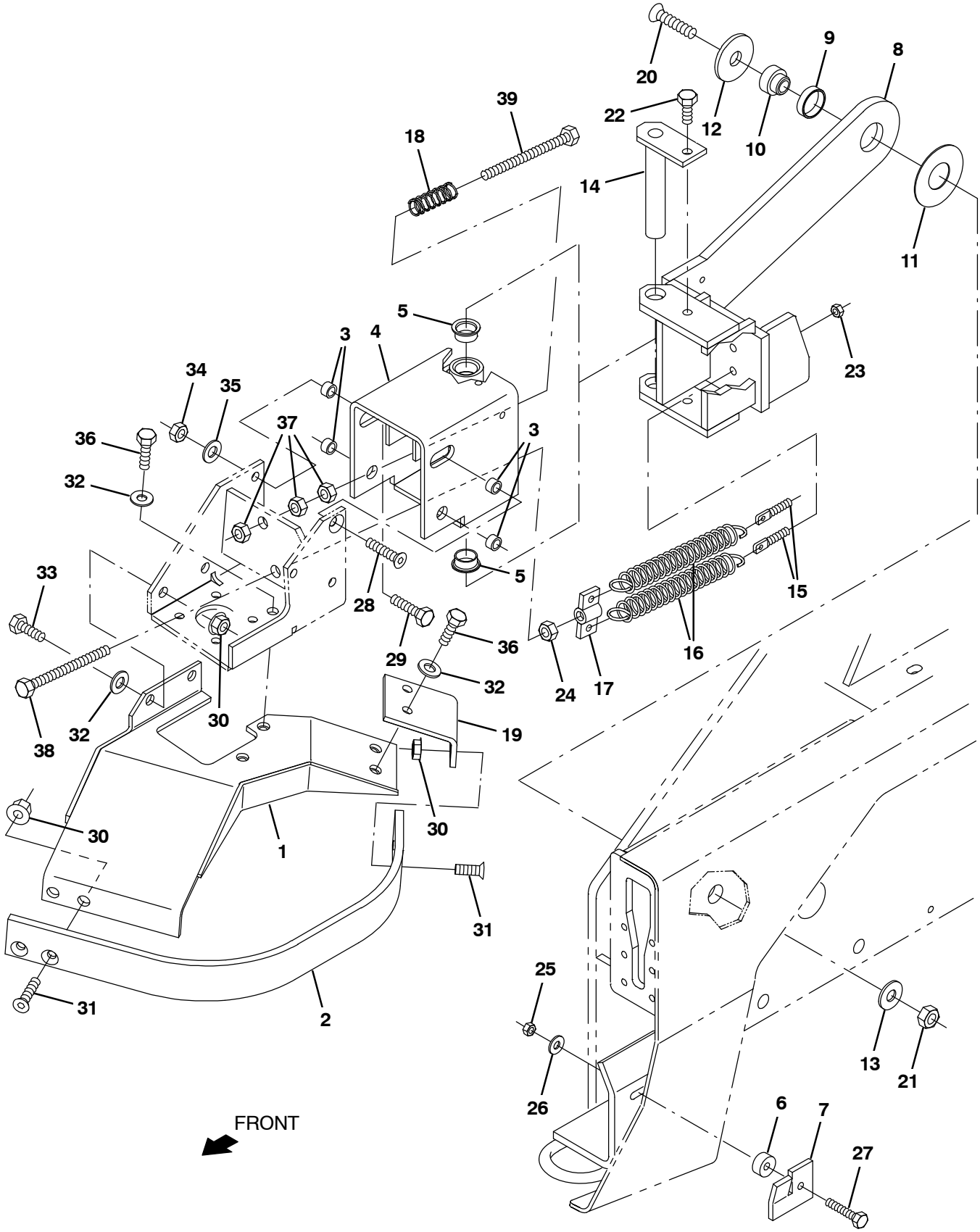

356600 – G, LP

Fig. 16 – Side Brush Pivot Group, L.H.

Ref.	Part No.	Serial Number	Description	Qty.
1	1073938	(008467–)	Guard Wldt, Brush, Side [800 Gray]	1
2	1073889	(008467–)	Guard, Side, Brush [800 Gray]	1
3	65174	(008467–)	Tube, 0.44id 0.62od 00.4l, Stl	4
4	1073912	(008467–)	Bracket Wldt, Pivot [Gray]	1
5	04761	(008467–)	Bearing, Flange .875 Bore	2
6	74059	(008467–)	Spacer	1
7	1074295	(008467–)	Bracket, Channel, Mtg [800 Gray]	1
8	1073913	(008467–)	Bracket Wldt, Lift [Gray]	1
9	70627	(008467–)	Bearing	1
10	70526	(008467–)	Shaft, Pivot	1
11	70524	(008467–)	Washer, Flat, 1.30b 3.00d .06, Stl	1
12	70525	(008467–)	Washer, Flat, 0.71b 2.25d .19, Stl, Csk	1
13	36328	(008467–)	Washer, Flat, Belleville, .50	1
14	70431	(008467–)	Pin	1
15	70626	(008467–)	Bolt–Eye M8–1.25	2
16	65160	(008467–)	Spring, Extension	2
17	1074290	(008467–)	Bracket, Spring [Gray]	1
18	65180	(008467–)	Spring, Comp	1
19	1074294	(008467–)	Bracket, Angle, Mtg, Guard, Side Brush	1
20	20192	(008467–)	Screw, Flt, Soc, .50–13 X 2.00, Al	1
21	32985	(008467–)	Nut, Hex, Lock, .50–13, Nl	1
22	09291	(008467–)	Screw, Hex, M10 X 1.5 X 20, Ss	1
23	39311	(008467–)	Nut, Hex, Std, M8 X 1.25	2
24	39312	(008467–)	Nut, Hex, Std, M10 X 1.5	1
25	08709	(008467–)	Nut, Hex, Lock, M8 X 1.25, Nl	1
26	32491	(008467–)	Washer, Flat, 0.31, Std	1
27	41342	(008467–)	Screw, Hex, M8 X 1.25 X 40, 8.8	1
28	06535	(008467–)	Screw, Flt, M10 X 1.5 X 35, 10.9	1
29	39284	(008467–)	Screw, Hex, M10 X 1.5 X 35, 8.8	2
30	07792	(008467–)	Nut, Hex, Flng, M10 X 1.5	6
31	09081	(008467–)	Screw, Flt, M10 X 1.5 X 25, 10.9	4
32	32485	(008467–)	Washer, Flat, 0.38 Sae	5
33	39283	(008467–)	Screw, Hex, M10 X 1.5 X 25, 8.8	2
34	41430	(008467–)	Nut, Hex, Lock, M10 X 1.5, Nl	4
35	32492	(008467–)	Washer, Flat, 0.38 Std	7
36	09770	(008467–)	Screw, Hex, M10 X 1.5 X 25, Ss, Nl	2
37	07787	(008467–)	Nut, Hex, Std, M10 X 1.5, Ss	3
38	76438	(008467–)	Screw, Hex, M10 X 1.5 X 90, 8.8, Fl	1
39	06537	(008467–)	Screw, Hex, M10 X 1.50 X 120, 8.8, Fl	1

Fig. 17 – Side Brush Wire Harness Group, L.H.

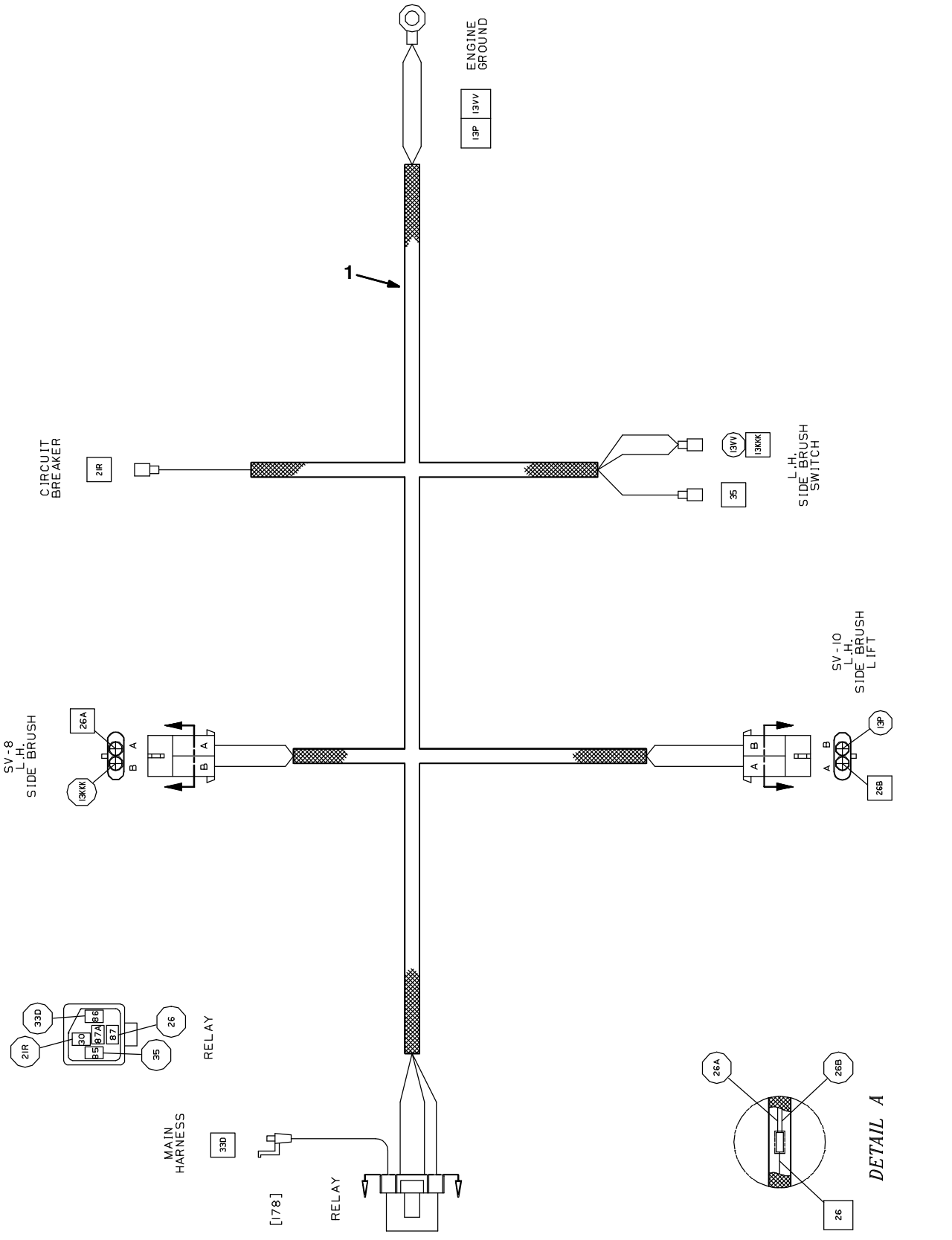

10501 – ALL

Ref.	Part No.	Serial Number	Description	Qty.
1	83699	(008467–)	Harness, Side Brush, L.H.	1

Fig. 18 – Side Brush Hydraulic Hose Group, L.H.

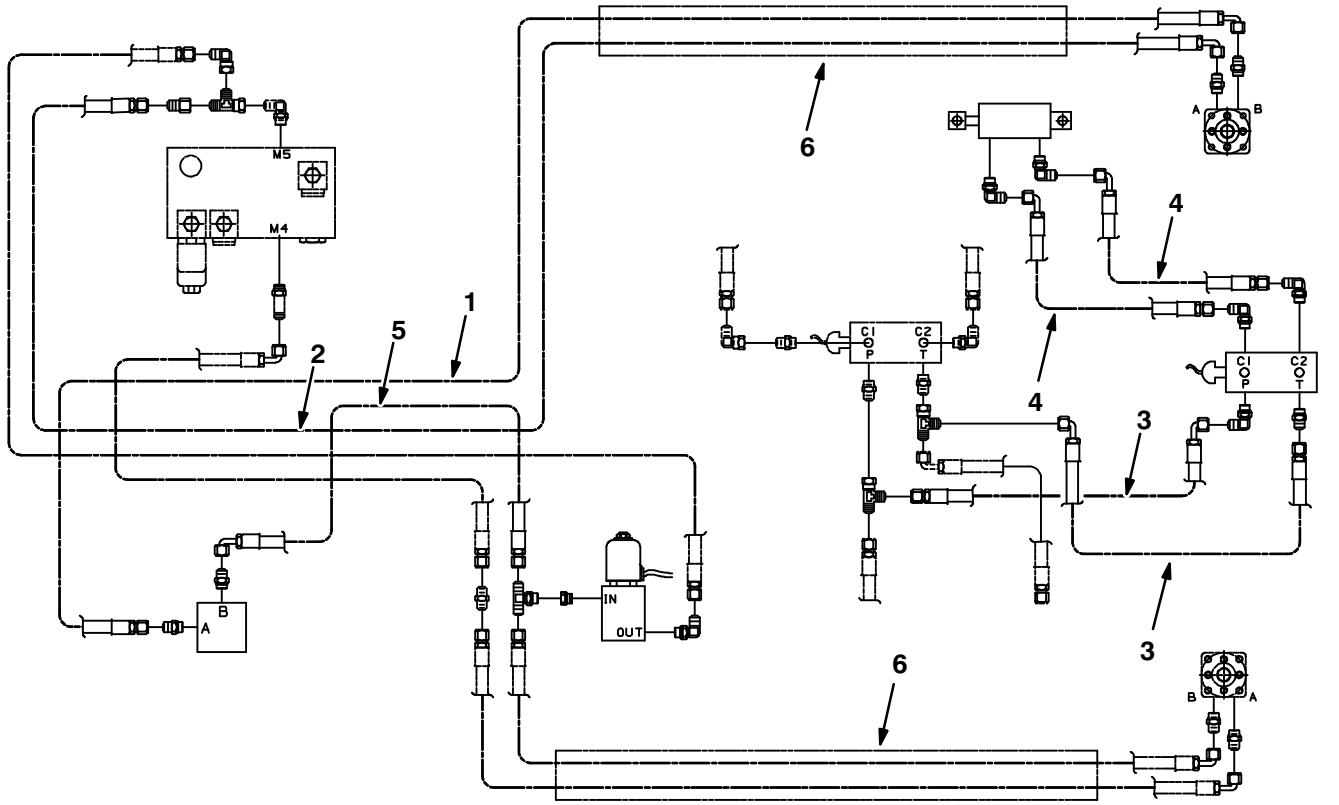

08763 – ALL

Ref.	Part No.	Serial Number	Description	Qty.
1	76684	(008467–)	Hose–Hyd Med 06	1
2	65194	(008467–)	Hose, Hyd, Med06, Jf06e90/Jf06str, 072.0	1
3	78998	(008467–)	Hose–Hyd Med 06	2
4	57963	(008467–)	Hose–Hyd Med 04	2
5	01999	(008467–)	Hose–Hyd Med 06	1
6	76461	(008467–)	Sleeve, Nyl, #27 55.0l	2

Fig. 19 – Side Brush Light Kit

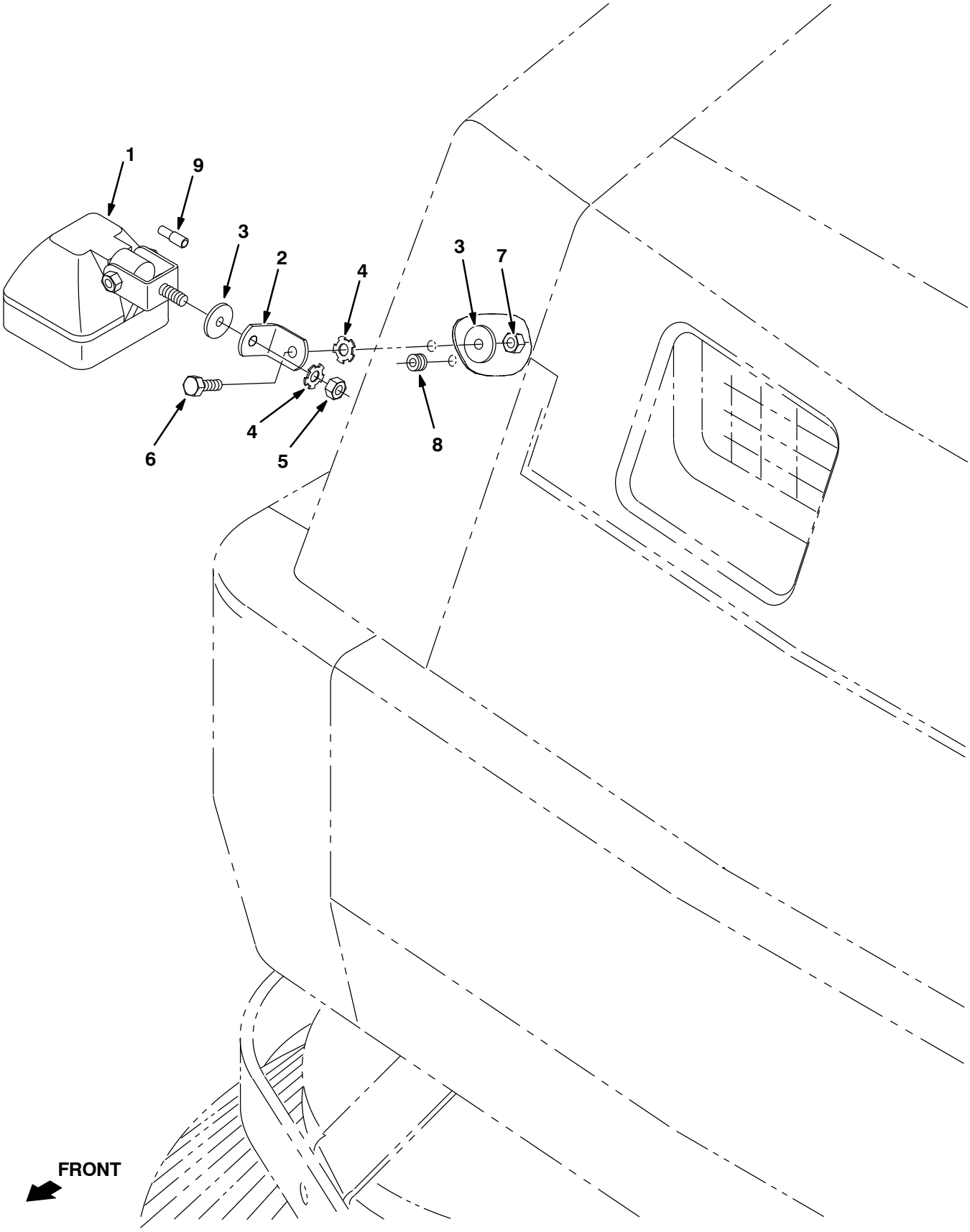

08756 – ALL

Fig. 19 – Side Brush Light Kit

	Ref.	Part No.	Serial Number	Description	Qty.
▽		9012891	(008467–)	Light Kit, Brush, Side, Ci [800gray]	1
▲▽	1	382979	(008467–)	Light, Spot, 12VDC 55w	1
▲▲		393770	(008467–)	Lamp, 12VDC 55w	1
▲	2	1073927	(008467–)	Bracket, Angle [Gray]	1
▲	3	30013	(008467–)	Washer, Flat, 0.31 Fender	1
▲	4	41141	(008467–)	Washer–Loc Int–Ext .31 Pltd	2
▲	5	32960	(008467–)	Nut, Hex, Lock, .31–24, Nl	1
▲	6	16931	(008467–)	Screw, Hex, M08 X 1.25 X 20, 8.8	1
▲	7	08709	(008467–)	Nut, Hex, Lock, M08 X 1.25,Nl	1
▲	8	10632–5	(008467–)	Grommet Rbr 0.25Id For .09Matl	1
▲	9	32668	(008467–)	Connector, Ele, Plug, Femal, .156d	1

Fig. 20 – Cab Kit

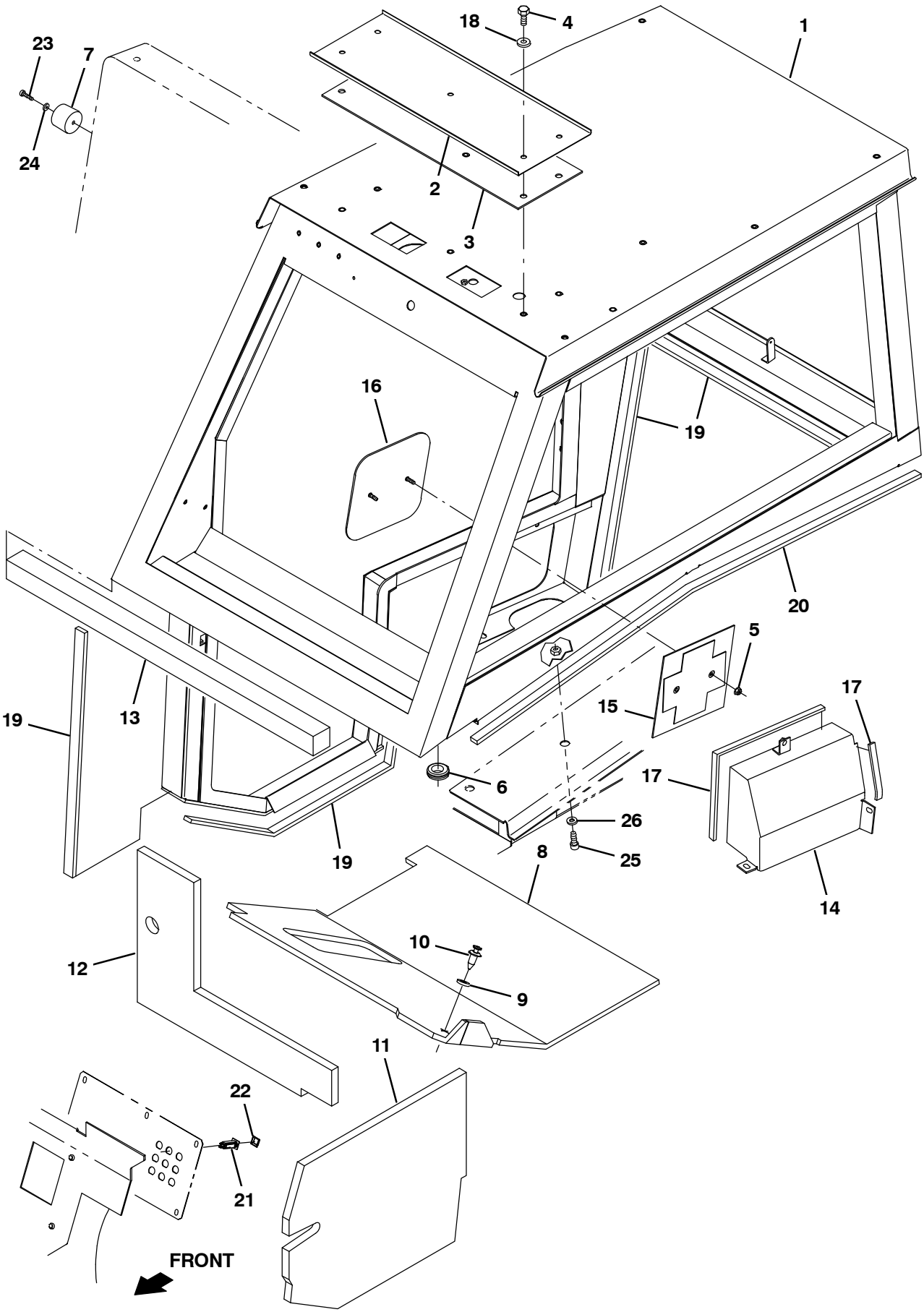

Fig. 20 – Cab Kit

NOTE: The Cab kit, TENNANT Part Number 9012866 includes Fig. 20, Fig. 21, and Fig. 22.

Ref.	Part No.	Serial Number	Description	Qty.
1	9012887	(008467–)	Cab Assy, Oprtr [800 Gray]	1
2	1073908	(008467–)	Cover, Pressrzr, Cab [Gray]	1
3	380635	(008467–)	Gasket, Cab Pressurizer	1
4	06943	(008467–)	Screw, Hex, M6 X 1.00 X 20, 8.8	4
5	07790	(008467–)	Nut, Hex, Flng, M6 X 1.00	2
6	10632–14	(008467–)	Grommet, Rbr, 1.00id, F/1.4h, .12 Matl	1
7	44851	(008467–)	Bumper, Rubber	1
8	76522	(008467–)	Tread, Rubber	1
9	41178	(008467–)	Washer–Flt .25 Fender	1
10	21246	(008467–)	Rivet, Plastic	1
11	77652	(008467–)	Insulation, Acstc, Side, Lower, .8t	1
12	76516	(008467–)	Insulation, Acstc, Front, Lower	1
13	1068383	(008467–)	Seal, Foam, 2.00 2.00w 37.0l, Adh	1
14	1073870	(008467–)	Cover Wldt, Fuel Inlet [800 Gray]	1
15	70785	(008467–)	Plate Wldt, Inlet, Fuel (LPG Only)	1
16	1073873	(008467–)	Cover, Cab, Lpg [800 Gray]	1
17	1015224	(008467–)	Seal, Afmkt, Ure, Adh, 0.38, 0.75w 01ft	2
18	32490	(008467–)	Washer, Flat, 0.25, Std	4
19	1015184	(008467–)	Seal, Afmkt, Ure, Adh, 0.50, 1.00w 03ft	6
20	1015182	(008467–)	Seal, Afmkt, Ure, Adh, 0.50, 1.00w 08ft	1
21	1064188	(008467–)	Circuitbreaker, 15A, Resetable	1
22	1064191	(008467–)	Boot, Circuitbreaker	1
23	09258	(008467–)	Screw, Pan, Phl, M6 X 1.00 X 40, 4.8	1
24	32980	(008467–)	Washer, Lock, Int, 10	1
25	39309	(008467–)	Screw, Soc, M10 X 1.50 X 25, 12.9	4
26	32485	(008467–)	Washer, Flat, 0.38, Sae	4

Fig. 21 – Cab Mirror Kit

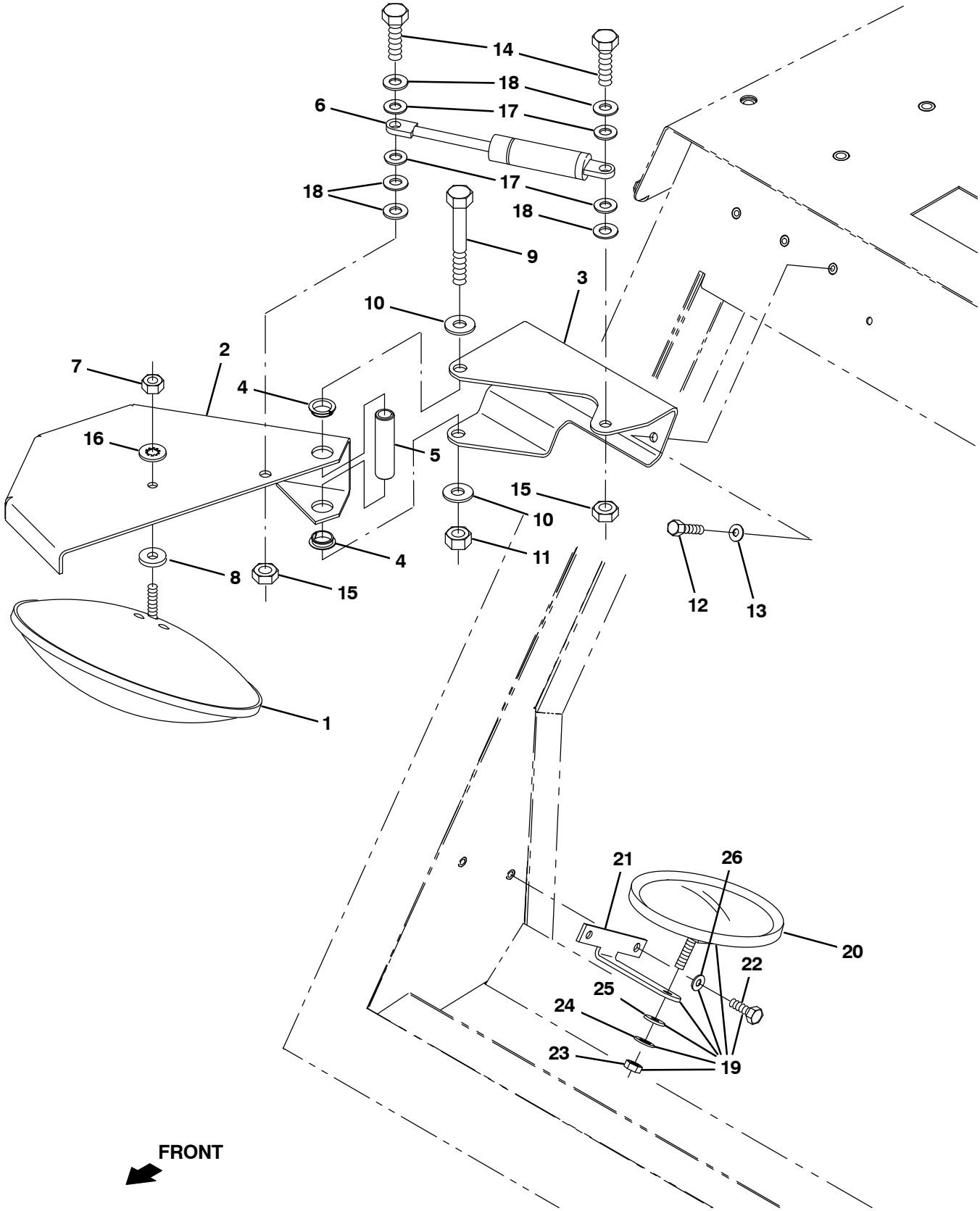

08961 – ALL

Fig. 21 – Cab Mirror Kit

NOTE: The Cab kit, TENNANT Part Number 9012866 includes Fig. 20, Fig. 21, and Fig. 22.

	Ref.	Part No.	Serial Number	Description	Qty.
▽		9012869	(008467–)	Mirror Kit, Brush, Side, Cab, Ci[800lgr]	1
▲	1	68445	(008467–)	Mirror,8.0 Round,Convex	1
▲	2	1073925	(008467–)	Guard, Mirror [Gray]	1
▲	3	1073932	(008467–)	Bracket, Mtg, Mirror [800 Gray]	1
▲	4	41434	(008467–)	Bshg,Flange,0.62Bx0.68Od,Nylon	2
▲	5	70761	(008467–)	Tube, 0.62D .44B 2.44, Stl	1
▲	6	12549	(008467–)	Spring, Gas 80 Lb	1
▲	7	01691	(008467–)	Nut, Hex, Std, .31–18, Ss	1
▲	8	01685	(008467–)	Washer, Flat, 0.38b 0.88d .08, Ss	1
▲	9	03193	(008467–)	Screw, Hex, M10 X 1.50 X 90, 8.8	1
▲	10	32485	(008467–)	Washer, Flat, 0.38, Sae	2
▲	11	41430	(008467–)	Nut, Hex, Lock, M10 X 1.5, Nl	1
▲	12	06942	(008467–)	Screw, Hex, M6 X 1.00 X 16, 8.8	3
▲	13	19066	(008467–)	Washer, Flat, 0.25b 0.56d .05, Pl, 10	3
▲	14	21197	(008467–)	Screw, Hex, .38–16 X 1.00, G5	2
▲	15	36643	(008467–)	Nut, Hex, Lock, .38–16, Nl, Thin	2
▲	16	43952	(008467–)	Washer, Lock, Int, 0.31, Ss	1
▲	17	43611	(008467–)	Washer, Flat, 0.39b 0.75d .06, Nyl	4
▲	18	32485	(008467–)	Washer, Flat, 0.38, Sae	5
▲▽	19	369786	(008467–)	Mirror Assembly	1
▲▲	20	1050295	(008467–)	Mirror, Convex, 0.50d	1
▲▲	21	1073867	(008467–)	Bracket, Mtg, Mirror, Rearview[800 Gray]	1
▲▲	22	06942	(008467–)	Screw, Hex, M6 X 1.00 X 16, 8.8	2
▲▲	23	01691	(008467–)	Nut, Hex, Std, .31–18, Ss	1
▲▲	24	43952	(008467–)	Washer, Lock, Int, 0.31 Ss	1
▲▲	25	01685	(008467–)	Washer, Flat, 0.31 Ss	1
▲▲	26	19066	(008467–)	Washer, Flat, 0.25b 0.56d .05, Pl, 10	2

Fig. 22 – Cab Seals Group

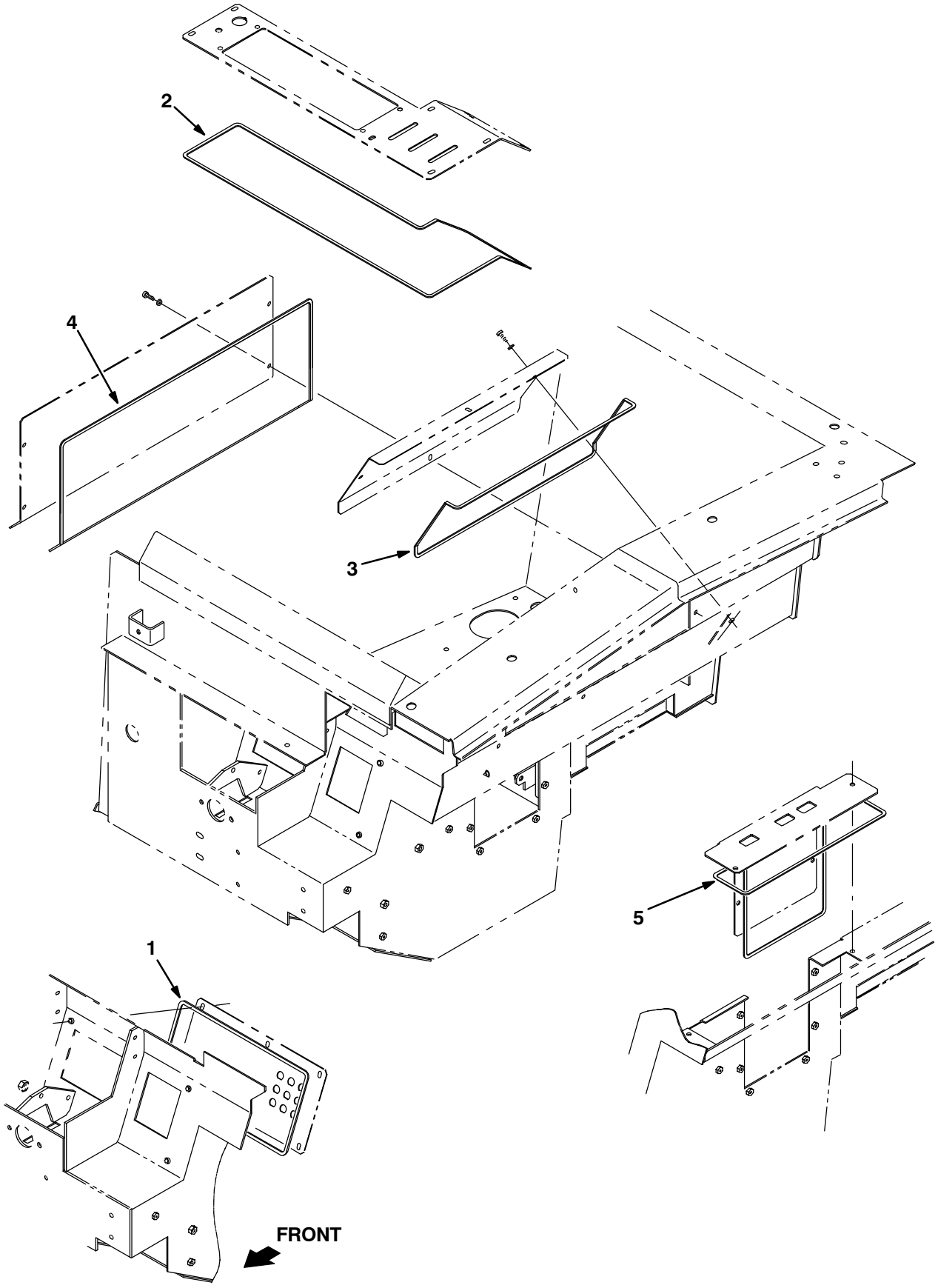

354321 – ALL

Fig. 22 – Cab Seals Group

NOTE: The Cab kit, TENNANT Part Number 9012866 includes Fig. 20, Fig. 21, and Fig. 22.

Ref.	Part No.	Serial Number	Description	Qty.
1	1021969	(008467–)	Seal, Foam, .06t .25w 42.0l	1
2	1021968	(008467–)	Seal, Foam, .06t .25w 84.0l	1
3	1021937	(008467–)	Seal, Foam, .06t .25w 54.0l	1
4	1021966	(008467–)	Seal, Foam, .06t .25w 76.0l	1
5	1021951	(008467–)	Seal, Foam, .06t .25w 34.0l	1

Fig. 23 – Cab AC and Heater Group

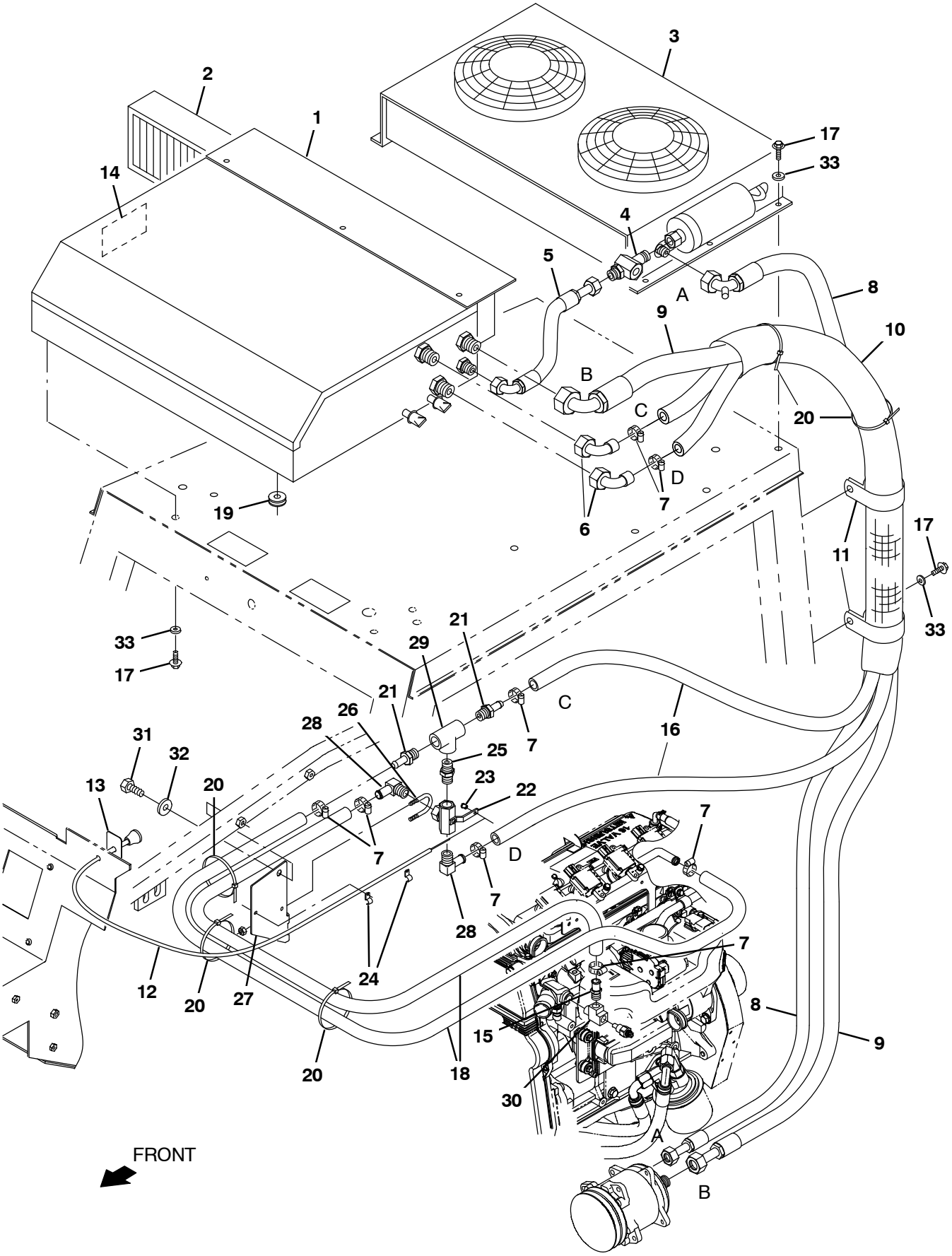

356735 – G, LP

Fig. 23 – Cab AC and Heater Group

	Ref.	Part No.	Serial Number		Description	Qty.
	1	1073904	(008467–	)	Box Assy, Heat/Ac (See Breakdowns)	1
	2	380689	(008467–	)	Filter,Panel 23.5X6.5X2 143Plts	1
	3	9012898	(008467–	)	Condenser, A/C, Roof [R134 Bd, Gray] (See Breakdowns)	1
	4	380630	(008467–	)	Gage, Sight Ac	1
	5	380684	(008467–	)	A/C Hose#6 134A 9.0L	1
	6	380615	(008467–	)	Elbow, Heater	2
	7	86824	(008467–	)	Clamp, Hose, Wormdrive, 0.50–1.06d, .50w	6
	8	1021799	(008467–	)	Hose, A/C, 8 112.0l Str E90 R134	1
	9	1021797	(008467–	)	Hose, A/C, 12 127.0l Str E90 R134	1
	10	375512	(008467–	)	Sleeve, Nyl, #33 65.0l	1
	11	41016	(008467–	)	Clamp, Hose	2
	12	43558A	(008467–	)	Cable, Choke	1
	13	380663	(008467–	)	Label, Pull–Heat	1
	14	380673	(008467–	)	Label,Caution R134A	1
	15	27767	(008467–	)	Fitting, Brass, Str	1
	16	1016561	(008467–	)	Hose, Afmkt, Rbr, Heater, 0.62id, 08ft	2
	17	12459	(008467–	)	Screw, Hex, M6 X 1.0 X 20, Fmg	14
	18	1016556	(008467–	)	Hose, Afmkt, Rbr, Heater, 0.62id, 03ft	1
	19	77811	(008467–	)	Grommet	1
	20	763116	(008467–	)	Tie, Cable, Nyl, 15.3l . W 4.5 Max D	6
▽		375728	(008467–	)	Valve Assy, Heater	1
▲	21	59901	(008467–	)	Fitting, Brass, Str	2
▲	22	31507	(008467–	)	Valve –3Way	1
▲	23	43242	(008467–	)	Swivel	1
▲	24	1043352	(008467–	)	Clamp, Cable, Stl, 0.18d X 0.75w, 1hole	2
▲	25	40573	(008467–	)	Fitting, Hyd. Str	1
▲	26	45142	(008467–	)	Bolt, U	1
▲	27	374129	(008467–	)	Bracket, Mtg. Valve	1
▲	28	30268	(008467–	)	Fitting, Brass	2
▲	29	24450	(008467–	)	Fitting, Brass, Tee	1
	30	601483	(008467–	)	Fitting, Brs, Tee, Pf06/Pf06/Pm06, Run	1
	31	16930	(008467–	)	Screw, Hex, M10 X 1.5 X 50, 8.8	1
	32	32492	(008467–	)	Washer, Flat, 0.38 Std	1
	33	32490	(008467–	)	Washer, Flat, 0.25 Std	14

Fig. 24 – Cab AC Compressor Group

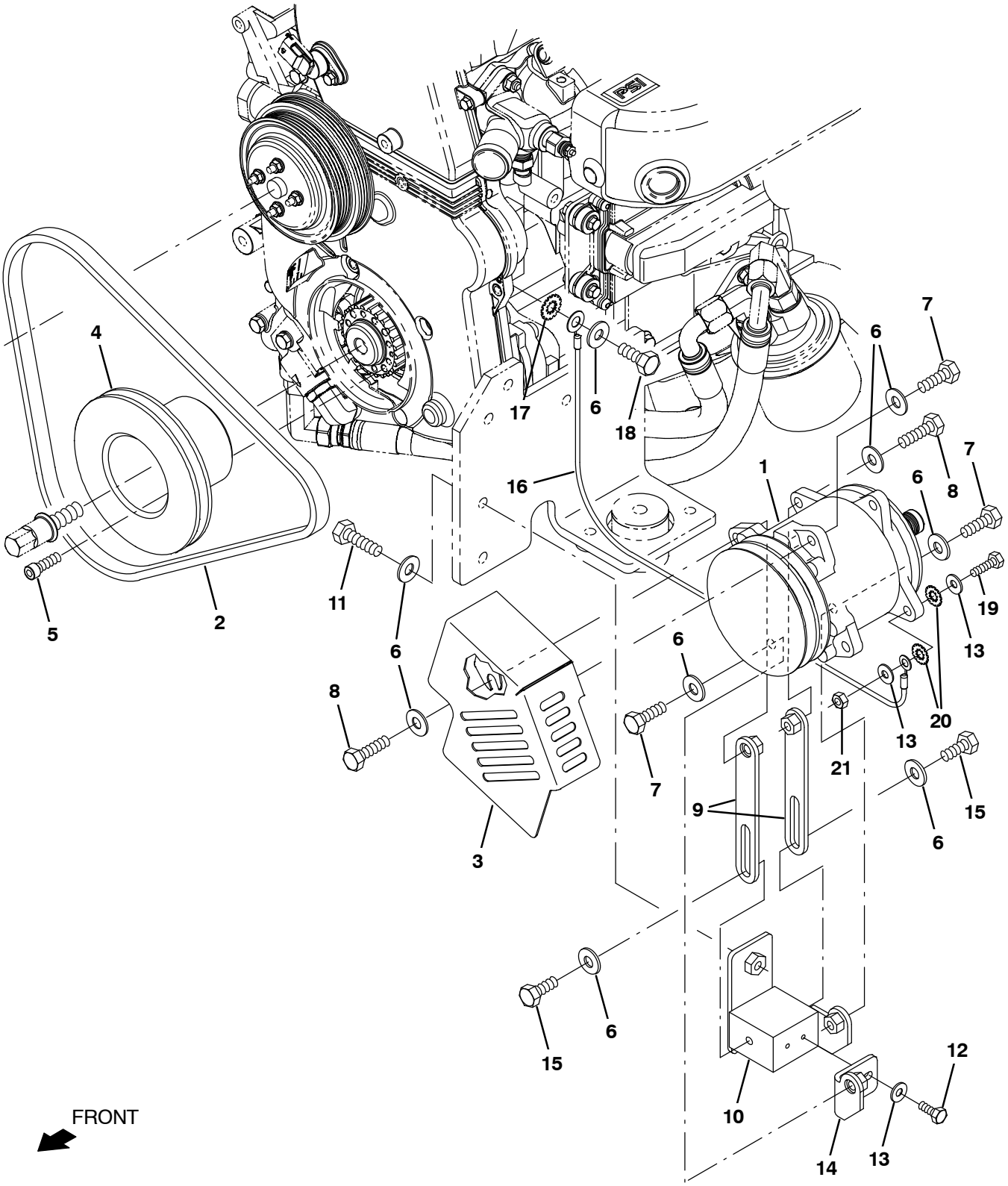

356724 – G, LP

Fig. 24 – Cab AC Compressor Group

Ref.	Part No.	Serial Number	Description	Qty.
1	1030582	(008467–)	Compressor, A/C [2007]	1
2	380544	(008467–)	Belt, V, 38.5l [Hc38]	1
3	1231255	(008467–)	Guard Wldt, Belt, A/C [800 G/Lp]	1
4	1075142	(008467–)	Sheave, A/C [800 Mits]	1
5	39308	(008467–)	Screw, Soc, M8 X 1.25 X 25, 12.9	4
6	32492	(008467–)	Washer, Flat, 0.38, Std	10
7	21198	(008467–)	Screw, Hex, .38–16 X 1.25, G5	3
8	36801	(008467–)	Screw, Hex, .38–16 X 1.50, Fl	2
9	1075100	(008467–)	Arm, Adj, Compressor, A/C	2
10	1075068	(008467–)	Bracket Wldt, Compressor, A/C [800 Mit]	1
11	03192	(008467–)	Screw, Hex, M10 X 1.50 X 30, 8.8	2
12	06942	(008467–)	Screw, Hex, M6 X 1.00 X 16, 8.8	2
13	32490	(008467–)	Washer, Flat, 0.25, Std	4
14	1075101	(008467–)	Bracket, Mtg, Compressor	2
15	21197	(008467–)	Screw, Hex, .38–16 X 1.00, G5	2
16	1073671	(008467–)	Cable, 10ga 16.0l Blk [M6 Ring/M12 Ring]	1
17	41142	(008467–)	Washer, Lock, Int–Ext, 0.38	1
18	58286	(008467–)	Screw, Hex, M10 X 1.25 X 20, 8.8	1
19	06945	(008467–)	Screw, Hex, M6 X 1.00 X 30, 8.8	1
20	41141	(008467–)	Washer, Lock, Int–Ext, 0.31	2
21	08708	(008467–)	Nut, Hex, Lock, M6 X 1.00, Nl	1

Fig. 25 – Cab AC and Heater Electrical Group

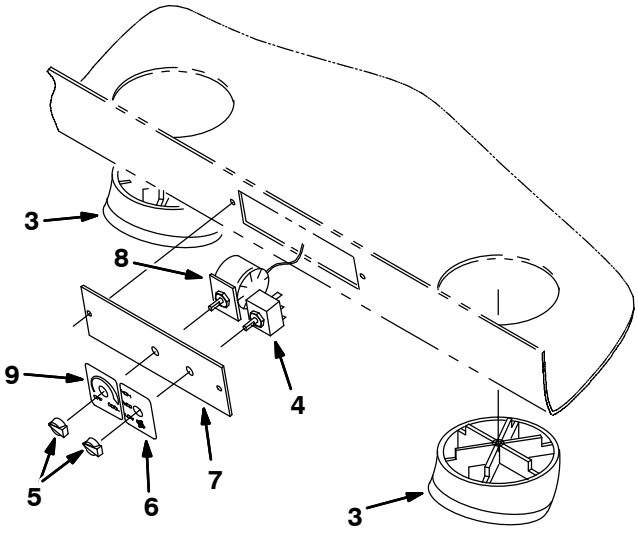

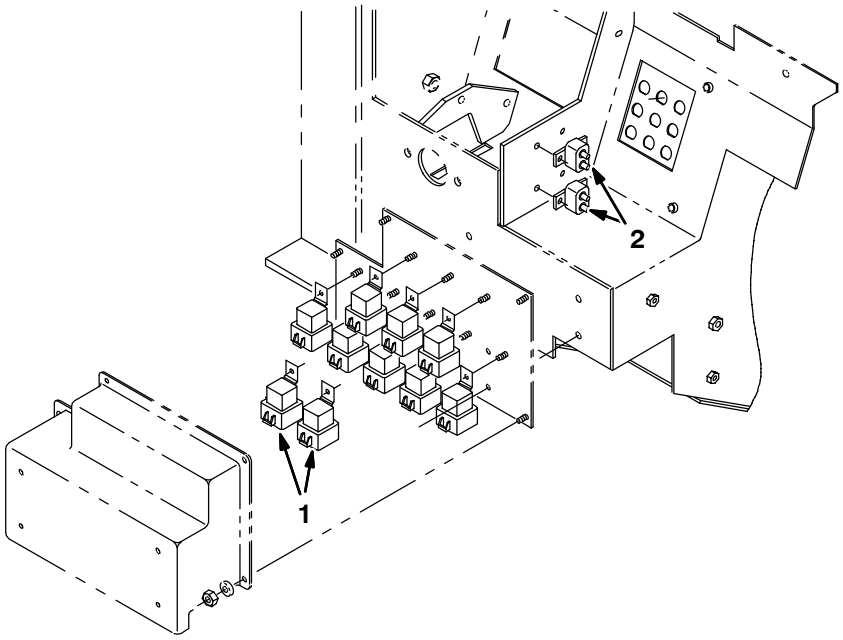

350815 – G, LP

Fig. 25 – Cab AC and Heater Electrical Group

Ref.	Part No.	Serial Number	Description	Qty.
1	56186	(008467–)	Relay, 12vdc, 040a, Spdt No	2
2	374210	(008467–)	Circuitbreaker, 20.0a, Thermal	2
3	380617	(008467–)	Louver, Adj, Heat–A/C [Badger]	2
4	380619	(008467–)	Switch, 3 Position, Blower, Heat	1
5	380661	(008467–)	Knob, Rnd, Cntrl, Heat–A/C	2
6	380662	(008467–)	Label, Opertnl, Fan [Hi/Med/Low, Ba]	1
7	380690	(008467–)	Plate, Mtg, Switch, A/C [Badger]	1
8	380624	(008467–)	Switch, Thermo, A/C [Badger]	1
9	380665	(008467–)	Label, Opertnl, Temp [Badger]	1

Fig. 26 – Cab Heater Group

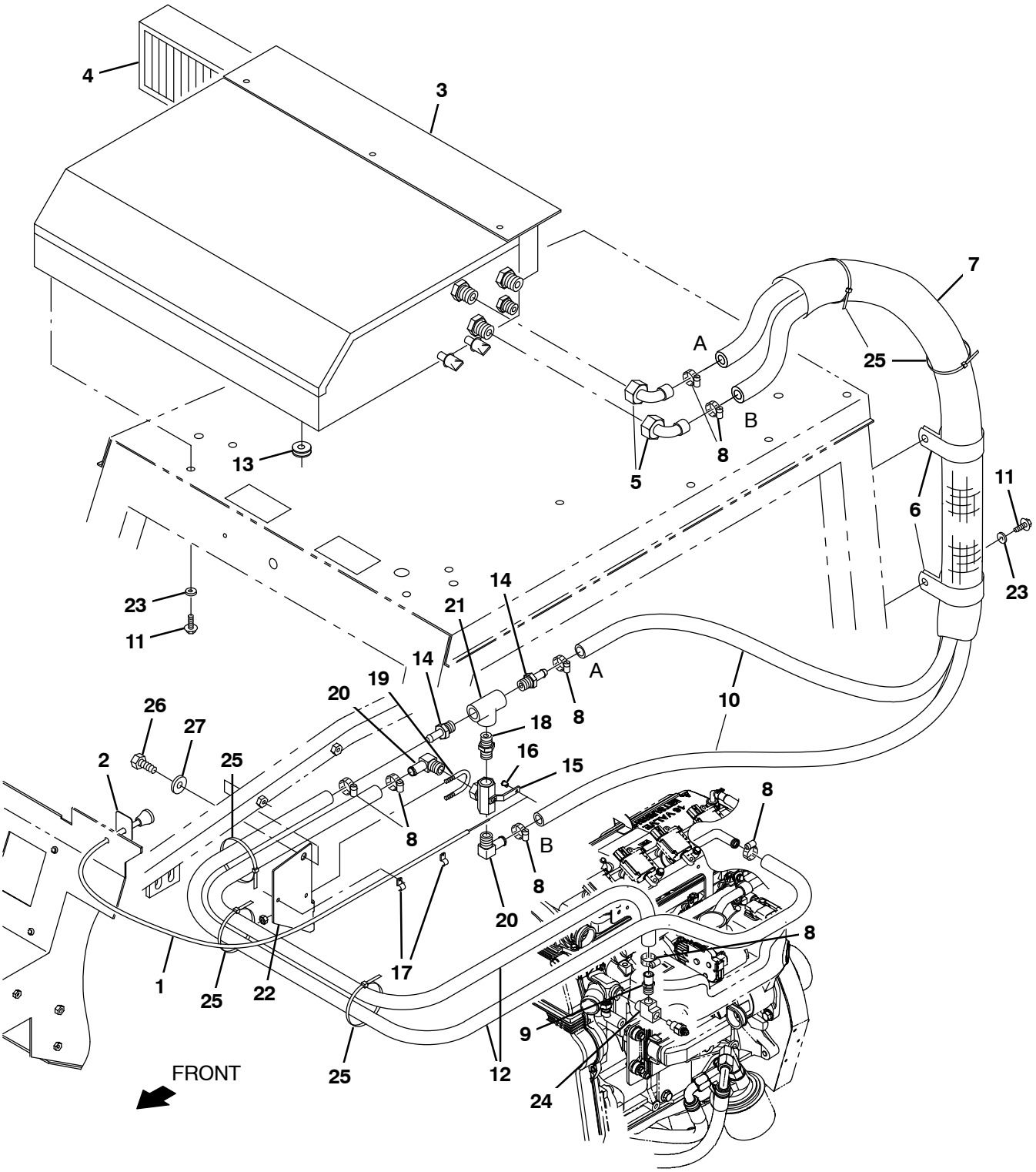

356734 – G, LP

Fig. 26 – Cab Heater Group

	Ref.	Part No.	Serial Number		Description	Qty.
	1	69266	(008467–	)	Cable, Cntrl, 34.0l, 10–32/ None	1
	2	380663	(008467–	)	Label, Opertnl, Pull Heat [Badger]	1
	3	1073905	(008467–	)	Heater [Badger, Gray]	1
	4	380689	(008467–	)	Filter, Panl	1
	5	380615	(008467–	)	Fitting, Elbow, Bm10 [Badger]	2
	6	86328	(008467–	)	Clamp, Cable, Stl, 1.50d X 0.75w, 1hole	2
	7	375512	(008467–	)	Sleeve, Nyl, 1.81id 65.0l	1
	8	86824	(008467–	)	Clamp, Hose, Wormdrive, 0.50–1.06d, .50w	6
	9	27767	(008467–	)	Fitting, Brs, Str, Em10/Pm06	1
	10	1016561	(008467–	)	Hose, Afmkt, Rbr, Heater, 0.62id, 08ft	2
	11	12459	(008467–	)	Screw, Hex, M6 X 1.00 X 20, Fmg	8
	12	1016556	(008467–	)	Hose, Afmkt, Rbr, Heater, 0.62id, 03ft	2
	13	77811	(008467–	)	Grommet, Cab, Harness, Wire	1
▽		375728	(008467–	)	Valve, Ball, 3way, Em10/Em10/Em10	1
▲	14	59901	(008467–	)	Fitting, Brs, Str, Em10/Pm08	2
▲	15	31507	(008467–	)	Valve, Ball, 3way, Pf08/Pf08/Pf08, Brs	1
▲	16	43242	(008467–	)	Bushing, Swivel, .247d X .35, .31hex, Pl	1
▲	17	1043352	(008467–	)	Clamp, Cable, Stl, 0.18d X 0.75w, 1hole	2
▲	18	40573	(008467–	)	Fitting, Hyd, Str, Pm08/Pm08	1
▲	19	45142	(008467–	)	Bolt, U, .25–20 X 2.00, 1.10id	1
▲	20	30268	(008467–	)	Fitting, Brs, E90, Em10/Pm08	2
▲	21	24450	(008467–	)	Fitting, Brs, Tee, Pf08/Pf08/Pf08	1
▲	22	374129	(008467–	)	Bracket, Mtg, Valve, Cntrl, Heater	1
	23	32490	(008467–	)	Washer, Flat, 0.25, Std	8
	24	601483	(008467–	)	Fitting, Brs, Tee, Pf06/Pf06/Pm06, Run	1
	25	763116	(008467–	)	Tie, Cable, Nyl, 15.3l . W 4.5 Max D	6
	26	16930	(008467–	)	Screw, Hex, M10 X 1.50 X 50, 8.8	1
	27	32492	(008467–	)	Washer, Flat, 0.38, Std	1

Fig. 27 – Vacuum Wand Kit

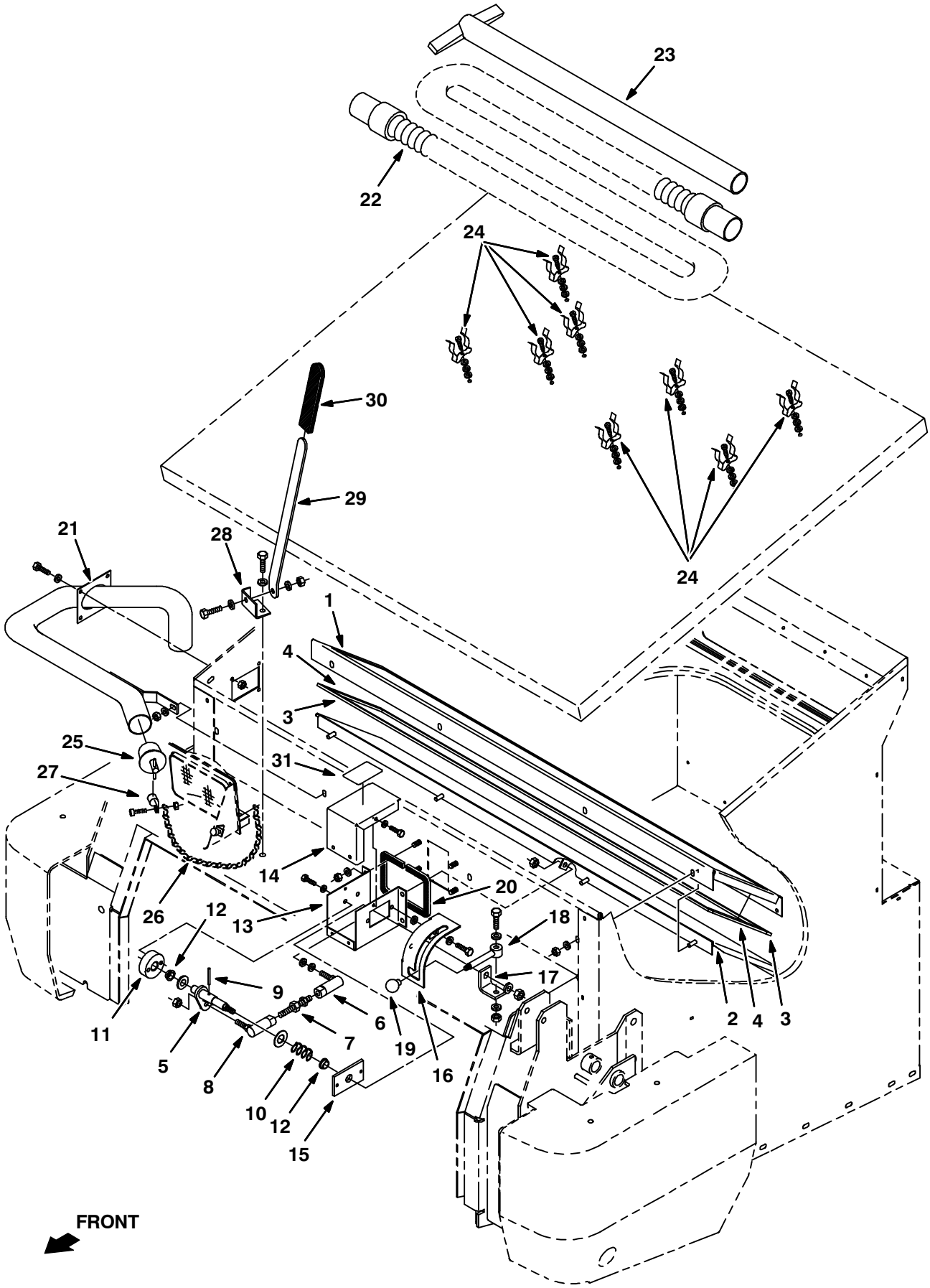

07672 – ALL

Fig. 27 – Vacuum Wand Kit

	Ref.	Part No.	Serial Number		Description	Qty.
▽		9012878	(008467–	)	Wand, Vacuum [800 Gray]	1
▲	1	73871	(008467–	)	Plate, Mounting, Vac Door	1
▲	2	75701	(008467–	)	Plate Wldt, Vac Door	1
▲	3	75876	(008467–	)	Seal, Foam Rbr, .19 .75W 47.1L	2
▲	4	75877	(008467–	)	Seal, Foam Rbr .19 .75W 8.43L	2
▲	5	21047	(008467–	)	Shaft	1
▲	6	82962	(008467–	)	Balljoint .375–24 Lh	1
▲	7	11676	(008467–	)	Stud, Adjustment	1
▲	8	51531	(008467–	)	Ball Joint .375–24	1
▲	9	23146	(008467–	)	Pin,Roll,.18Odx1.62L,.187/.192	1
▲	10	19035	(008467–	)	Sprng,Comp,0.83Idx.07Wire 1.0L	1
▲	11	21041	(008467–	)	Disk	1
▲	12	04843	(008467–	)	Bearing, Flange .625 Bore	2
▲	13	21054	(008467–	)	Box, Mounting, Lever, Vac	1
▲	14	21104	(008467–	)	Panel, Cover	1
▲	15	73880	(008467–	)	Plate	1
▲	16	79646	(008467–	)	Plate, Latch	1
▲	17	79647	(008467–	)	Angle	1
▲	18	79644	(008467–	)	Handle	1
▲	19	26565	(008467–	)	Knob,0.38–16,1.25Dia,Plastic	1
▲	20	79674	(008467–	)	Seal	1
▲	21	74074	(008467–	)	Adaptor Wldt, Vac Wand	1
▲	22	54009	(008467–	)	Hose&2Cuff Assy,Vinyl2.0Id10Ft	1
▲	23	1073868	(008467–	)	Wand Wldt [800 Gray]	1
▲	24	36158	(008467–	)	Clip Finger Grip	8
▲	25	42124	(008467–	)	Plug, Drain	1
▲	26	374012	(008467–	)	Chain, Jack, #12, 08.5l 11 Links	1
▲	27	26395–2	(008467–	)	Clamp–Cable, 0.38Dia 0.38Wth	1
▲	28	76286	(008467–	)	Adaptor Wldt, Vac Wand	1
▲	29	76338	(008467–	)	Bar, Prop	1
▲	30	70659	(008467–	)	Grip, Handle, Flat	2
▲	31	76406	(008467–	)	Label, Vac Wand	1

Fig. 28 – Side Brush Dust Control Kit

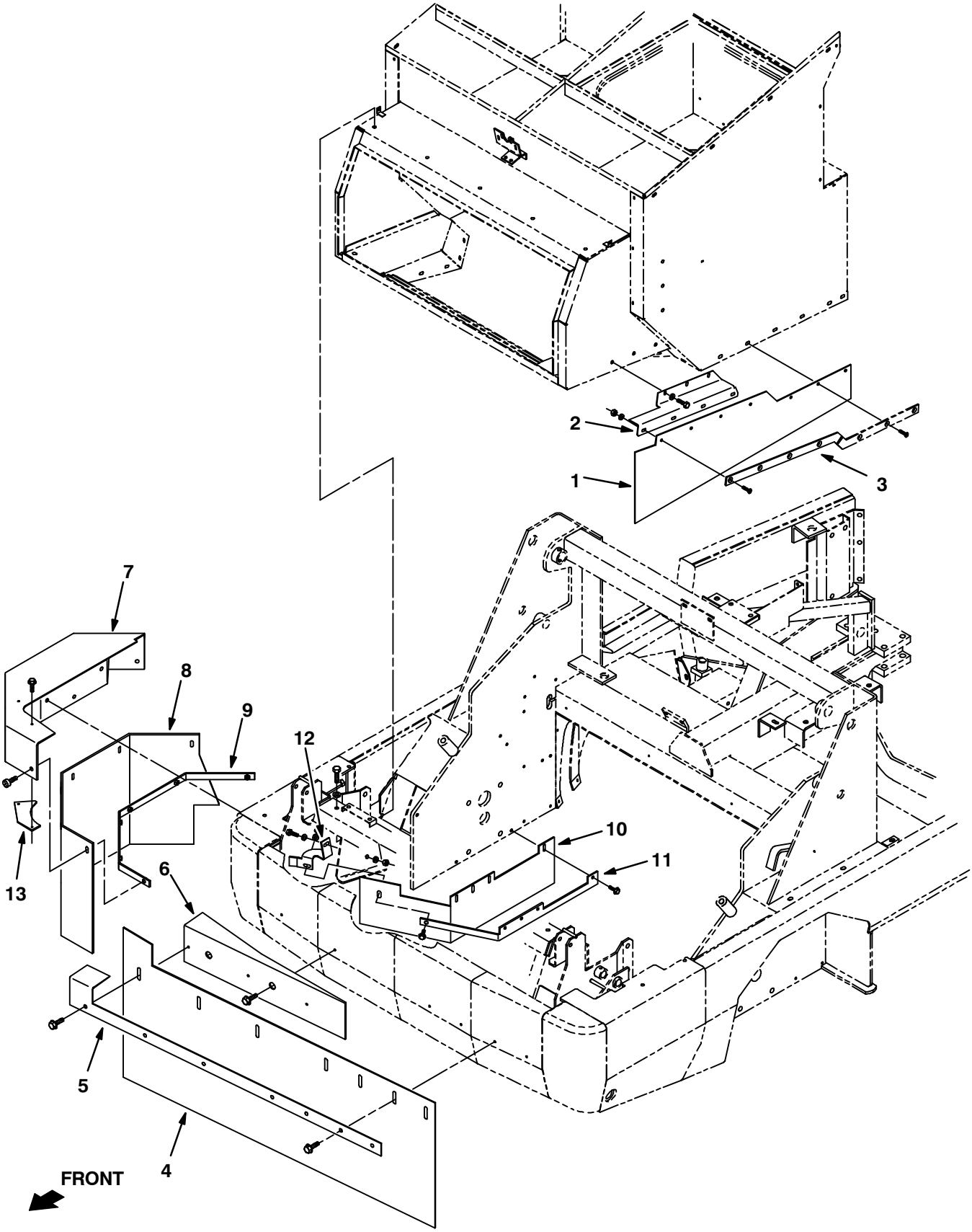

07678 – ALL

Fig. 28 – Side Brush Dust Control Kit

	Ref.	Part No.	Serial Number	Description	Qty.
▽		9012889	(008467–)	Dust Cntrl Kit, Side Brush, Ci[800lgray]	1
▲	1	76036	(008467–)	Skirt, Deflection	1
▲	2	76030	(008467–)	Bracket, Mounting, Skirt	1
▲	3	76038	(008467–)	Strip, Retainer, Skirt	1
▲	4	75901	(008467–)	Skirt, Cover, Sbdc	1
▲	5	1074310	(008467–)	Retainer, Skirt, .12, 2.0w X 54.5l	1
▲	6	1073949	(008467–)	Bracket Wldt, Mtg, Skirt, Sbdc[800 Gray]	1
▲	7	1073926	(008467–)	Plate Wldt, Skirt [Gray]	1
▲	8	76069	(008467–)	Skirt, Cover, Sbdc	1
▲	9	76055	(008467–)	Plate, Retainer	1
▲	10	76074	(008467–)	Skirt	1
▲	11	76081	(008467–)	Skirt	1
▲	12	76084	(008467–)	Bracket	1
▲	13	1073948	(008467–)	Plate, Skirt, Sbdc [800 Gray]	1

Fig. 29 – Protectoseal Fuel Tank Cap Group

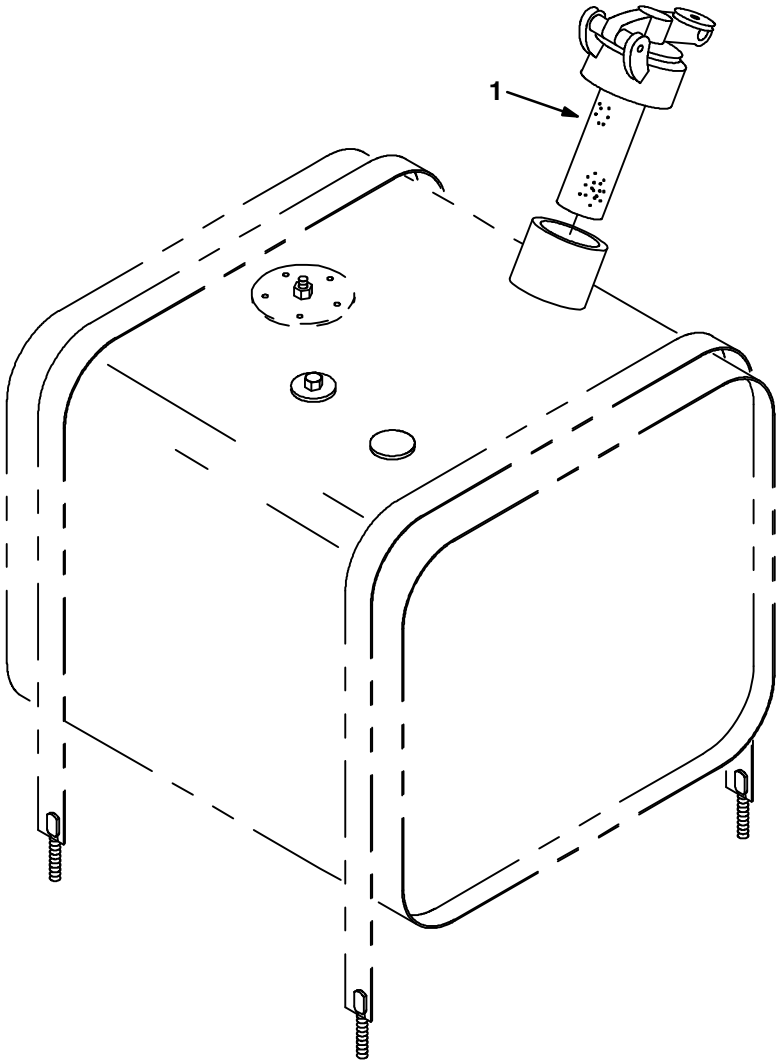

07471 – ALL

Ref.	Part No.	Serial Number	Description	Qty.
1	02506–6	(008467–)	Gas Cap, Protectoseal	1

Fig. 30 – Fire Extinguisher Kit

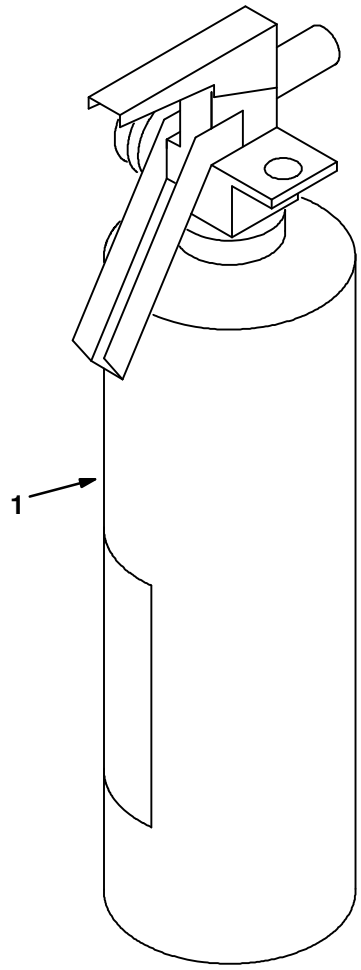

07516 – JP, NA

	Ref.	Part No.	Serial Number		Description	Qty.
▽		70692	(008467–	)	Extinguisher Kit Fire 800	1
▲	1	25312	(008467–	)	Extinguisher, Fire	

Fig. 31 – Solid Tire and Rim Assembly

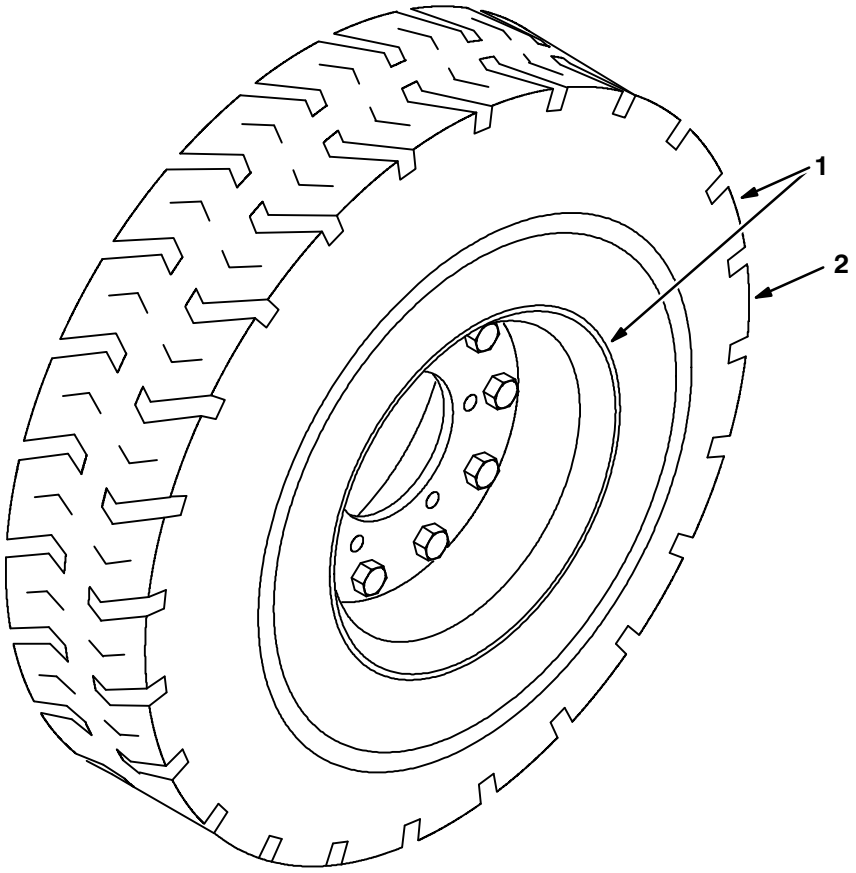

07666 – ALL

	Ref.	Part No.	Serial Number		Description	Qty.
▽	1	21671	(008467–	)	Tire and Rim Assy, Solid 6.5	1
▲	2	63228	(008467–	)	Tire, Solid	1

Fig. 32 – Seat Belt Kit

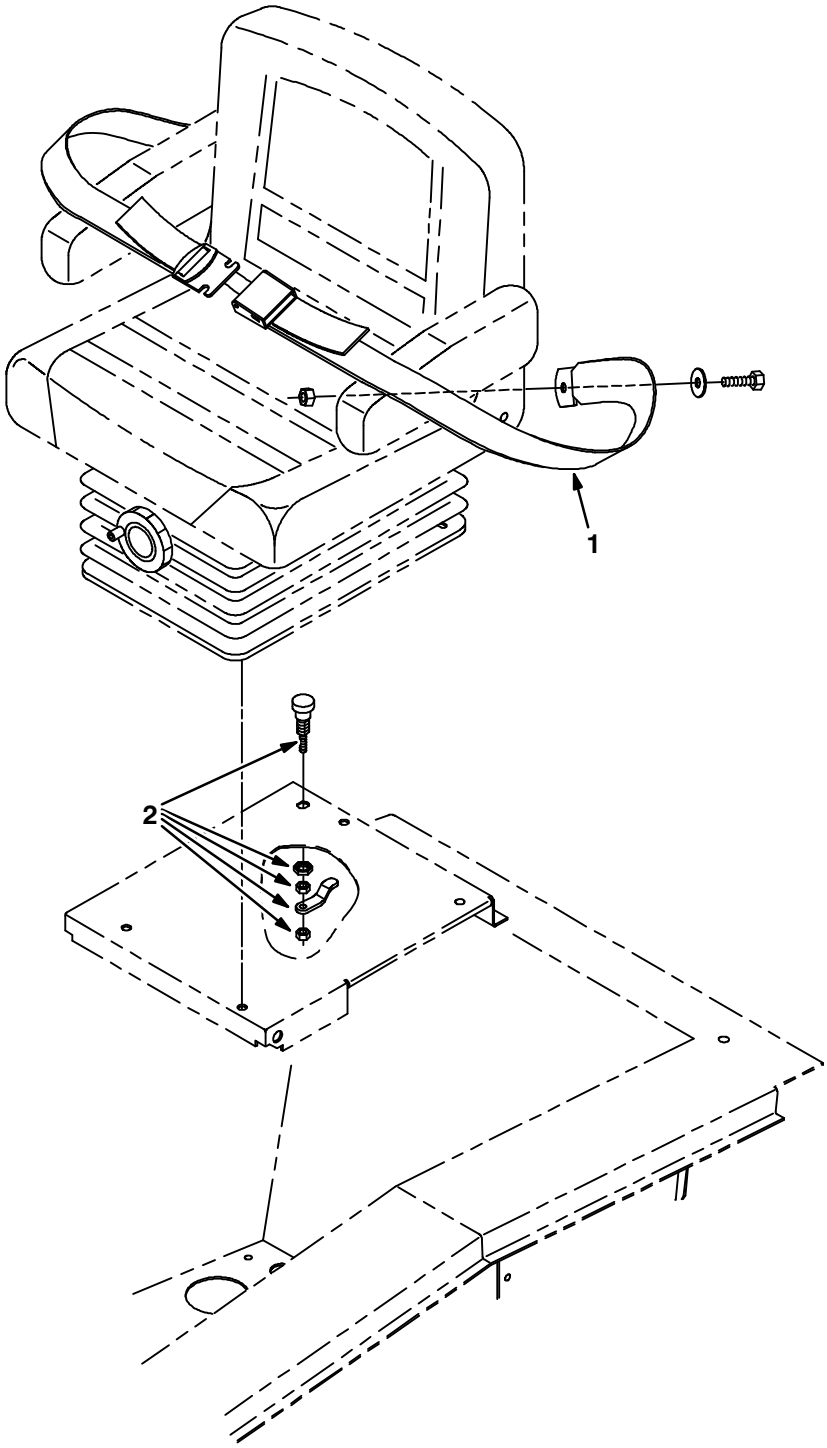

07674 – ALL

	Ref.	Part No.	Serial Number		Description	Qty.
▽		70690	(008467–	)	Seat Belt Kit	1
▲	1	30533	(008467–	)	Belt, Seat	1
▲	2	87337	(008467–	)	Latch, Door	1

Fig. 33 – RFS Filter System Group

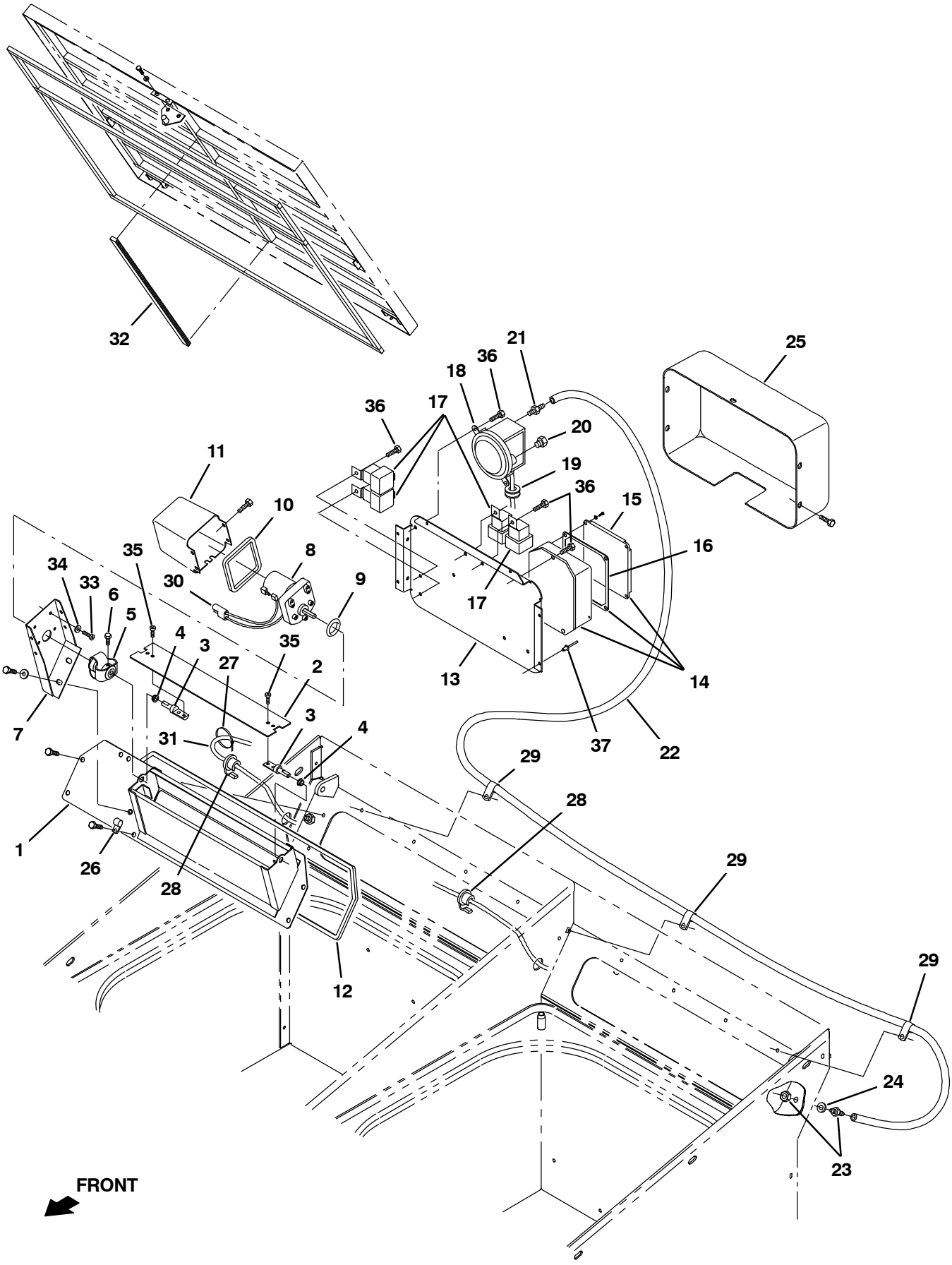

10229 – ALL

Fig. 33 – RFS Filter System Group

	Ref.	Part No.	Serial Number	Description	Qty.
▽		79174	(008467–)	Rfs Kit	1
▲	1	79160	(008467–)	Duct Wldt, Rfs	2
▲	2	79156	(008467–)	Plate, Shutter	2
▲	3	79159	(008467–)	Shaft, Pivot	4
▲	4	11747	(008467–)	Bearing, Nylon	4
▲	5	79158	(008467–)	Coupling	2
▲	6	42011	(008467–)	Screw, Hex, 10–24 X 0.50, Ss	4
▲	7	79157	(008467–)	Bracket, Mounting, Gearmotor	2
▲	8	79170	(008467–)	Motor, Ele, Geared, 12Vdc	2
▲	9	79172	(008467–)	Seal, O–Ring .787Idx.210Th	2
▲	10	79167	(008467–)	Seal	2
▲	11	79155	(008467–)	Cover, Motor	2
▲	12	79168	(008467–)	Seal	2
▲	13	79177	(008467–)	Plate, Mounting, Rfs Control	1
▲▽	14	1074764	(008467–)	Controller Assy, Rfs	1
▲▲	15	59954	(008467–)	Cover, Housing, Electrical	1
▲▲	16	59921	(008467–)	Gasket, Cover, Alum	1
▲	17	56186	(008467–)	Relay, Shrouded, 12 Vdc	4
▲	18	75465	(008467–)	Switch, Pressure	1
▲	19	10632–4	(008467–)	Grommet,Rbr,0.62Id,For .06Matl	1
▲	20	82739	(008467–)	Ftg, Breather	1
▲	21	40607	(008467–)	Ftg,Brass,St Bm03/Pm02	1
▲	22	21301	(008467–)	Hose, Vacuum, .16 Id X 76.0 Lg	1
▲	23	39923	(008467–)	Ftg,Bulkhead–Barb Wh 1074X4	1
▲	24	43454	(008467–)	Washer, .344B .69D .06Nylon	1
▲	25	79169	(008467–)	Cover, Electrical	1
▲	26	40678	(008467–)	Clamp,Cable .44D .62Wide	2
▲	27	49266	(008467–)	Tie, Cable 1.75D Max 7.50Lg	12
▲	28	34864	(008467–)	Strain,Relief	2
▲	29	46236	(008467–)	Clamp–Cable, 0.25Dia 0.56Wth	3
▲	30	79025	(008467–)	Harness, Motor, Duct	2
▲	31	79026	(008467–)	Harness, Hopper, Rfs	1
▲		83706	(008467–)	Harness, Rfs Jumper	1
▲	32	70851	(008467–)	Seal, Urethane	1
▲		44961	(008467–)	Tie, Cable 4.00 Max 14.50Lg	28
▲		23935	(008467–)	Seal, Filter	2
▲		1064188	(008467–)	Circuitbreaker, 15.0a, Resetable	2
▲	33	49766	(008467–)	Screw, Hex, #08–32 X 0.38, Ss	8
▲	34	02938	(008467–)	Washer, Lock, Int, 08 Ss	8
▲	35	06932	(008467–)	Screw, Pan, M5 X 0.80 X 10, 4.8	8
▲	36	74455	(008467–)	Screw, Hex, M6 X 1.0 X 12, Fmg	9
▲	37	34738	(008467–)	Rivet, Blind, .125d X 0.32 X .25d, Stl	6

Fig. 34 – Cab AC Drain Hose Kit

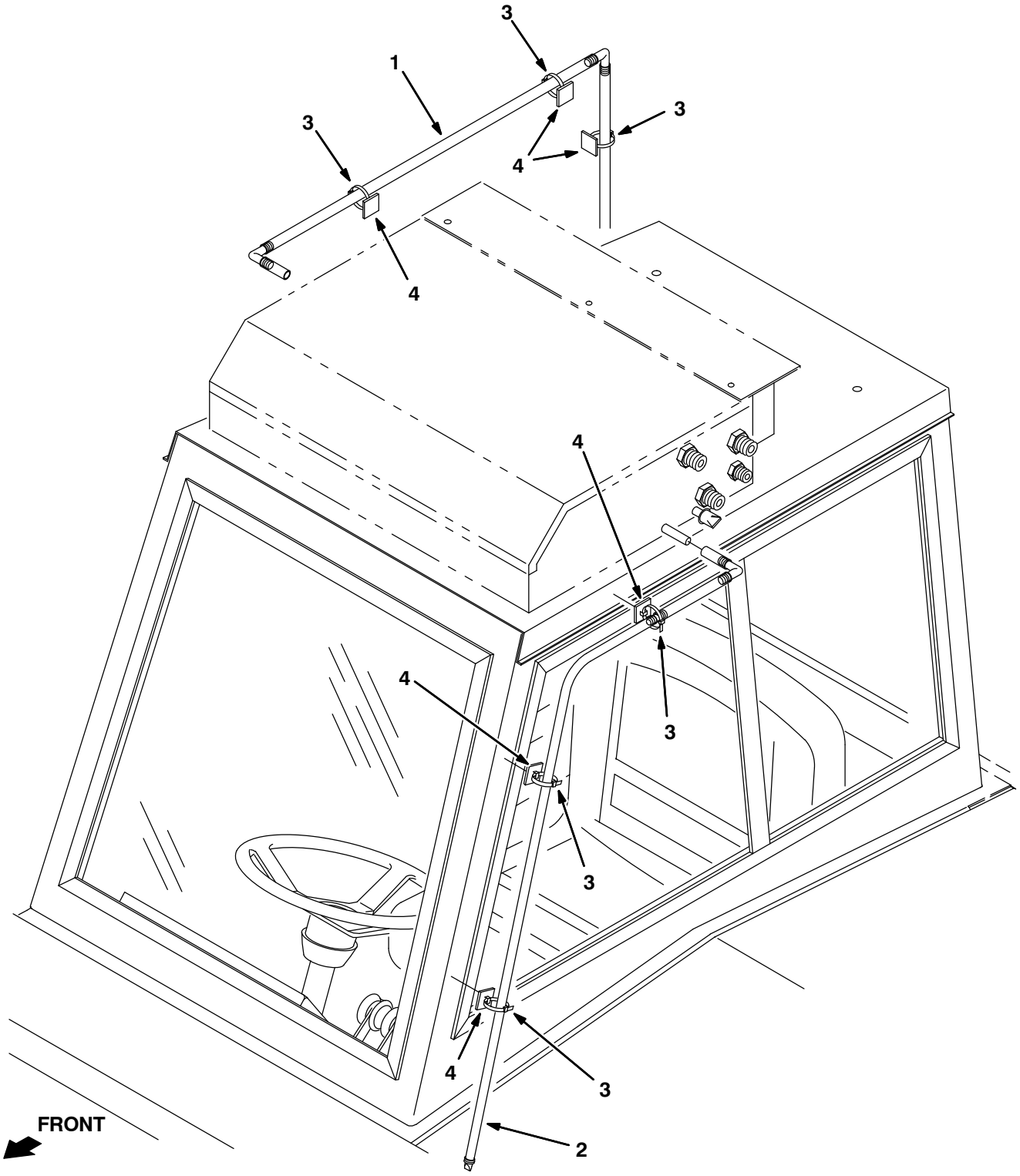

353660 – ALL

	Ref.	Part No.	Serial Number		Description	Qty.
▽		374133	(008467–	)	Kit, Ci, Drain Hose, A/C	1
▲	1	374134	(008467–	)	Hose Assy, Drain, A/C	1
▲	2	374135	(008467–	)	Hose Assy, Drain, A/C	1
▲	3	49266	(008467–	)	Tie, Cable, Nyl, 07.3l .19w 1.8 Max D	10
▲	4	55248	(008467–	)	Mount, Cable Tie	10

Fig. 35 – Neutral Start Group

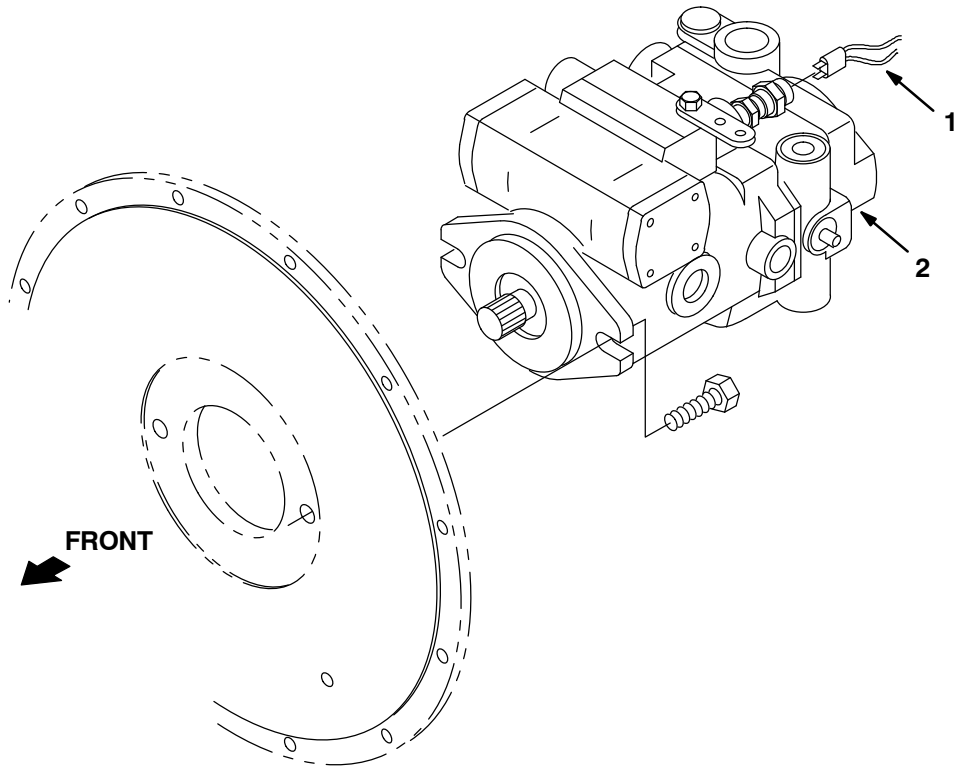

09831 – ALL

Ref.	Part No.	Serial Number	Description	Qty.
1	63407	(008467–)	Harness, Neutral, Start	1
2	373405	(008467–)	Pump, Hyd Piston V 2.48 (See breakdowns)	1

Fig. 36 – Spot Light Kit, Blue

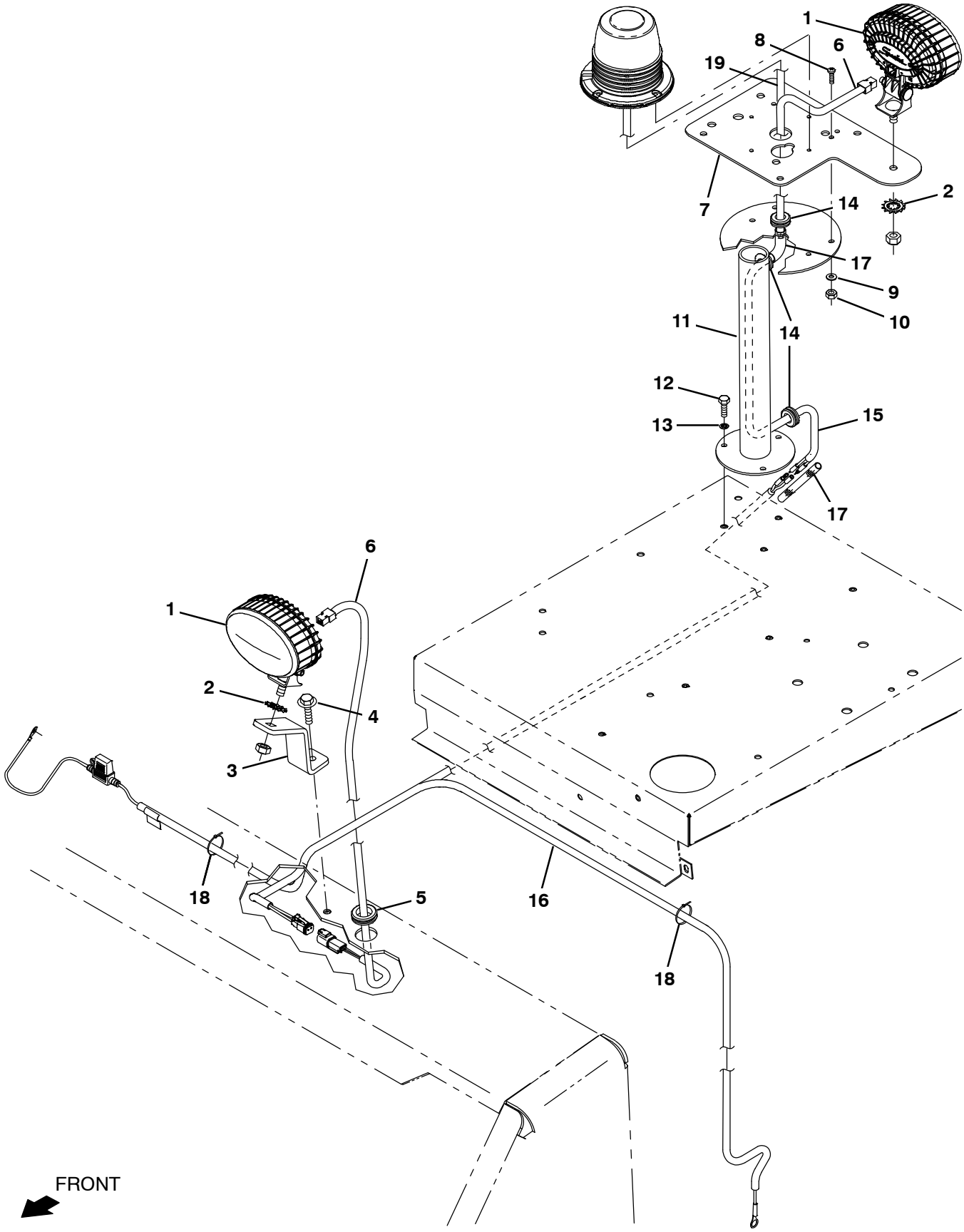

357172 – ALL

Fig. 36 – Spot Light Kit, Blue

	Ref.	Part No.	Serial Number	Description	Qty.
▽		9021372	(008467–)	Spotlight Kit, Blue, Ci [800]	1
▲	1	1240687	(008467–)	Light, Spot, Blue, Led	1
▲	2	41143	(008467–)	Washer, Lock, Int–Ext, 0.50	1
▲	3	1076786	(008467–)	Brkt, Blu Spotlight, Fr, Frame Mtg	1
▲	4	1037354	(008467–)	Screw, Hex, M8 X 1.25 X 30, 9.8, Sems	1
▲	5	10632–1	(008467–)	Grommet, Rbr, 1.06id, F/1.4h, .19 Matl	1
▲	6	1077006	(008467–)	Harness, Blu Spotlight [Light Ext]	1
▲	7	1076789	(008467–)	Brkt, Blu Spotlight, Rr, Frame Mtg	1
▲	8	24196	(008467–)	Screw, Pan, Phl, M5 X 0.80 X 20, Ss	4
▲	9	19066	(008467–)	Washer, Flat, 0.25b 0.56d .05, Pl, 10	4
▲	10	09739	(008467–)	Nut, Hex, Lock, M5 X 0.80, Nl, Ss	4
▲	11	31954	(008467–)	Pedestal Wldt, Light	1
▲	12	06943	(008467–)	Screw, Hex, M6 X 1.00 X 20, 8.8	3
▲	13	32982	(008467–)	Washer, Lock, Int, 0.25	3
▲	14	10632–9	(008467–)	Grommet, Rbr, 0.63id, F/0.8h, .12 Matl	3
▲	15	1077010	(008467–)	Harness, Blue Spotlight Kits [800]	1
▲	16	1077007	(008467–)	Harness, Blu Spotlight [Light Ext]	1
▲	17	1063998	(008467–)	Sleeve, Afmkt, Vyl, 0.325id, 01ft	1
▲	18	763114	(008467–)	Tie, Cable, 11.3l, 2.75d Max	1
▲	19	1077005	(008467–)	Harness, Blu Spotlight [Pwr Hub] (For Machines W/ Low Strobe Light Kit)	1

Fig. 37 – Documentation Group (Online Only)

G, LP

Ref.	Part No.	Serial Number	Description	Qty.
	9016586	(008467–)	Manual, Parts [M800 Gas/Lp, Na Sn 8467–]	1
	9016579	(008467–)	Manual, Oprtr, [800 G/Lp, En, Na 8467–]	1
	MM337	(008467–)	Manual, Service 800/810	1
	9016584	(008467–)	Manual, Oprtr, [800 G/Lp Es, Na, 8467–]	1
	9016583	(008467–)	Manual, Oprtr, [800 G/Lp Fr, Na, 8467–]	1
	1052092	(008467–)	Video, Oprtr, Training, Dvd [800]	1

To view, print, or download the latest Parts manual, other language Operator manuals, and Use and Care Guides (wall charts), visit:

www.tennantco.com/manual

SECTION 4

Contents **Page**

Fig. 1 – Hydraulic Piston Pump Breakdown, 373404 4-2
Fig. 2 – Hydraulic Piston Pump Breakdown, 373404 4-4
Fig. 3 – Hydraulic Manual Control Breakdown, 74273 4-6
Fig. 4 – Hydraulic Piston Pump Breakdown, 373405 4-8
Fig. 5 – Hydraulic Piston Pump Breakdown, 373405 4-10
Fig. 6 – Hydraulic Manual Control Breakdown, 373369 4-12
Fig. 7 – Hydraulic Gear Pump Breakdown, 373254 4-14
Fig. 8 – Hydraulic Motor Breakdown, 19117 . . . 4-16
Fig. 9 – Hydraulic Motor Breakdown, 63542 . . . 4-17
Fig. 10 – Hydraulic Steering Valve Breakdown, 65242 4-18
Fig. 11 – Hydraulic Valve Breakdown, 375563 . . 4-20
Fig. 12 – Cab Assembly 4-22
Fig. 13 – Cab Door Assembly 4-24
Fig. 14 – Cab Insulation Group 4-26
Fig. 15 – Cab Wire Harness Group 4-28
Fig. 16 – AC Condenser Box Breakdown, 9012898 4-29
Fig. 17 – AC and Heater Box Breakdown, 1073904 4-30
Fig. 18 – Heater Box Breakdown, 1073905 4-32
Fig. 19 – Brake Assy, Right Hand (R.H.) 77790 . 4-34
Fig. 20 – Brake Assy, Left Hand (L.H.) 77770 . . 4-36
Fig. 21 – Hydraulic Solenoid Valve Breakdown, 1049210 4-38
Fig. 22 – Hydraulic Solenoid Valve Breakdown, 1237091 4-39
Fig. 23 – Hydraulic Solenoid Valve Breakdown, 1049209 4-40
Fig. 24 – Hydraulic Solenoid Valve Breakdown, 1237090 4-42
Fig. 25 – Hydraulic Solenoid Valve Breakdown, 1049211 4-44
Fig. 26 – Hydraulic Solenoid Valve Breakdown, 1237092 4-45
Fig. 27 – Hydraulic Cylinder Breakdown, 1026719 4-46

Fig. 1 – Hydraulic Piston Pump Breakdown, 373404

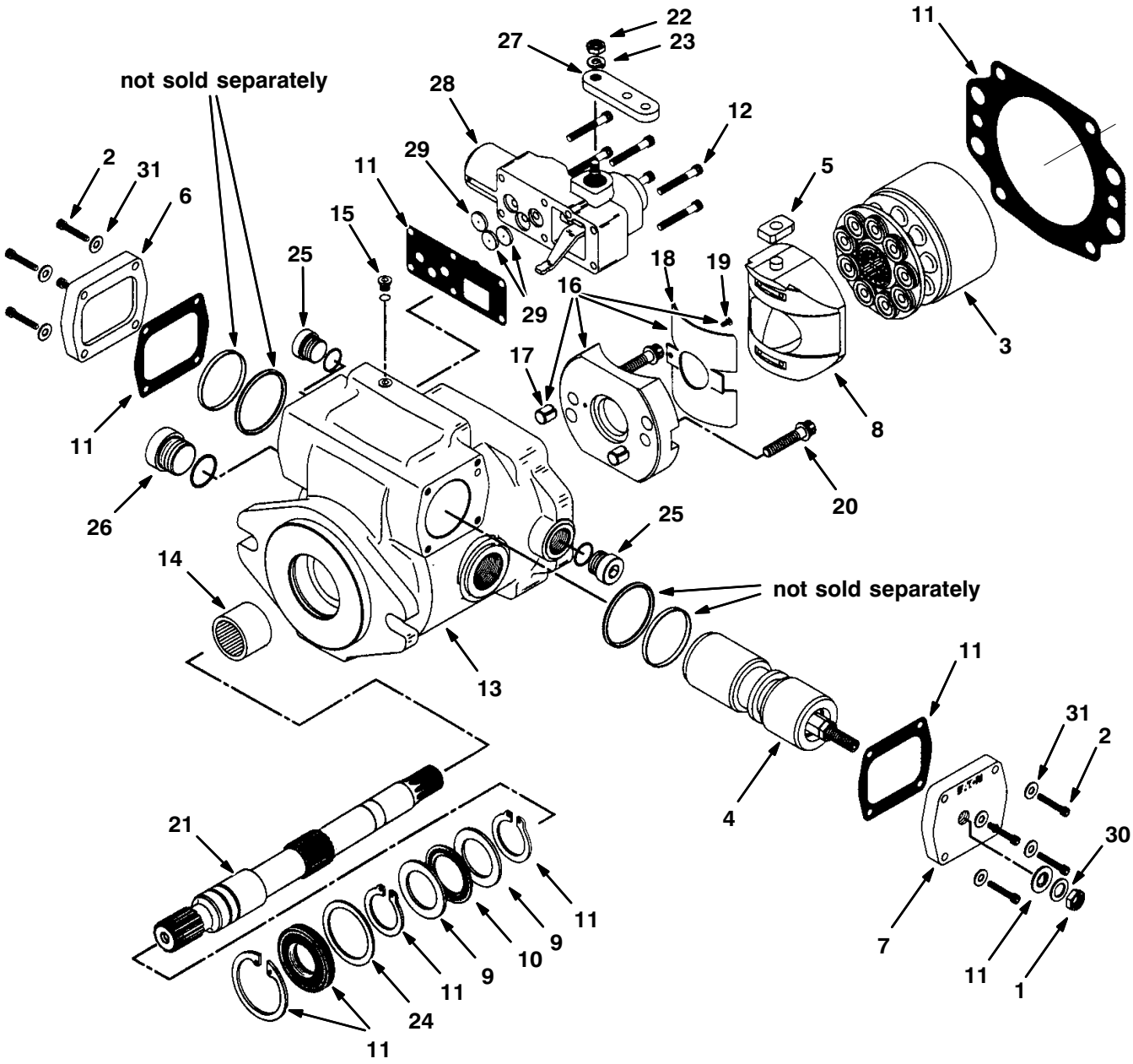

10136 – ALL

Fig. 1 – Hydraulic Piston Pump Breakdown, 373404

NOTE: Piston Pump, TENNANT Part Number 373404, includes.Fig. 1, Fig. 2 and Fig. 3.

	Ref.	Part No.	Serial Number	Description	Qty.
	1	74184	(008467–)	Nut, Jam	1
	2	74223	(008467–)	Screw, Cap	8
	3	61882	(008467–)	Rotating Kit	1
	4	373407	(008467–)	Piston, Servo	1
	5	74254	(008467–)	Follower, Piston	1
	6	74256	(008467–)	Plate, Cover En	1
	7	74257	(008467–)	Plate, Cover En	1
	8	74258	(008467–)	Camplate S/A En	1
	9	74240	(008467–)	Race, Bearing Ce	2
	10	74210	(008467–)	Bearing	1
	11	74283	(008467–)	Seal Kit, Pump En	1
	12	74262	(008467–)	Screw, Cap En	6
▽		373408	(008467–)	Housing S/A En	1
▲	13	373409	(008467–)	Housing En	1
▲	14	37462	(008467–)	Bearing	1
▲	15	79742	(008467–)	Plug S/A En	1
▽	16	373410	(008467–)	Cradle Sub Assy En	1
▲	17	373218	(008467–)	Dowel Bushing En	2
▲	18	373414	(008467–)	Bushing En	1
▲	19	373415	(008467–)	Cap Screw En	1
	20	79747	(008467–)	Cap Screw En	2
	21	74265	(008467–)	Shaft, Drive Sp En	1
	22	74266	(008467–)	Nut En	1
	23	74267	(008467–)	Lockwasher En	1
	24	37460	(008467–)	Washer	1
	25	13907	(008467–)	Plug #8	2
	26	79779	(008467–)	Plug,#12 O–Ring Ph	1
	27	74272	(008467–)	Arm, Control En	1
	28	74273	(008467–)	Control, Manual (See Breakdowns)	1
	29	74276	(008467–)	Orifice, Valve En	3
	30	74280	(008467–)	Washer En	1
	31	74281	(008467–)	Washer En	8

Fig. 2 – Hydraulic Piston Pump Breakdown, 373404

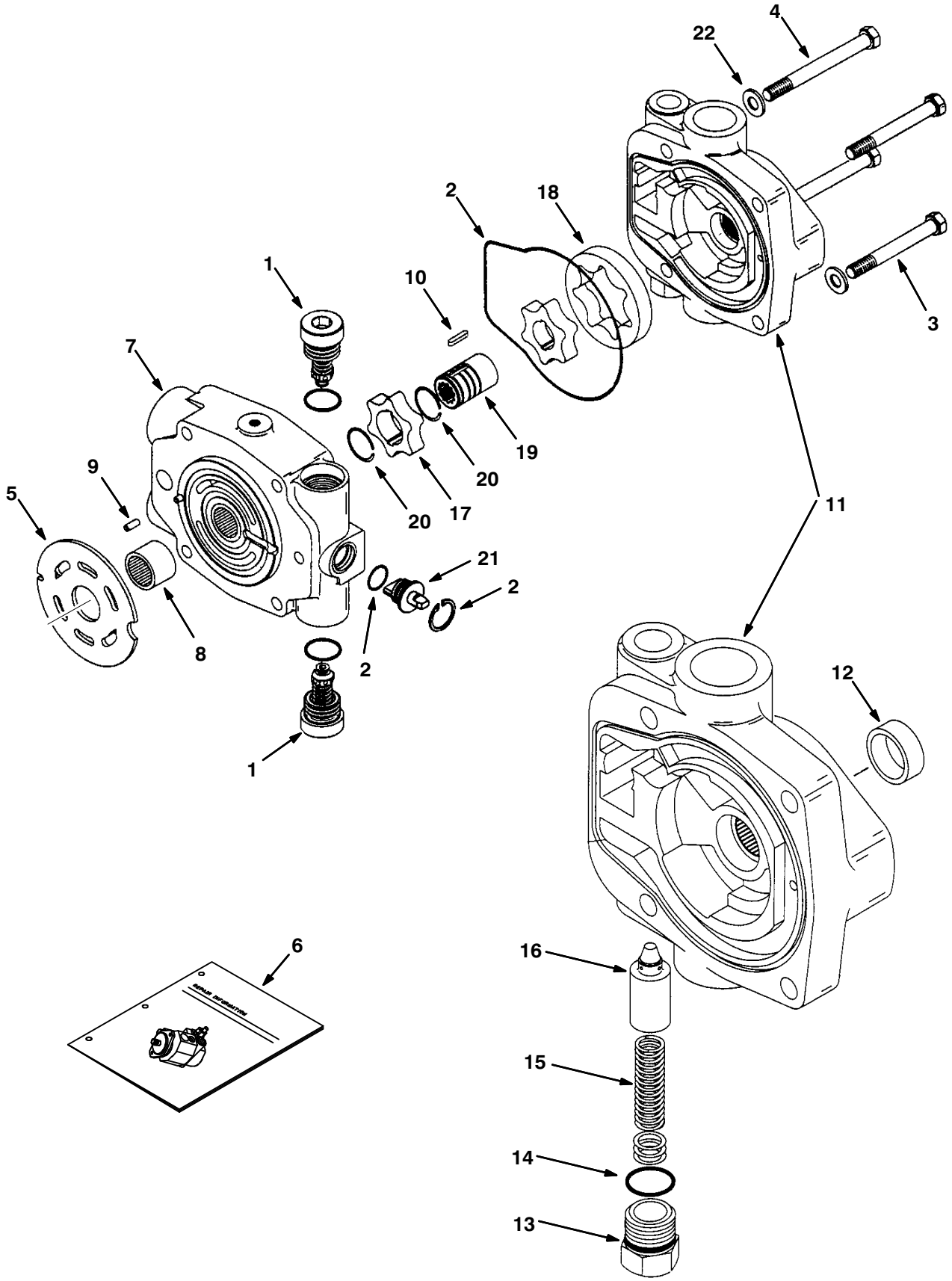

10136,09670 – ALL

Fig. 2 – Hydraulic Piston Pump Breakdown, 373404

NOTE: Piston Pump, TENNANT Part Number 373404, includes .Fig. 1, Fig. 2 and Fig. 3.

	Ref.	Part No.	Serial Number		Description	Qty.
	1	74259	(008467–	)	Relief Valve Sa En	2
	2	74283	(008467–	)	Seal Kit, Pump En	1
	3	373374	(008467–	)	Screw, Cap En	2
	4	373375	(008467–	)	Screw, Cap En	2
	5	61886	(008467–	)	Valve Plate	1
	6	373406	(008467–	)	Repair Info,Pmp En	1
▽	7	373412	(008467–	)	Backplate S/A En	1
▲	8	34159	(008467–	)	Bearing	1
▲	9	79748	(008467–	)	Roll Pin En	1
	10	74270	(008467–	)	Key En	1
▽	11	74271	(008467–	)	Charge Pmp Adap En	1
▲	12	79749	(008467–	)	Bushing En	1
▲	13	79750	(008467–	)	Plug En	1
▲	14	79751	(008467–	)	Shims En	1
▲	15	79752	(008467–	)	Spring En	1
▲	16	79753	(008467–	)	Poppet En	1
	17	74274	(008467–	)	Geroter,Ring In En	1
	18	74275	(008467–	)	Geroter,Ring Ot En	1
	19	74277	(008467–	)	Coupler En	1
	20	74278	(008467–	)	Ring, Retaining En	2
	21	373413	(008467–	)	Actuator, Valve En	1
	22	74282	(008467–	)	Washer En	4

Fig. 3 – Hydraulic Manual Control Breakdown, 74273

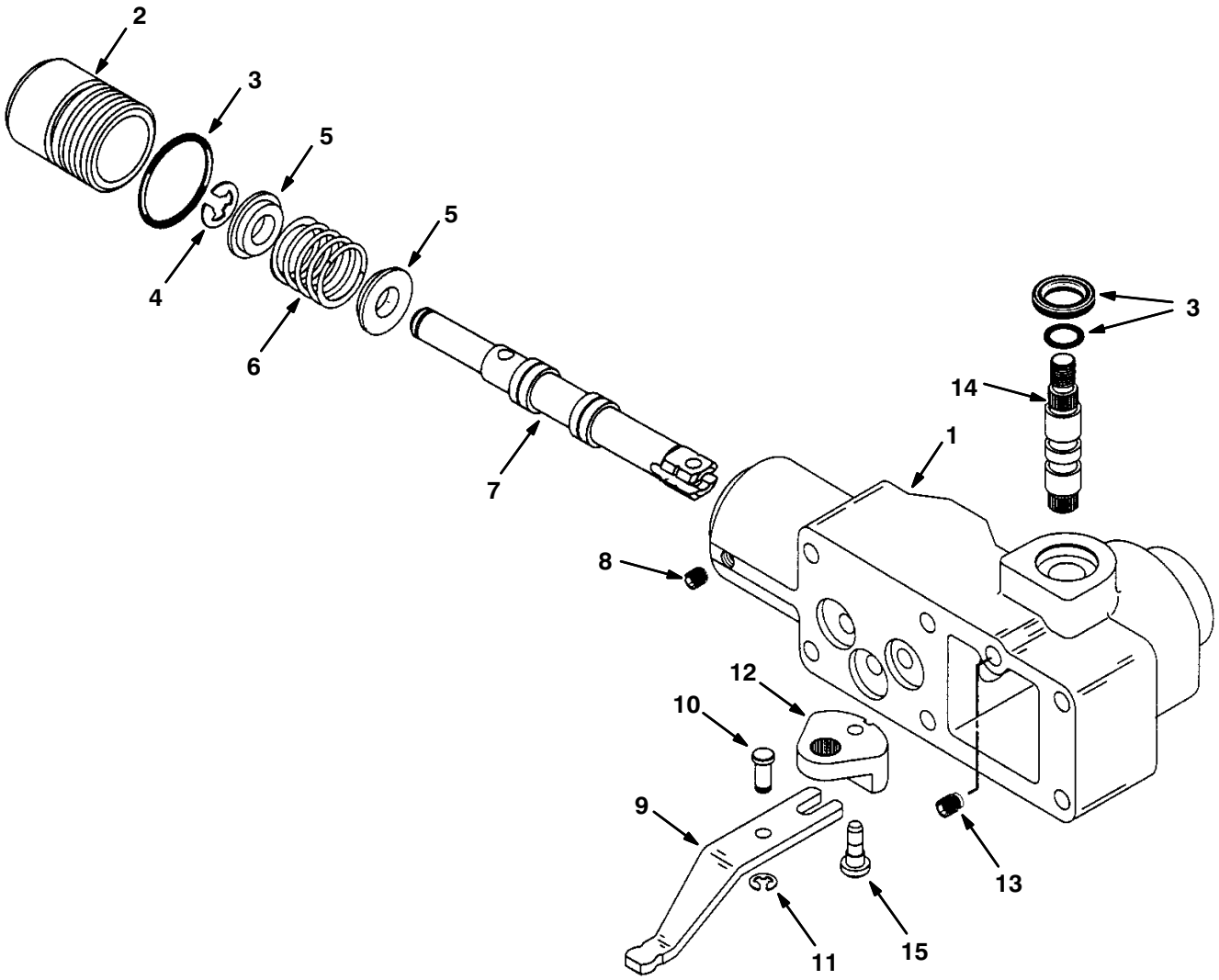

10134 – ALL

Fig. 3 – Hydraulic Manual Control Breakdown, 74273

NOTE: Piston Pump, TENNANT Part Number 373404, includes .Fig. 1, Fig. 2 and Fig. 3.

	Ref.	Part No.	Serial Number	Description	Qty.
▽		74273	(008467–)	Control, Manual	1
▲	1	79754	(008467–)	Housing,Control	1
▲	2	79755	(008467–)	Plug	1
▲	3	79776	(008467–)	Seal Kit,Cntrl	1
▲	4	79756	(008467–)	Ring, Retaining	1
▲	5	79757	(008467–)	Spring,Retainer	2
▲	6	79758	(008467–)	Spring, Cntr	1
▲	7	79759	(008467–)	Valve Spool	1
▲	8	79760	(008467–)	Screw, Set	1
▲	9	79761	(008467–)	Link, Feedback	1
▲	10	79762	(008467–)	Dowel Pin	1
▲	11	79763	(008467–)	Ring, Retaining	1
▲	12	79764	(008467–)	Bell Crank	1
▲	13	79765	(008467–)	Screw, Set	1
▲	14	79766	(008467–)	Shaft, Input	1
▲	15	79767	(008467–)	Pin, Headed	1

Fig. 4 – Hydraulic Piston Pump Breakdown, 373405

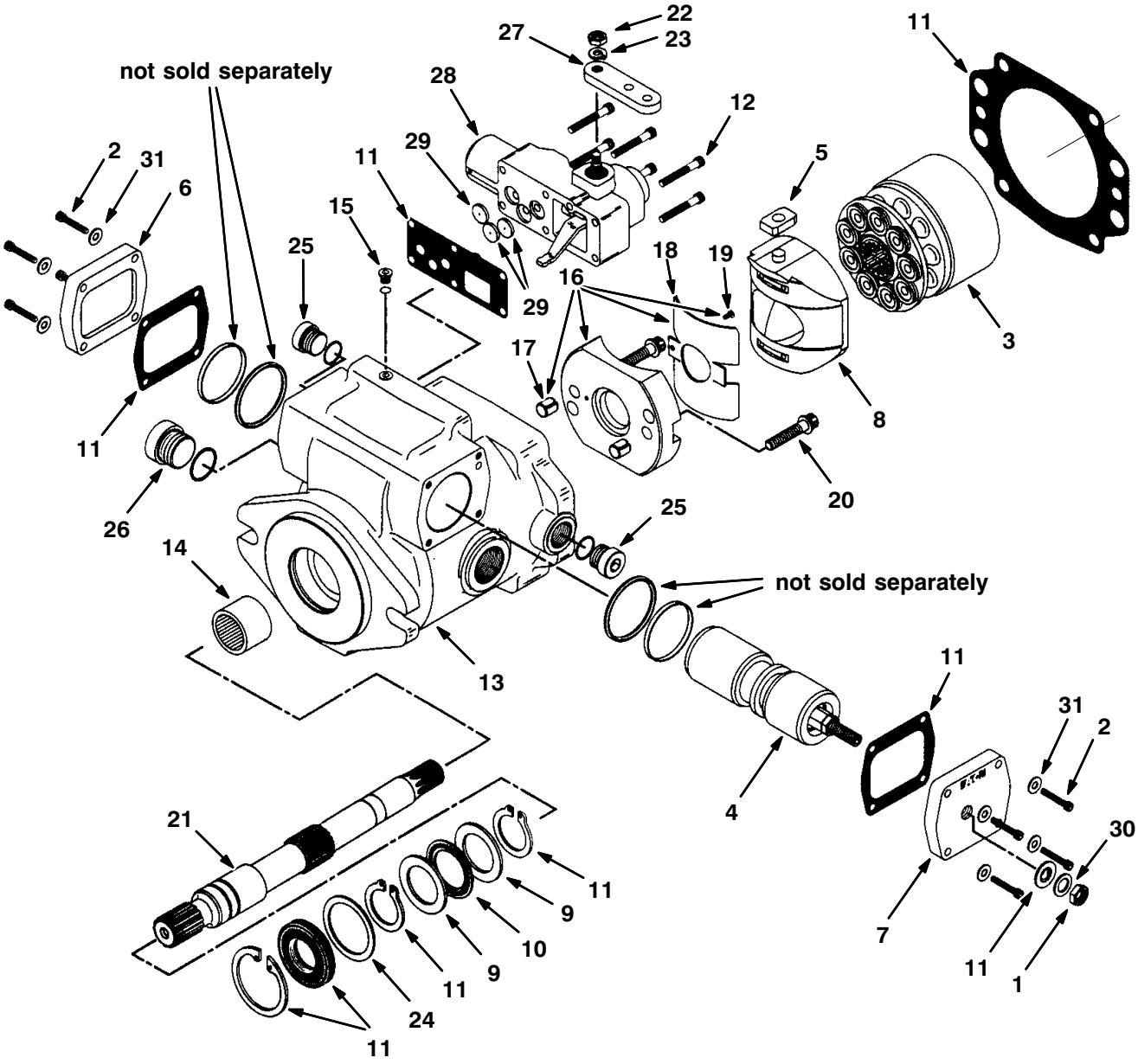

10136 – ALL

Fig. 4 – Hydraulic Piston Pump Breakdown, 373405

NOTE: Piston Pump, TENNANT Part Number 373405, includes Fig. 4, Fig. 5 and Fig. 6.

	Ref.	Part No.	Serial Number	Description	Qty.
	1	74184	(008467–)	Nut, Jam	1
	2	74223	(008467–)	Screw, Cap	8
	3	61882	(008467–)	Rotating Kit	1
	4	373407	(008467–)	Piston, Servo	1
	5	74254	(008467–)	Follower, Piston	1
	6	74256	(008467–)	Plate, Cover En	1
	7	74257	(008467–)	Plate, Cover En	1
	8	74258	(008467–)	Camplate S/A En	1
	9	74240	(008467–)	Race, Bearing Ce	2
	10	74210	(008467–)	Bearing	1
	11	74283	(008467–)	Seal Kit, Pump En	1
	12	74262	(008467–)	Screw, Cap En	6
▽		373408	(008467–)	Housing S/A En	1
▲	13	373409	(008467–)	Housing En	1
▲	14	37462	(008467–)	Bearing	1
▲	15	79742	(008467–)	Plug S/A En	1
▽	16	373410	(008467–)	Cradle Sub Assy En	1
▲	17	373218	(008467–)	Dowel Bushing En	2
▲	18	373414	(008467–)	Bushing En	1
▲	19	373415	(008467–)	Cap Screw En	1
	20	79747	(008467–)	Cap Screw En	2
	21	74265	(008467–)	Shaft, Drive Sp En	1
	22	74266	(008467–)	Nut En	1
	23	74267	(008467–)	Lockwasher En	1
	24	37460	(008467–)	Washer	1
	25	13907	(008467–)	Plug #8	2
	26	79779	(008467–)	Plug,#12 O–Ring Ph	1
	27	74272	(008467–)	Arm, Control En	1
	28	373369	(008467–)	Control, Manual (See Breakdowns)	1
	29	74276	(008467–)	Orifice, Valve En	3
	30	74280	(008467–)	Washer En	1
	31	74281	(008467–)	Washer En	8

Fig. 5 – Hydraulic Piston Pump Breakdown, 373405

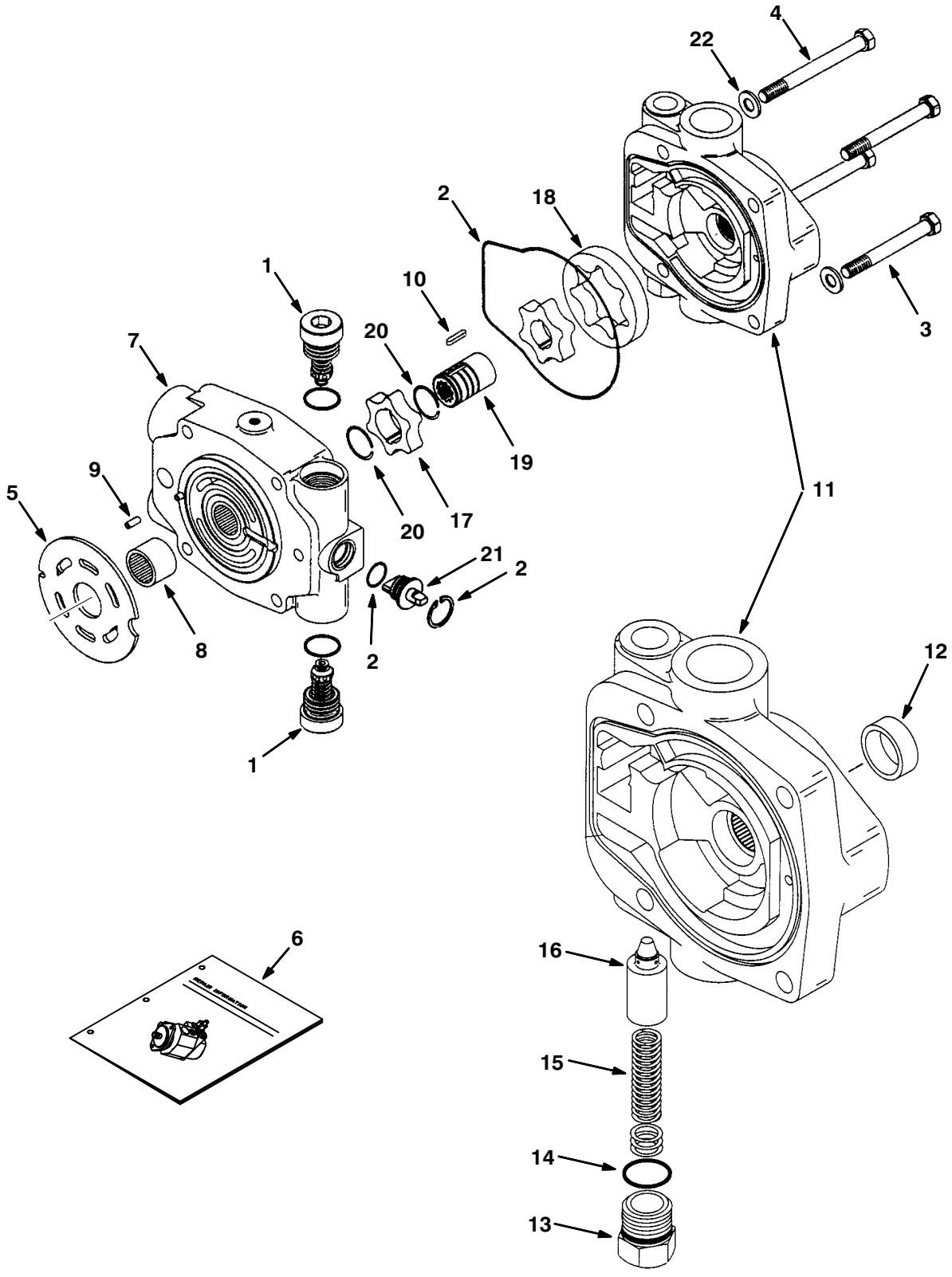

10136,09670 – ALL

Fig. 5 – Hydraulic Piston Pump Breakdown, 373405

NOTE: Piston Pump, TENNANT Part Number 373405, includes Fig. 4, Fig. 5 and Fig. 6.

	Ref.	Part No.	Serial Number	Description	Qty.
	1	74259	(008467–)	Relief Valve Sa En	2
	2	74283	(008467–)	Seal Kit, Pump En	1
	3	373374	(008467–)	Screw, Cap En	2
	4	373375	(008467–)	Screw, Cap En	2
	5	61886	(008467–)	Valve Plate	1
	6	373406	(008467–)	Repair Info,Pmp En	1
▽	7	373412	(008467–)	Backplate S/A En	1
▲	8	34159	(008467–)	Bearing	1
▲	9	79748	(008467–)	Roll Pin En	1
	10	74270	(008467–)	Key En	1
▽	11	74271	(008467–)	Charge Pmp Adap En	1
▲	12	79749	(008467–)	Bushing En	1
▲	13	79750	(008467–)	Plug En	1
▲	14	79751	(008467–)	Shims En	1
▲	15	79752	(008467–)	Spring En	1
▲	16	79753	(008467–)	Poppet En	1
	17	74274	(008467–)	Geroter,Ring In En	1
	18	74275	(008467–)	Geroter,Ring Ot En	1
	19	74277	(008467–)	Coupler En	1
	20	74278	(008467–)	Ring, Retaining En	2
	21	373413	(008467–)	Actuator, Valve En	1
	22	74282	(008467–)	Washer En	4

Fig. 6 – Hydraulic Manual Control Breakdown, 373369

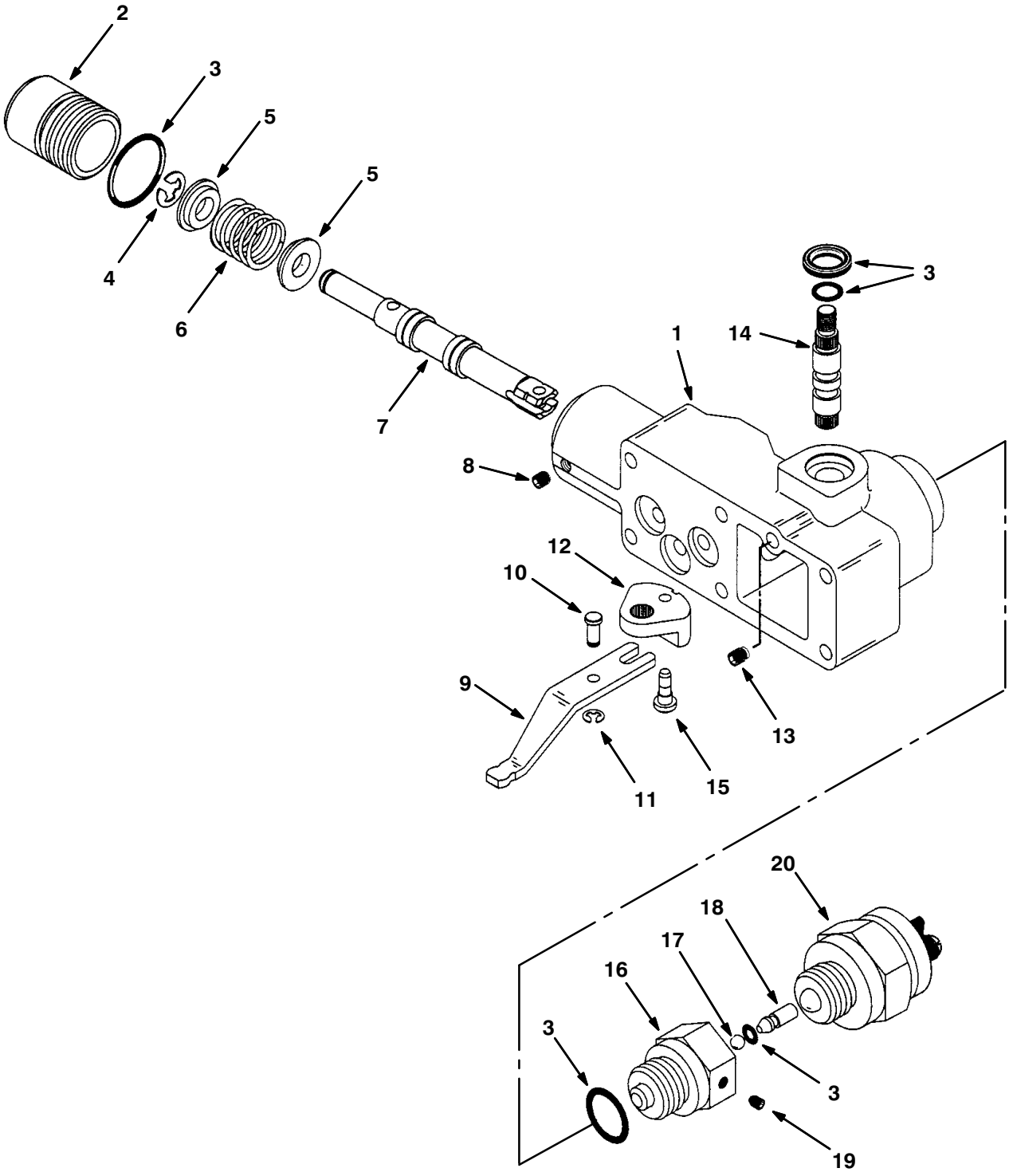

10139 – ALL

Fig. 6 – Hydraulic Manual Control Breakdown, 373369

NOTE: Piston Pump, TENNANT Part Number 373405, includes Fig. 4, Fig. 5 and Fig. 6.

	Ref.	Part No.	Serial Number	Description	Qty.
▽		373369	(008467–)	Manual Control En	1
▲	1	79777	(008467–)	Housing,Control En	1
▲	2	79755	(008467–)	Plug En	1
▲	3	79776	(008467–)	Seal Kit,Cntrl En	1
▲	4	79756	(008467–)	Ring, Retaining En	1
▲	5	79757	(008467–)	Spring,Retainer En	2
▲	6	79758	(008467–)	Spring, Cntr En	1
▲	7	79772	(008467–)	Vlv Spool Wide En	1
▲	8	79760	(008467–)	Screw, Set En	1
▲	9	79761	(008467–)	Link, Feedback En	1
▲	10	79762	(008467–)	Dowel Pin En	1
▲	11	79763	(008467–)	Ring, Retaining En	1
▲	12	79764	(008467–)	Bell Crank En	1
▲	13	79765	(008467–)	Screw, Set En	1
▲	14	79766	(008467–)	Shaft, Input En	1
▲	15	79767	(008467–)	Pin, Headed En	1
▲	16	373371	(008467–)	Adaptor,Neutral En	1
▲	17	79774	(008467–)	Ball En	1
▲	18	373372	(008467–)	Pin, Cntrl Assy En	1
▲	19	79760	(008467–)	Screw, Set En	1
▲	20	373373	(008467–)	Switch,Lockout En	1

Fig. 7 – Hydraulic Gear Pump Breakdown, 373254

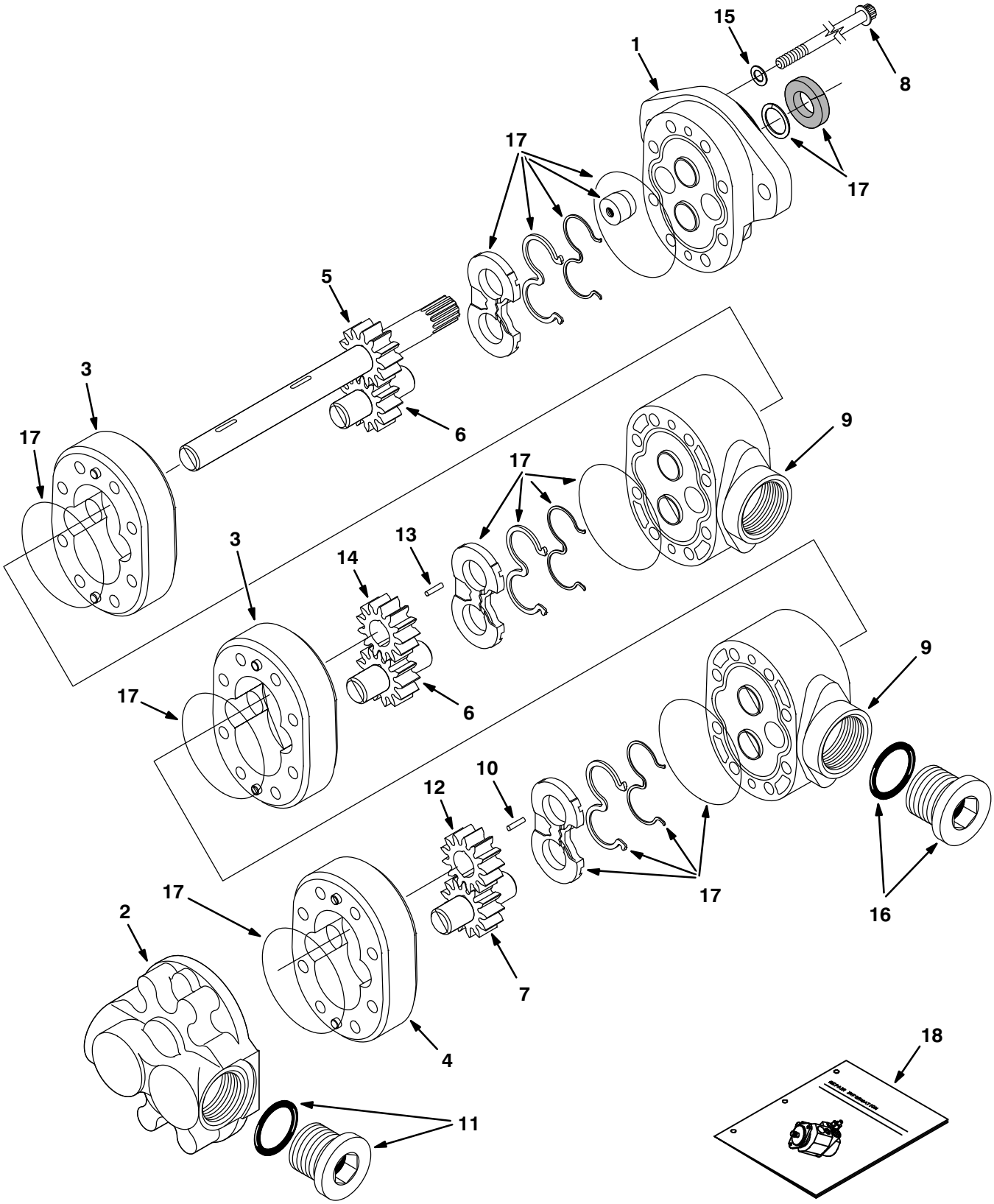

09670 – All

Fig. 7 – Hydraulic Gear Pump Breakdown, 373254

	Ref.	Part No.	Serial Number	Description	Qty.
▽		373254	(008467–)	Pump, Hyd, Gear, [Ex3] 0.66 [R] 3000	1
▲	1	373201	(008467–)	Plate, Front, Pump, Hyd	1
▲	2	373276	(008467–)	Plate, Back, Pump, Hyd	1
▲	3	373232	(008467–)	Housing	1
▲	4	373256	(008467–)	Body	2
▲	5	373457	(008467–)	Gear, Drive	1
▲	6	373211	(008467–)	Gear Assy, Idler	1
▲	7	373258	(008467–)	Gear, Idler	2
▲	8	74154	(008467–)	Screw, Cap, Motor, Hyd	8
▲	9	373235	(008467–)	Plate, Adaptor	2
▲	10	373458	(008467–)	Key	1
▲	11	71725	(008467–)	Plug, O–Ring	1
▲	12	373259	(008467–)	Gear, [Slip Fit]	1
▲	13	373284	(008467–)	Key	1
▲	14	373242	(008467–)	Gear	1
▲	15	373243	(008467–)	Washer	4
▲	16	74161	(008467–)	Plug, O–Ring	1
▲	17	373255	(008467–)	Kit, Seal, Pump	1
	18	373207	(008467–)	Instr, Kit, Repair, Pump, Hyd	1

Fig. 8 – Hydraulic Motor Breakdown, 19117

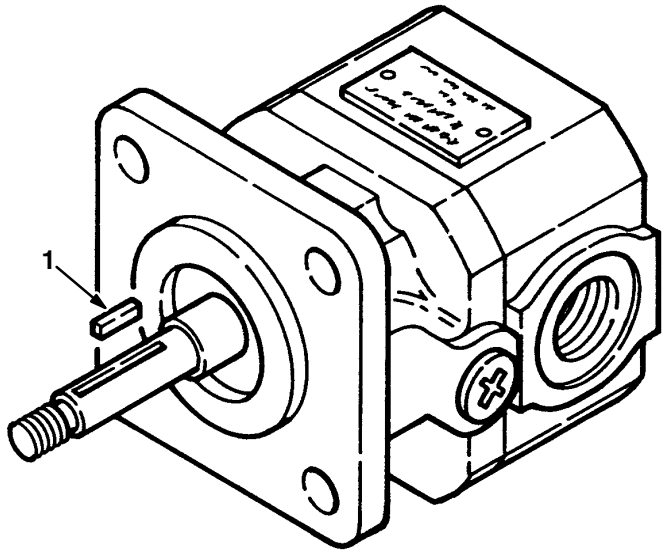

05190 – ALL

	Ref.	Part No.	Serial Number		Description	Qty.
▽		19117	(008467–	)	Motor, Hydraulic	1
▲	1	00954	(008467–	)	Key	1
▲		74233	(008467–	)	Seal Kit	1

Fig. 9 – Hydraulic Motor Breakdown, 63542

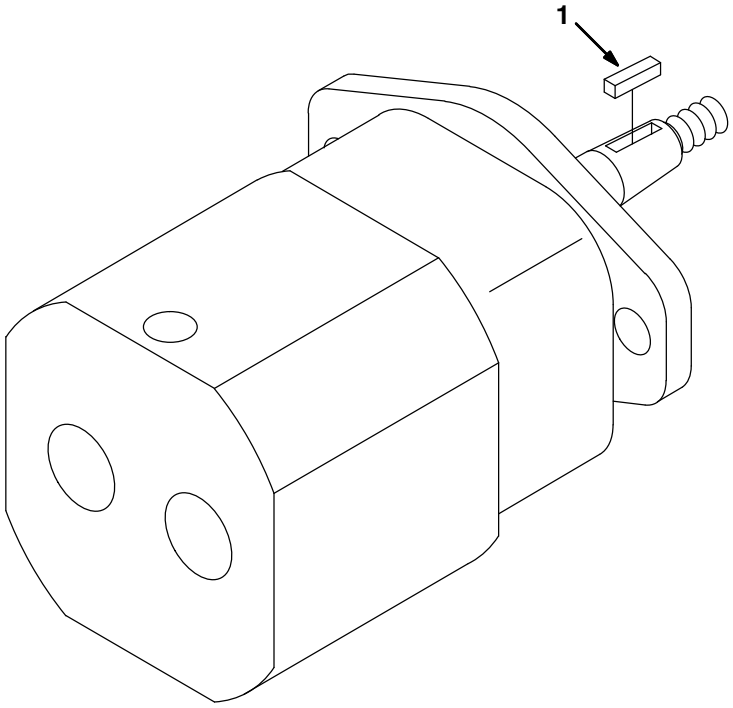

10556 – ALL

	Ref.	Part No.	Serial Number		Description	Qty.
▽		63542	(008467–	)	Motor, Hydraulic	1
▲	1	00960	(008467–	)	Key, Square 0.12 0.12 00.50 LG	1
▲		74233	(008467–	)	Seal Kit, Hyd Mtr Gear	1

Fig. 10 – Hydraulic Steering Valve Breakdown, 65242

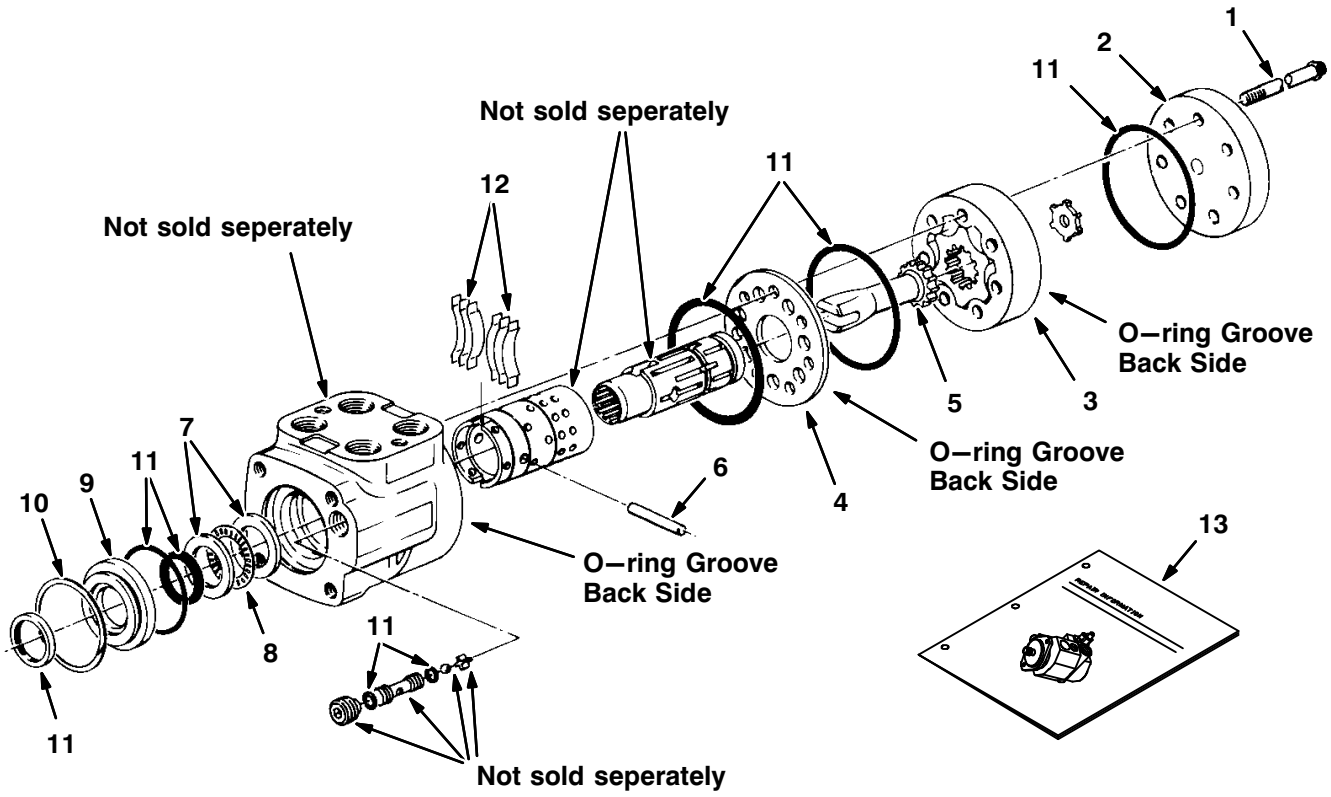

09936–09670–ALL

Fig. 10 – Hydraulic Steering Valve Breakdown, 65242

	Ref.	Part No.	Serial Number	Description	Qty.
▽		65242	(008467–)	Steer Control Hyd#4 04.5 1300	1
▲	1	74174	(008467–)	Cap, Screw	6
▲	2	74194	(008467–)	Cap, End	1
▲	3	65235	(008467–)	Gerotor Set Cl	1
▲	4	74182	(008467–)	Plate, Wear	1
▲	5	58596	(008467–)	Drive	1
▲	6	74218	(008467–)	Pin	1
▲	7	74109	(008467–)	Race, Bearing	2
▲	8	74110	(008467–)	Bearing, Needle	1
▲	9	74112	(008467–)	Bushing, Seal	1
▲	10	74111	(008467–)	Ring, Retainer	1
▲	11	74190	(008467–)	Seal Kit, Scu	1
▲	12	74195	(008467–)	Spring Kit	1
	13	74251	(008467–)	Repair Info,Scu Cl	1

Fig. 11 – Hydraulic Valve Breakdown, 375563

CONTROL VALVE	
Spool #1	Hopper Lift
Spool #2	Hopper Dump
Spool #3	Hopper Door

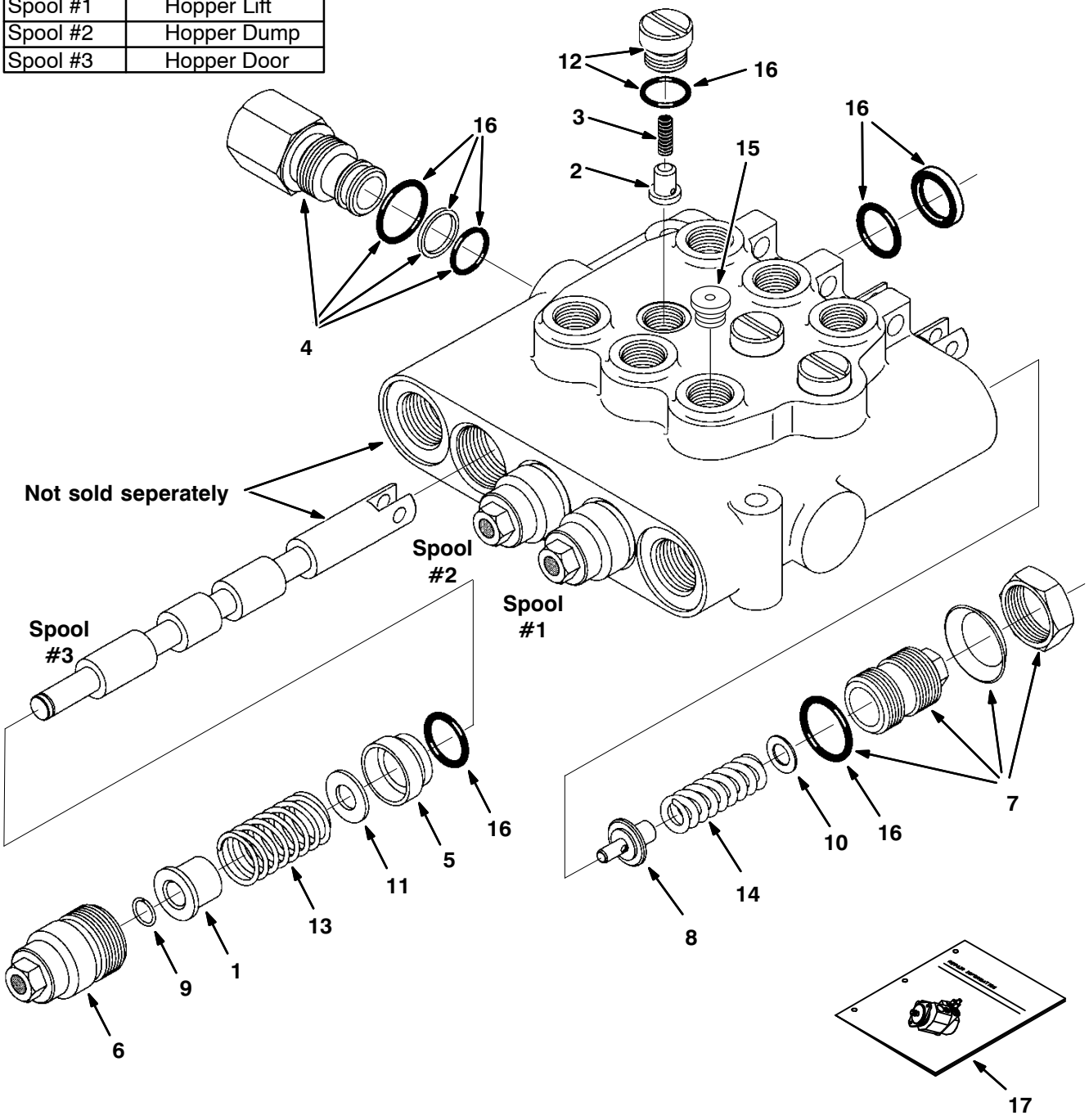

10408,09670 – ALL

Fig. 11 – Hydraulic Valve Breakdown, 375563

	Ref.	Part No.	Serial Number	Description	Qty.
▽		375563	(008467–)	Valve, Hyd Control Man	1
▲	1	79822	(008467–)	Spacer En	3
▲	2	79786	(008467–)	Plunger En	3
▲	3	79787	(008467–)	Spring En	3
▲	4	79823	(008467–)	Plug Assy,Byd En	1
▲	5	79788	(008467–)	Bushing En	3
▲	6	79789	(008467–)	Cap Assembly En	3
▲	7	79790	(008467–)	Plug Assembly En	1
▲	8	79791	(008467–)	Poppet En	1
▲	9	79792	(008467–)	Retaining Rng En	3
▲	10	79793	(008467–)	Shim .035 Thk En	1
▲	10	79798	(008467–)	Shim .015 Thk En	1
▲	10	79799	(008467–)	Shim .010 Thk En	1
▲	11	79794	(008467–)	Washer En	3
▲	12	79795	(008467–)	Plug & O–Ring En	3
▲	13	79824	(008467–)	Spring En	3
▲	14	79797	(008467–)	Spring En	1
▲	15	13904	(008467–)	Plug Gage #6	1
▲	16	79812	(008467–)	Seal Kit, Vlv En	1
▲	17	79820	(008467–)	Instr. Valve Repair Info	1

Fig. 12 – Cab Assembly

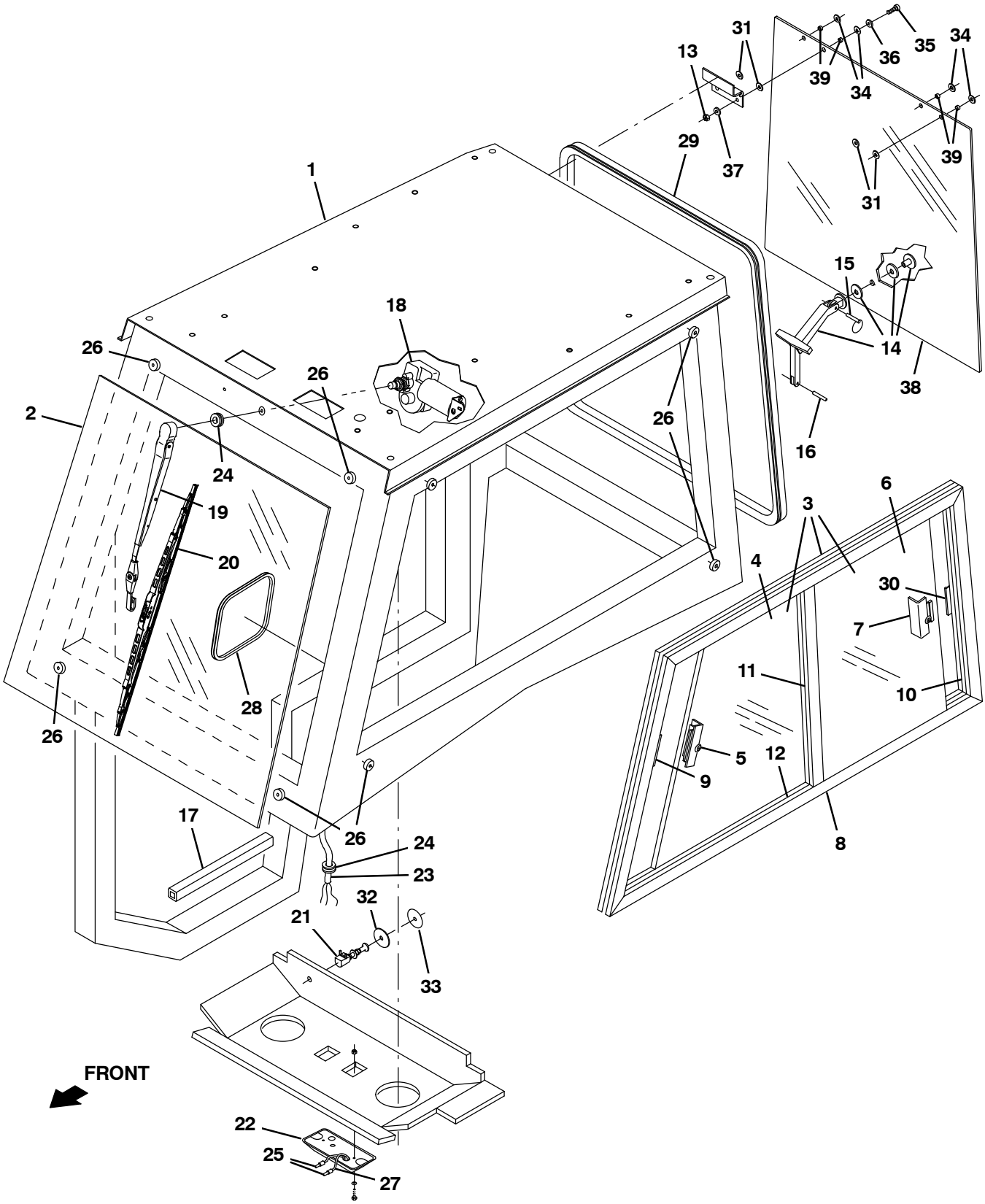

Fig. 12 – Cab Assembly

NOTE: The Cab kit, TENNANT Part Number 9012887 includes Fig. 12, Fig. 13, and Fig. 14.

	Ref.	Part No.	Serial Number	Description	Qty.
	1	1073930	(008467–)	Cab Wldt [800 Gray]	1
	2	1059997	(008467–)	Pane, Glass, Windshield	1
▽	3	1062707	(008467–)	Pane Assy, Cab, Lh Side	1
▲▽	4	1064896	(008467–)	Pane, Glass, Cab	1
▲▲	5	1068804	(008467–)	Latch Assy, Wndw [800 Cab]	1
▲▽	6	1064895	(008467–)	Pane, Glass, Cab	1
▲▲	7	1068804	(008467–)	Latch Assy, Wndw [800 Cab]	1
▲▽	8	21309	(008467–)	Frame, Pane, Cab, Side	1
▲▲	9	374765	(008467–)	Keeper, Latch, Pane	1
▲	10	1069298	(008467–)	Seal Stop, Wndw	1
▲	11	1069309	(008467–)	Seal, Wndw [Center Wipe]	1
▲	12	1069305	(008467–)	Channel, Seal, Wndw	1
	13	08712	(008467–)	Nut, Hex, Lock, M6 X 1.00, Nl, Ss	4
	14	1058259	(008467–)	Latch Kit, Wndw, Cab, Rear	1
	15	1062119	(008467–)	Ring, Wndw, Cab, Rear	1
	16	1065921	(008467–)	Pin, Roll, .187 Dia. X .56	1
	17	1061492	(008467–)	Seal, Door, Rbr, 14” Lg	1
	18	311303	(008467–)	Motor, Ele, Wiper, 12vdc	1
	19	1250704	(008467–)	Arm, Wiper, Windshield [280–380mm ADJ]	1
	20	1250690	(008467–)	Blade, Wiper, Windshield, 20.0”	1
	21	1062092	(008467–)	Switch, Motor, Wiper, 12v	1
▽	22	76996	(008467–)	Light, Dome 12V	1
▲		374759	(008467–)	Lamp	1
	23	1073310	(008467–)	Harness, Cab [Wipe/Lght/ A/C [800d/Kub.] *(See Fig. 15*)	1
	24	10632–14	(008467–)	Grommet, Rbr, 1.00id, F/1.4h, .12 Matl	2
	25	50474	(008467–)	Terminal, Qm, .25 16–14ga, Blu, F–Ins	2
	26	64757	(008467–)	Bumper, Rbr, Adh, 0.50d 0.14th	8
	27	77812	(008467–)	Wire, Dome Light	2
	28	380692	(008467–)	Molding, Trim (Gasoline only)	1
	29	1030593	(008467–)	Seal, Afmkt, Bulb, 90, 0.75d F/11ga 08ft	1
	30	374294	(008467–)	Latch, Keeper, Pane [J–dak]	1
	31	63416	(008467–)	Washer, Flat, 0.31b 0.88d .12, Rbr	4
	32	1066313	(008467–)	Plate, Sppt	1
	33	1066314	(008467–)	Label, Opertnl, Switch, On–off	1
	34	1066218	(008467–)	Washer, Flat, .28b 0.75d 1.80, Ne	4
	35	1065954	(008467–)	Screw, Pan, Phl, M6 X 1.0 X 20, Blk	4
	36	397779	(008467–)	Washer, Flat, 0.28b 1.00d .06, Stl, Blk	4
	37	32483	(008467–)	Washer, Flat, 0.25, Sae	4
	38	1060000	(008467–)	Glass, Pane, Windshield,800 Cab	1
	39	1061468	(008467–)	Spacer, Nyl	4

Fig. 13 – Cab Door Assembly

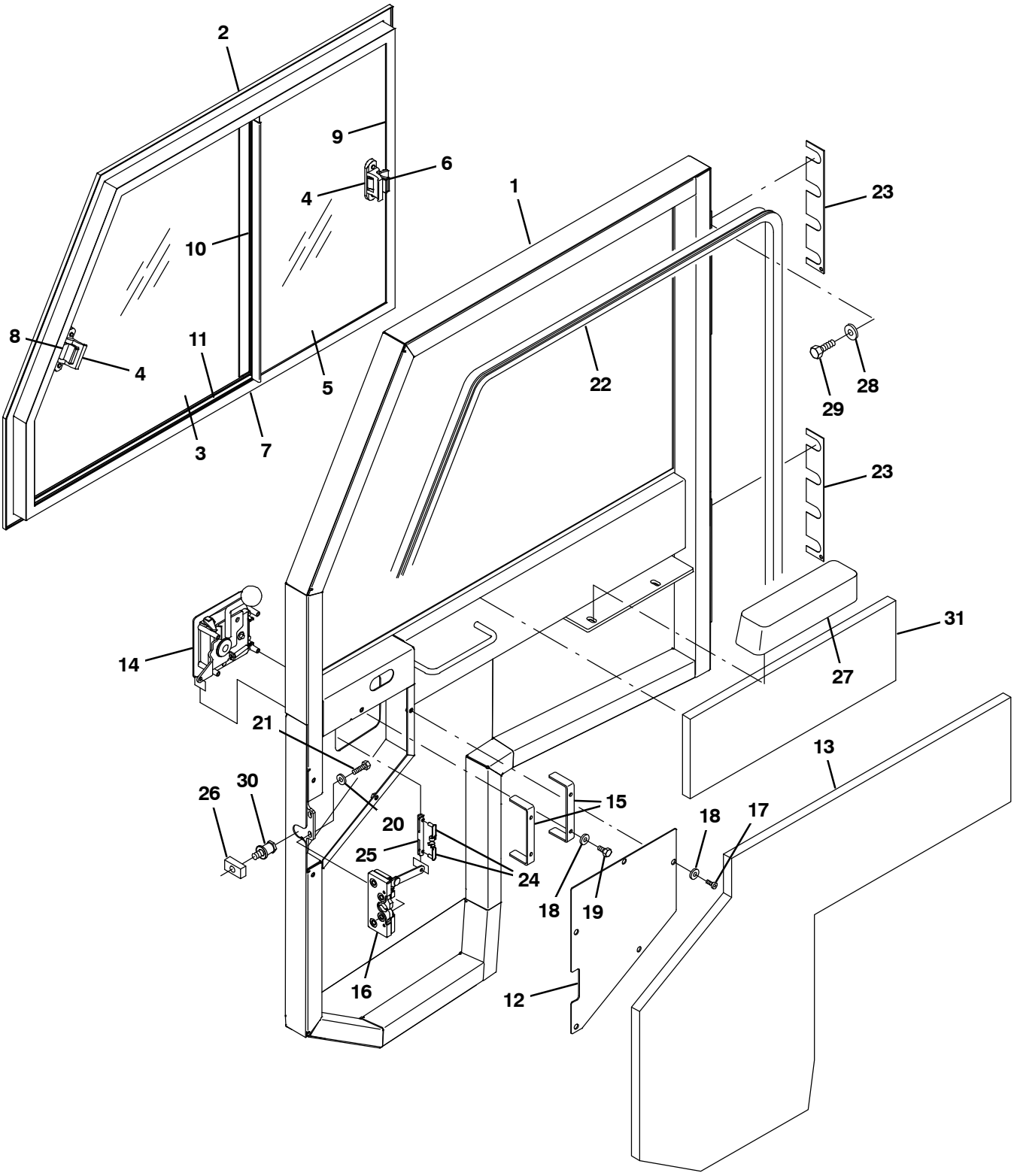

08784 – ALL

Fig. 13 – Cab Door Assembly

NOTE: The Cab kit, TENNANT Part Number 9012887 includes Fig. 12, Fig. 13, and Fig. 14.

	Ref.	Part No.	Serial Number	Description	Qty.
▽		9012899	(008467–)	Door Assy, Cab, Replmt [800gray]	1
▲	1	1073931	(008467–)	Door Wldt, Cab [800 Gray]	1
▲▽	2	1062708	(008467–)	Pane Assy, Door, Cab, Rh Side	1
▲▲	3	1064893	(008467–)	Pane, Glass, Door	1
▲▲	4	1068804	(008467–)	Latch Assy, Wndw [800 Cab]	2
▲▲	5	1064894	(008467–)	Pane, Glass, Door	1
▲▲	6	374294	(008467–)	Latch, Keeper, Pane [J–dak]	1
▲▲	7	21313	(008467–)	Frame, Pane, Door, Side	1
▲▲	8	374765	(008467–)	Keeper, Latch, Pane	1
▲▲	9	1069298	(008467–)	Seal Stop, Wndw	1
▲▲	10	1069309	(008467–)	Seal, Wndw [Center Wipe]	2
▲▲	11	1069305	(008467–)	Channel, Seal, Wndw	1
▲	12	1074539	(008467–)	Cover, Latch Assy, Door [800 Gray]	1
▲	13	1065909	(008467–)	Insulation, Acstc, Door, Side	1
▲	14	1058254	(008467–)	Latch Assy, Door	1
▲		21150	(008467–)	Key Set	1
▲	15	1061447	(008467–)	Bracket, Latch, Sppt	2
▲	16	1058256	(008467–)	Lock Assy, Door	1
▲	17	06933	(008467–)	Screw, Pan, Phl, M5 X 0.80 X 16, 4.8	5
▲	18	19066	(008467–)	Washer, Flat, 0.25b 0.56d .05, Pl, 10	9
▲	19	42011	(008467–)	Screw, Hex, 10–24 X 0.50, Ss	4
▲	20	32483	(008467–)	Washer, Flat, 0.25, Sae	3
▲	21	25046	(008467–)	Screw, Hex, .25–20 X 1.00, G5	3
▲	22	1030601	(008467–)	Seal, Afmkt, Bulb, 90, 0.75d F/11ga 20ft	1
▲	23	1062143	(008467–)	Plate, Shim	2
▲	24	1058258	(008467–)	Clip, Retainer	2
▲	25	1058257	(008467–)	Link, Connecting	1
	26	1061655	(008467–)	Plate, Thrd	1
	27	311336	(008467–)	Armrest, Black	1
	28	32492	(008467–)	Washer, Flat, 0.38, Std	8
	29	06961	(008467–)	Screw, Hex, M10 X 1.5	8
	30	58490	(008467–)	Pin, Latch	1
	31	1073737	(008467–)	Insulation, Acstc, 0.5, 05.5 X 18.9 Adh	1

Fig. 14 – Cab Insulation Group

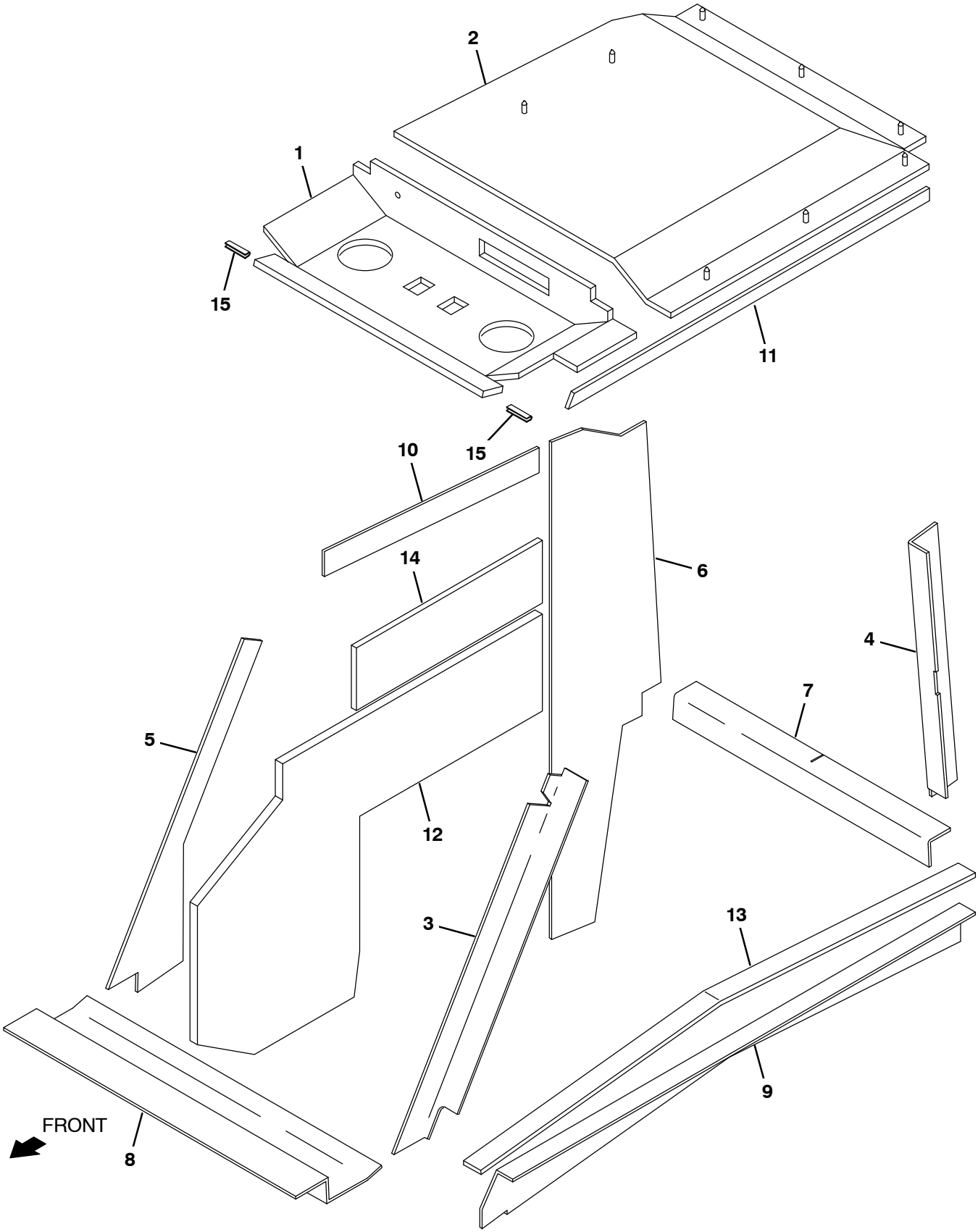

08953 – ALL

Fig. 14 – Cab Insulation Group

NOTE: The Cab kit, TENNANT Part Number 9012887 includes Fig. 12, Fig. 13, and Fig. 14.

	Ref.	Part No.	Serial Number	Description	Qty.
▽		1074781	(008467–)	Insulation Kit, Cab [800]	1
▲	1	77800	(008467–)	Insulation, Acstc, Cab Front	1
▲	2	77801	(008467–)	Insulation, Acstc, Cab Rear	1
▲	3	77802	(008467–)	Insulation, Acstc, Cab, Leg, Front	1
▲	4	77803	(008467–)	Insulation, Acstc, Cab, Leg, Rear	1
▲	5	77804	(008467–)	Insulation, Acstc, Cab, Leg, Front	1
▲	6	77805	(008467–)	Insulation, Acstc, Cab, Leg, Rear	1
▲	7	77806	(008467–)	Insulation, Acstc, Cab, Proj, Rear	1
▲	8	77807	(008467–)	Insulation, Acstc, Cab, Proj, Front	1
▲	9	77808	(008467–)	Insulation, Acstc, Cab, Proj, Side	1
▲	10	77809	(008467–)	Insulation, Acstc, Cab, Proj, Upper	1
▲	11	1070055	(008467–)	Insulation, Acstc, Cab, Proj, Ls	1
▲	12	1065909	(008467–)	Insulation, Acstc, 0.8, 20.9 X 35.0 Ntch	1
▲	13	1073666	(008467–)	Insulation, Acstc, 0.5, 47.3 X 01.8 Adh	1
▲	14	1073737	(008467–)	Insulation, Acstc, 0.5, 05.5 X 18.9 Adh	1
	15	384156	(008467–)	Molding, Trim, Pvc, .18–.31 01.5l	2

Fig. 15 – Cab Wire Harness Group

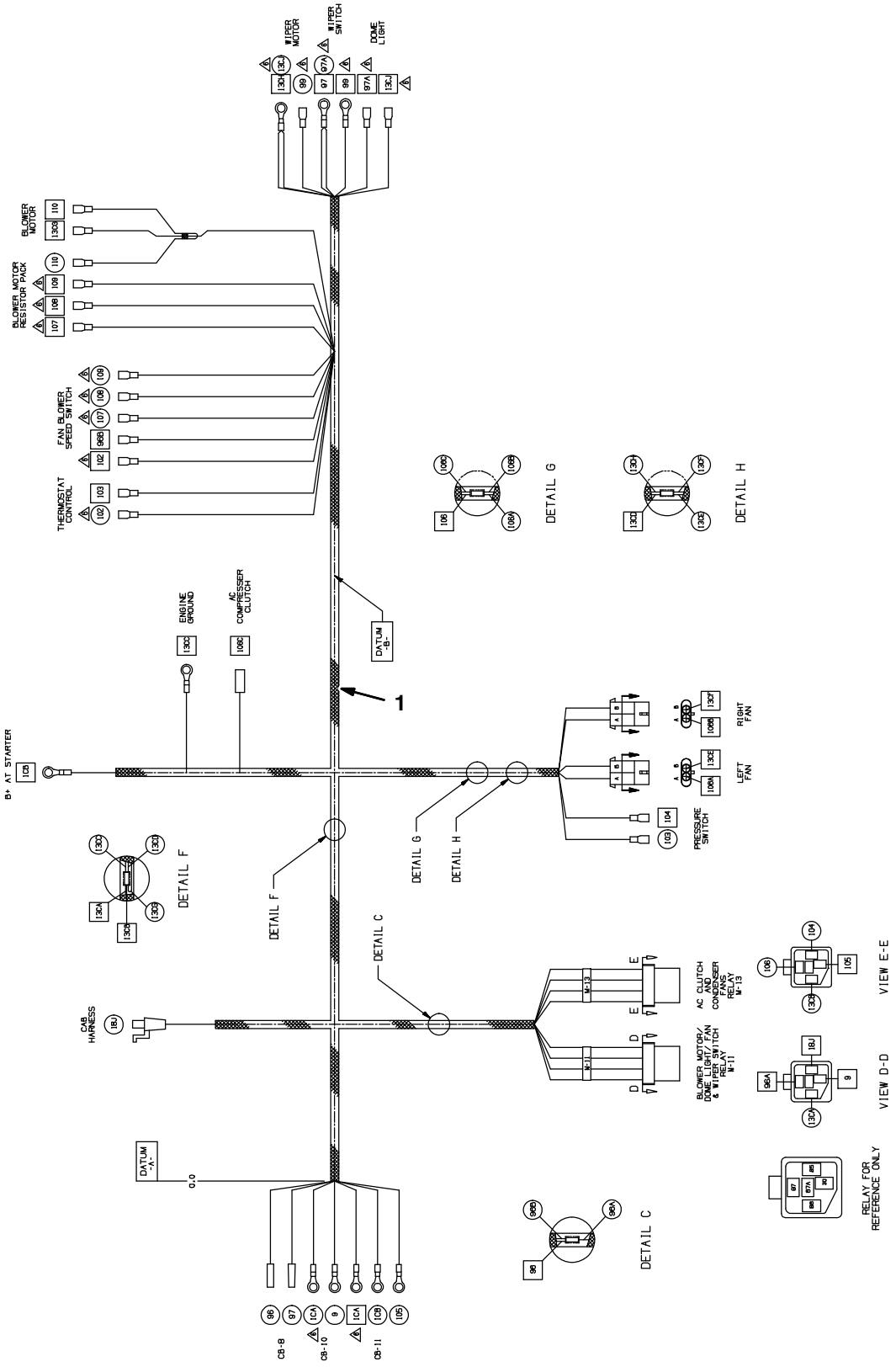

356487 – D

NOTE: The Cab kit, TENNANT Part Number 9012887 includes Fig. 12, Fig. 13, and Fig. 14.

Ref.	Part No.	Serial Number	Description	Qty.
1	1073310	(008467–)	Harness, Cab Wipe/Lght/Ac [800 Ku Dsl]	1

Fig. 16 – AC Condenser Box Breakdown, 9012898

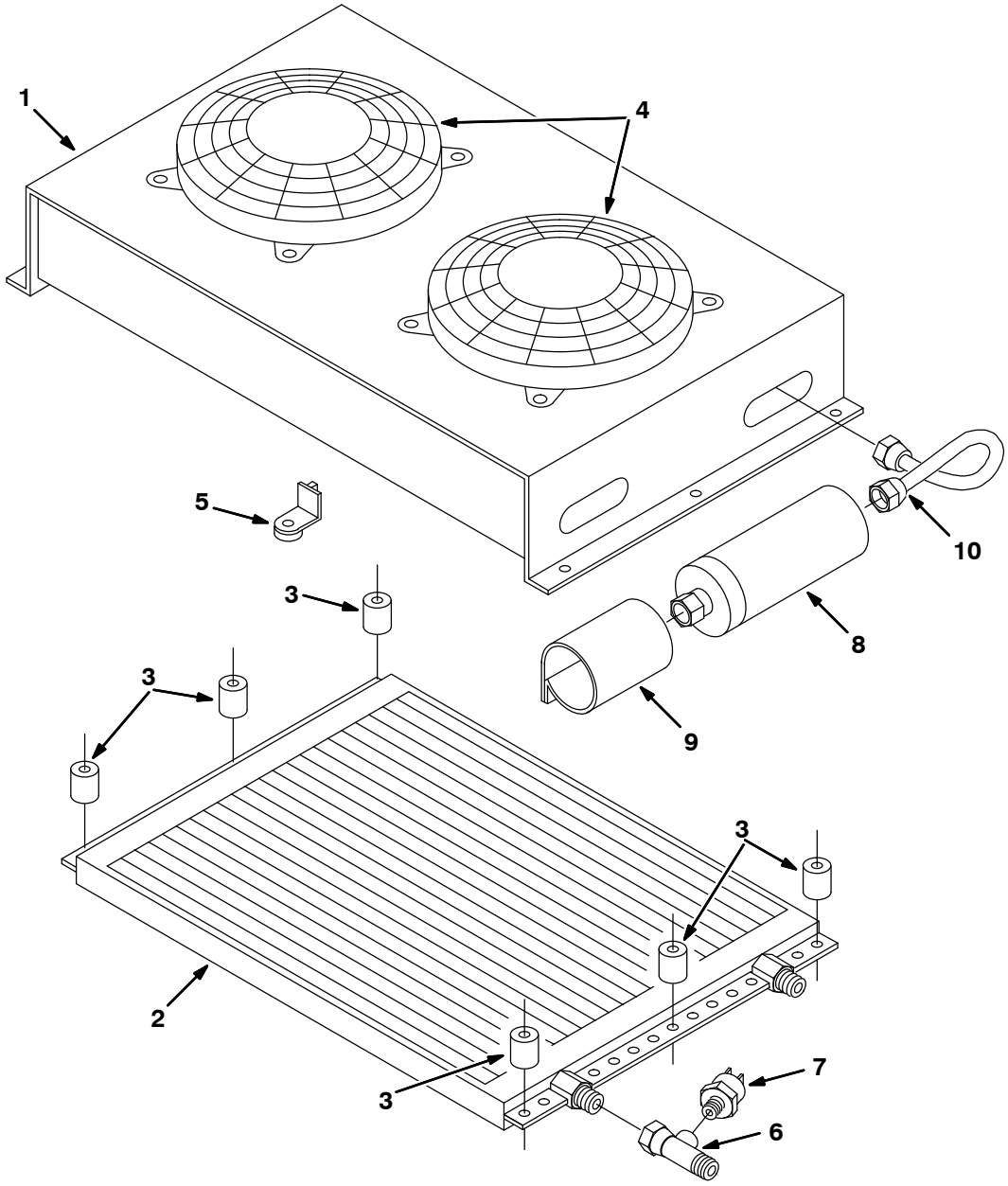

350830 – ALL

	Ref.	Part No.	Serial Number	Description	Qty.
▽		9012898	(008467–)	Condenser, A/C, Roof [R134 Bd, Gray]	1
▲	1	1073906	(008467–)	Condenser, A/C [Badger Gray]	1
▲	2	380667	(008467–)	Coil, Condenser	1
▲	3	380668	(008467–)	Spacer, Condenser	6
▲	4	380669	(008467–)	Fan, Condenser	2
▲	5	380670	(008467–)	Foot, Fan	8
▲	6	380671	(008467–)	Ftg, Shrader	1
▲	7	393349	(008467–)	Switch, A/C [Binary]	1
▲	8	380627	(008467–)	Dryer, Ac	1
▲	9	380628	(008467–)	Bracket,A/C Dryer	1
▲	10	380626	(008467–)	Tube Asy,Cond/Dry	1

Fig. 17 – AC and Heater Box Breakdown, 1073904

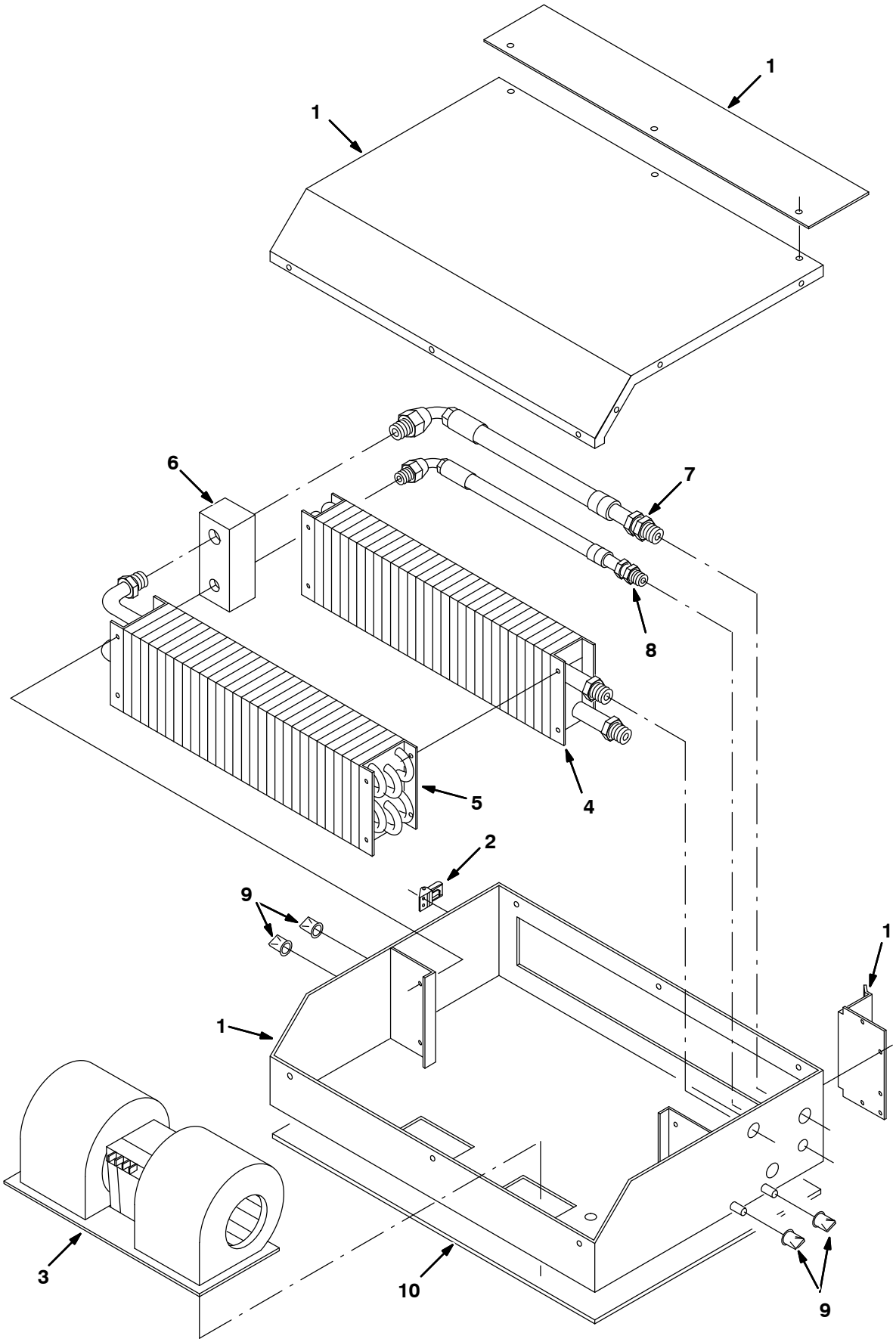

350826 – ALL

Fig. 17 – AC and Heater Box Breakdown, 1073904

	Ref.	Part No.	Serial Number	Description	Qty.
▽		1073904	(008467–)	Heater, W/ A/C [Badger, Gray]	1
▲	1	1073907	(008467–)	Housing, Heater [Badger, Gray]	1
▲	2	87579	(008467–)	Latch, Tension	1
▲	3	380649	(008467–)	Blower, Heat/Ac	1
▲	4	380650	(008467–)	Heater Coil	1
▲	5	380651	(008467–)	Coil, Evaporator	1
▲	6	380652	(008467–)	Valve, Expansion	1
▲	7	380578	(008467–)	A/C Hose#10 134A	1
▲	8	380579	(008467–)	A/C Hose #6 134A	1
▲	9	380659	(008467–)	Duck Bill	4
▲	10	380616	(008467–)	Gasket, Box/Cab	1

Fig. 18 – Heater Box Breakdown, 1073905

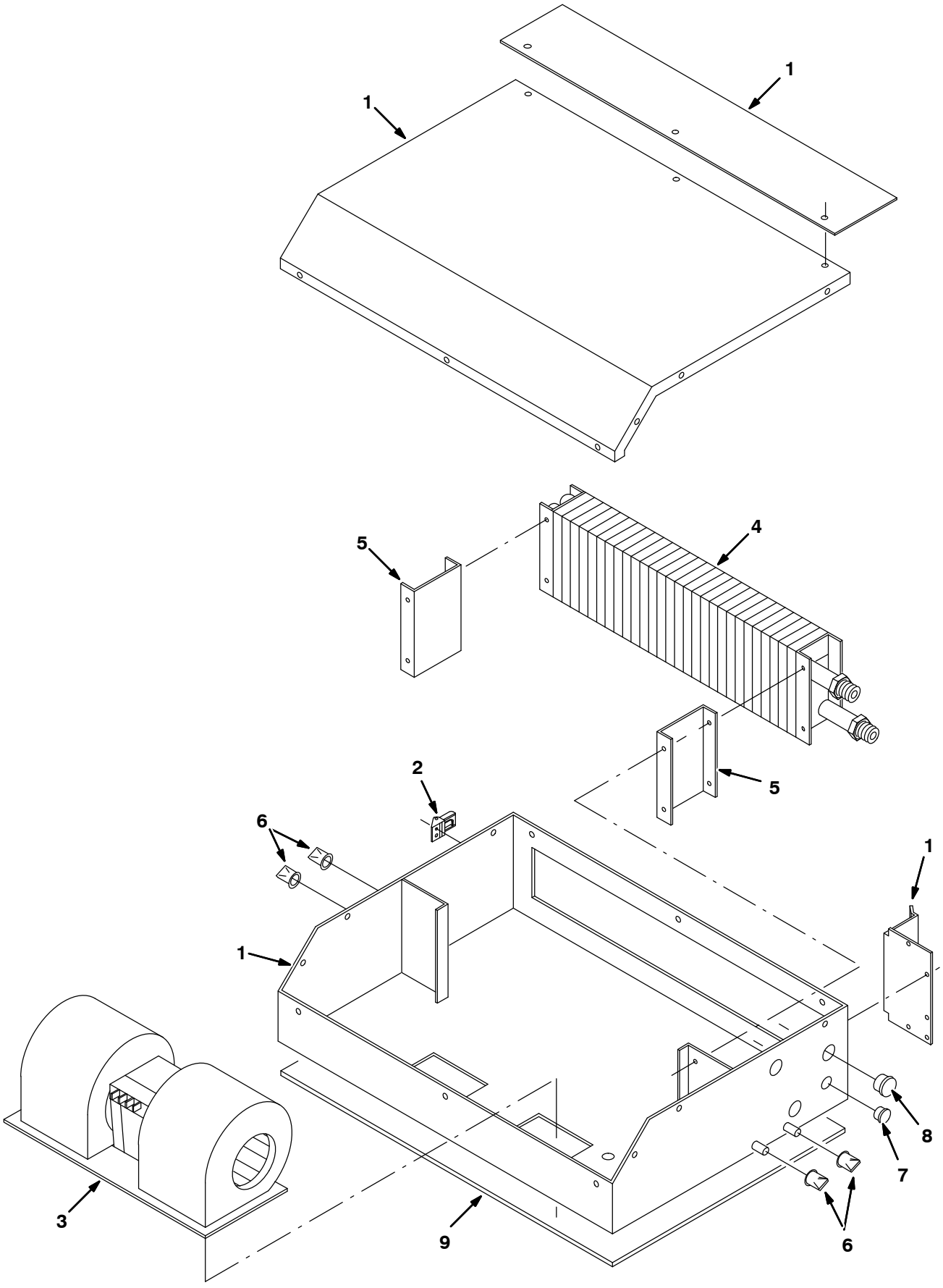

350828 – ALL

Fig. 18 – Heater Box Breakdown, 1073905

	Ref.	Part No.	Serial Number	Description	Qty.
▽		1073905	(008467–)	Heater [Badger, Gray]	1
▲	1	1073907	(008467–)	Housing, Heater [Badger, Gray]	1
▲	2	87579	(008467–)	Latch, Tension	1
▲	3	380649	(008467–)	Blower, Heat/Ac	1
▲	4	380650	(008467–)	Heater Coil	1
▲	5	380660	(008467–)	Brkt,Mtg,Htr Coil	2
▲	6	380659	(008467–)	Duck Bill	4
▲	7	57167	(008467–)	Plugbtn .62H .03–.12 Blacknyl	1
▲	8	82727	(008467–)	Plugbtn .88H .03–.12 Blacknyl	1
▲	9	380616	(008467–)	Gasket, Box/Cab	1

Fig. 19 – Brake Assy, Right Hand (R.H.) 77790

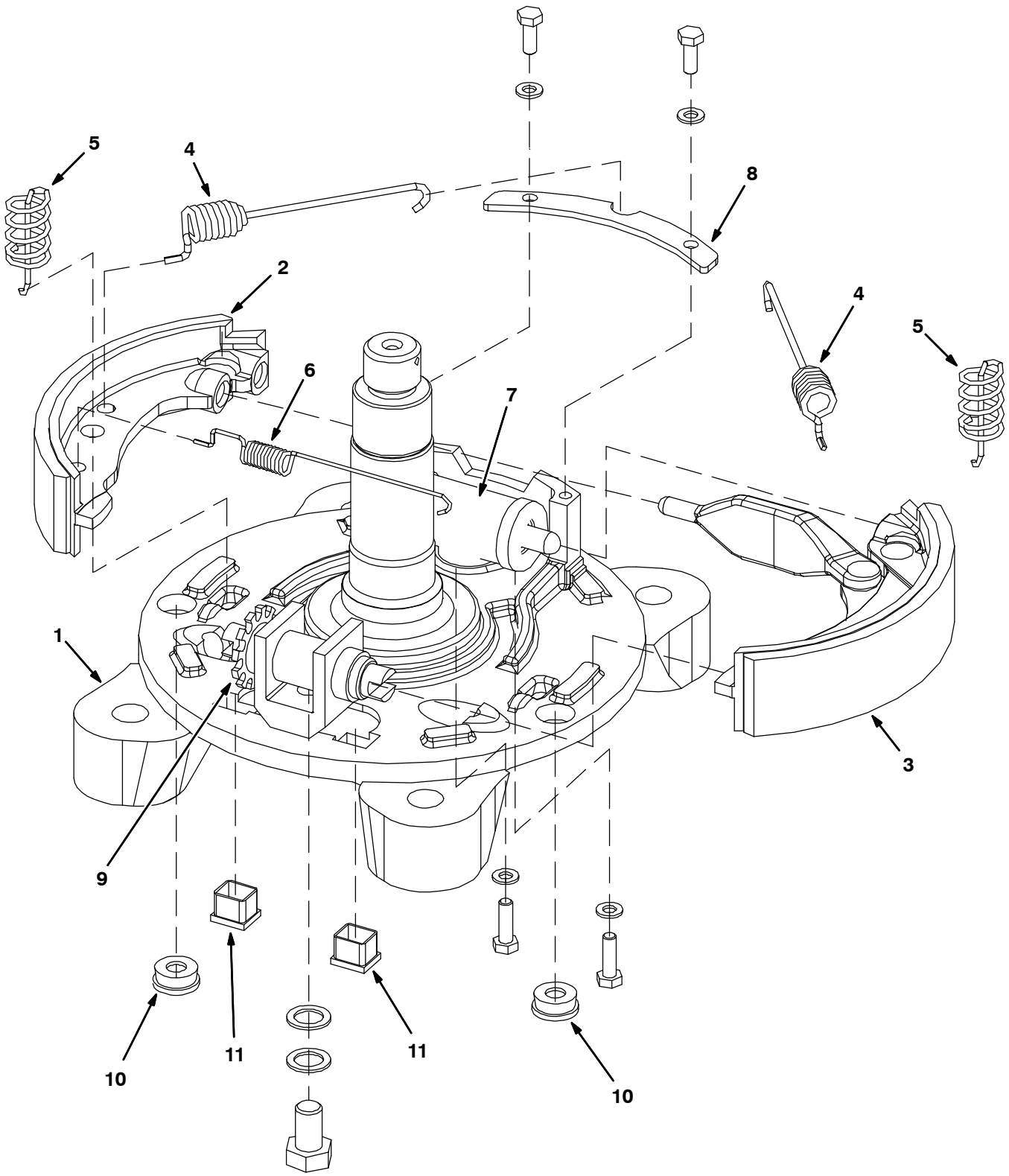

353623 – ALL

Fig. 19 – Brake Assy, Right Hand (R.H.) 77790

	Ref.	Part No.	Serial Number		Description	Qty.
▽		77790	(008467–	)	Brake Assy, Drum, Hyd, 08.8d 1.6w Rh	1
▲	1	77768	(008467–	)	Backing Plate Rh	1
▲	2	70613	(008467–	)	Shoe, Brake	1
▲	3	70612	(008467–	)	Shoe, Brake	1
▲	4	21728	(008467–	)	Spring	2
▲	5	70617	(008467–	)	Spring	2
▲	6	70618	(008467–	)	Spring	1
▲	7	70609	(008467–	)	Cylinder, Wheel, Brake	1
▲	8	70603	(008467–	)	Clamp, Hold Down	1
▲	9	70615	(008467–	)	Adjuster, Manual	1
▲	10	372950	(008467–	)	Plug, Rbr, Rnd	2
▲	11	372951	(008467–	)	Plug, Plstc, Sq	2

Fig. 20 – Brake Assy, Left Hand (L.H.) 77770

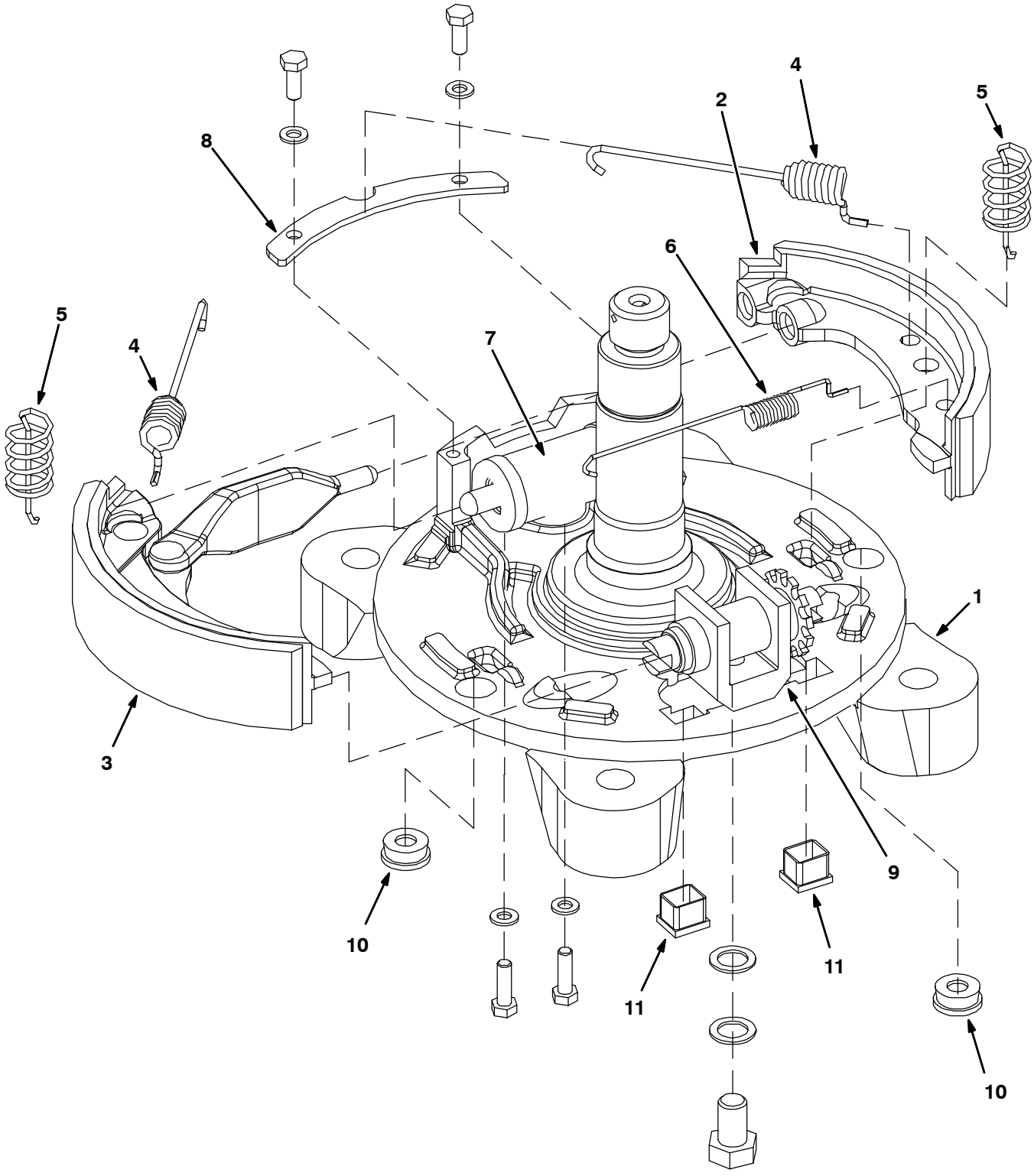

353624 – ALL

Fig. 20 – Brake Assy, Left Hand (L.H.) 77770

	Ref.	Part No.	Serial Number		Description	Qty.
▽		77770	(008467–	)	Brake Assy, Drum, Hyd, 08.0d 1.6w Lh	1
▲	1	77769	(008467–	)	Plate, Backing	1
▲	2	70613	(008467–	)	Shoe, Brake	1
▲	3	70611	(008467–	)	Shoe, Brake	1
▲	4	21728	(008467–	)	Spring	2
▲	5	70617	(008467–	)	Spring	2
▲	6	70618	(008467–	)	Spring	1
▲	7	70609	(008467–	)	Cylinder, Wheel, Brake	1
▲	8	70603	(008467–	)	Clamp, Hold Down	1
▲	9	70615	(008467–	)	Adjuster, Manual	1
▲	10	372950	(008467–	)	Plug, Rbr, Rnd	2
▲	11	372951	(008467–	)	Plug, Plstc, Sq	2

Fig. 21 – Hydraulic Solenoid Valve Breakdown, 1049210

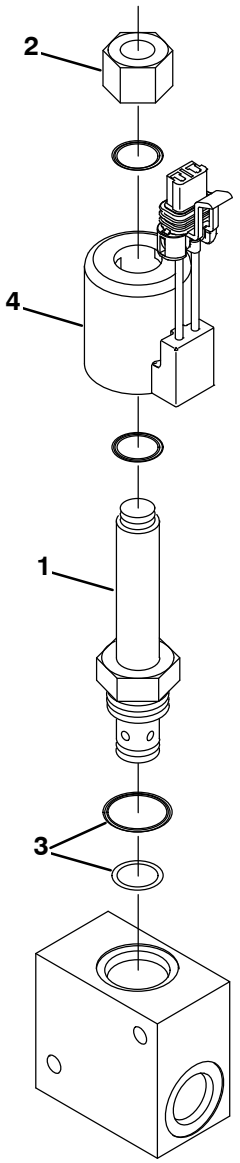

354903 – ALL

	Ref.	Part No.	Serial Number	Description	Qty.
▽		1049210	(008467–008631)	Valve, Cntrl, Hyd, Solenoid, 12vdc 12gpm	1
▲	1	1050812	(008467–008631)	Stem, Valve, Hyd	1
▲	2	1050811	(008467–008631)	Nut, Valve, Cartridge	1
▲	3	1050780	(008467–008631)	Seal Kit, Cartridge	1
▲	4	1050809	(008467–008631)	Solenoid, Valve, Hyd, 36vdc	1

Fig. 22 – Hydraulic Solenoid Valve Breakdown, 1237091

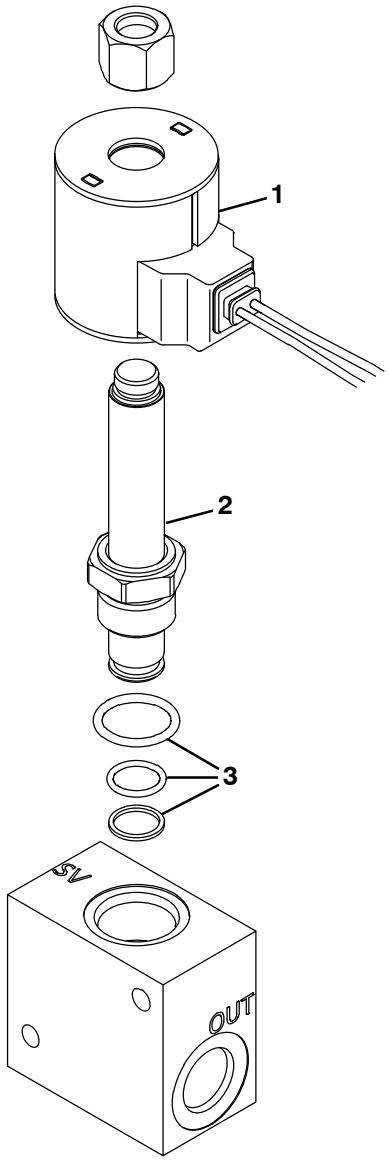

356938 – ALL

	Ref.	Part No.	Serial Number		Description	Qty.
▽		1237091	(008632–	)	Valve, Hyd, Solenoid, 12gpm [1049210]	1
▲	1	9017924	(008632–	)	Coil Assembly [Ca10068]	1
▲	2	373663	(008632–	)	Valve, Stem, No	1
▲	3	9017933	(008632–	)	Seal Kit [Sk10–2n–T]	1

Fig. 23 – Hydraulic Solenoid Valve Breakdown, 1049209

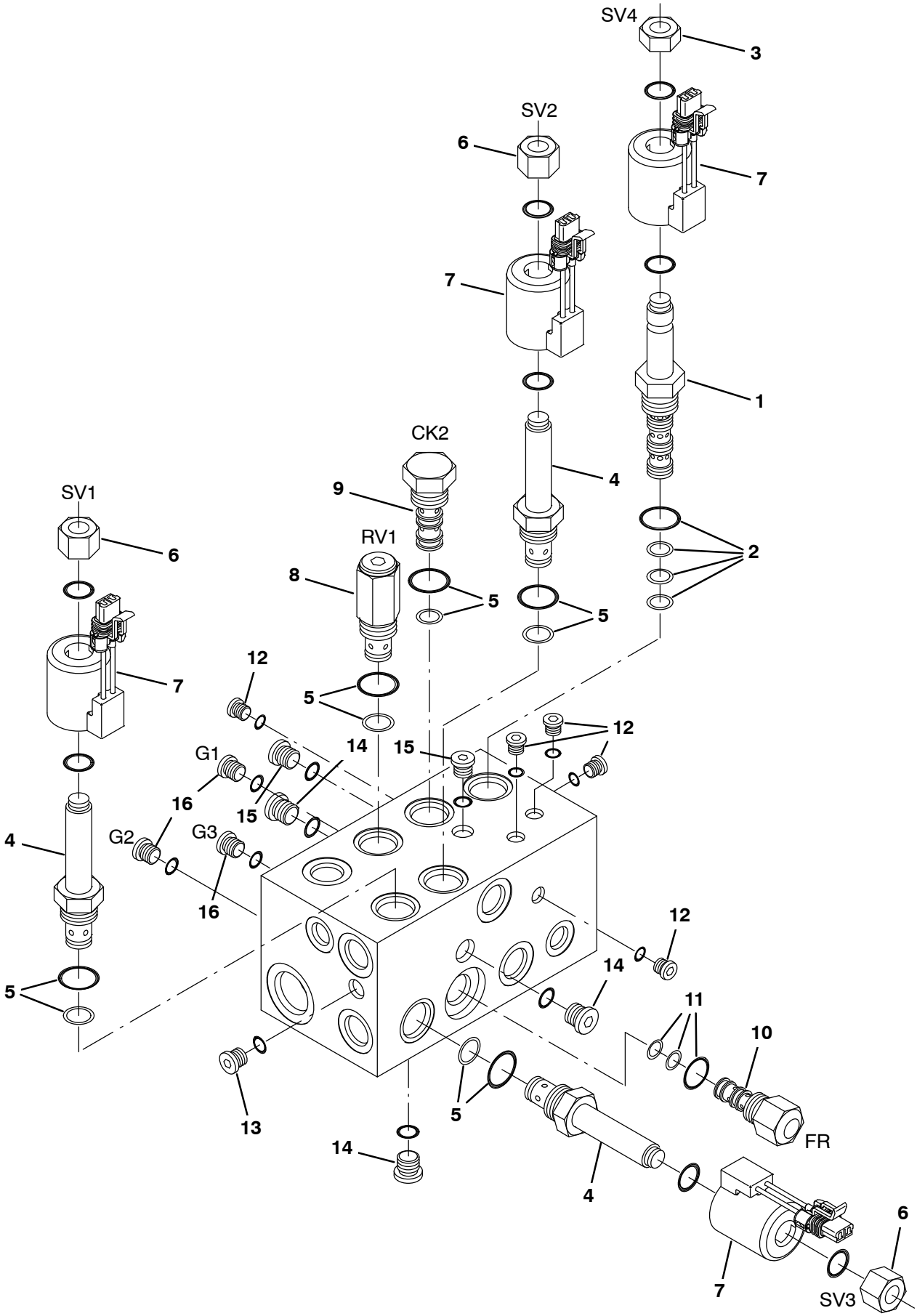

354896 – 800

Fig. 23 – Hydraulic Solenoid Valve Breakdown, 1049209

	Ref.	Part No.	Serial Number	Description	Qty.
▽		1049209	(008467–008631)	Valve, Cntrl, Hyd, Solenoid, 12vdc 08gpm	1
▲	1	1050861	(008467–008631)	Solenoid, Valve, Hyd	1
▲	2	1050870	(008467–008631)	Seal Kit, Cartridge	1
▲	3	373584	(008467–008631)	Nut, Valve, Cartridge	1
▲	4	1050812	(008467–008631)	Stem, Valve, Hyd	3
▲	5	1050780	(008467–008631)	Seal Kit, Cartridge	1
▲	6	373585	(008467–008631)	Nut, Valve, Cartridge	3
▲	7	1050809	(008467–008631)	Solenoid, Valve, Hyd, 36vdc	4
▲	8	1050862	(008467–008631)	Valve, Cartridge, Relief	1
▲	9	1050863	(008467–008631)	Valve, Cartridge, Check	1
▲	10	1050864	(008467–008631)	Valve, Cartridge, Flow Reg	1
▲	11	1050871	(008467–008631)	Seal Kit, Cartridge	1
▲	12	1050865	(008467–008631)	Fitting, Plug, Om02, Valve	5
▲	13	1050866	(008467–008631)	Fitting, Plug, Om04, Valve	1
▲	14	1050867	(008467–008631)	Fitting, Plug, Om06, Valve	3
▲	15	1050868	(008467–008631)	Fitting, Plug, Om05, Valve	2
▲	16	1050869	(008467–008631)	Fitting, Plug, Om04, Valve	3

Fig. 24 – Hydraulic Solenoid Valve Breakdown, 1237090

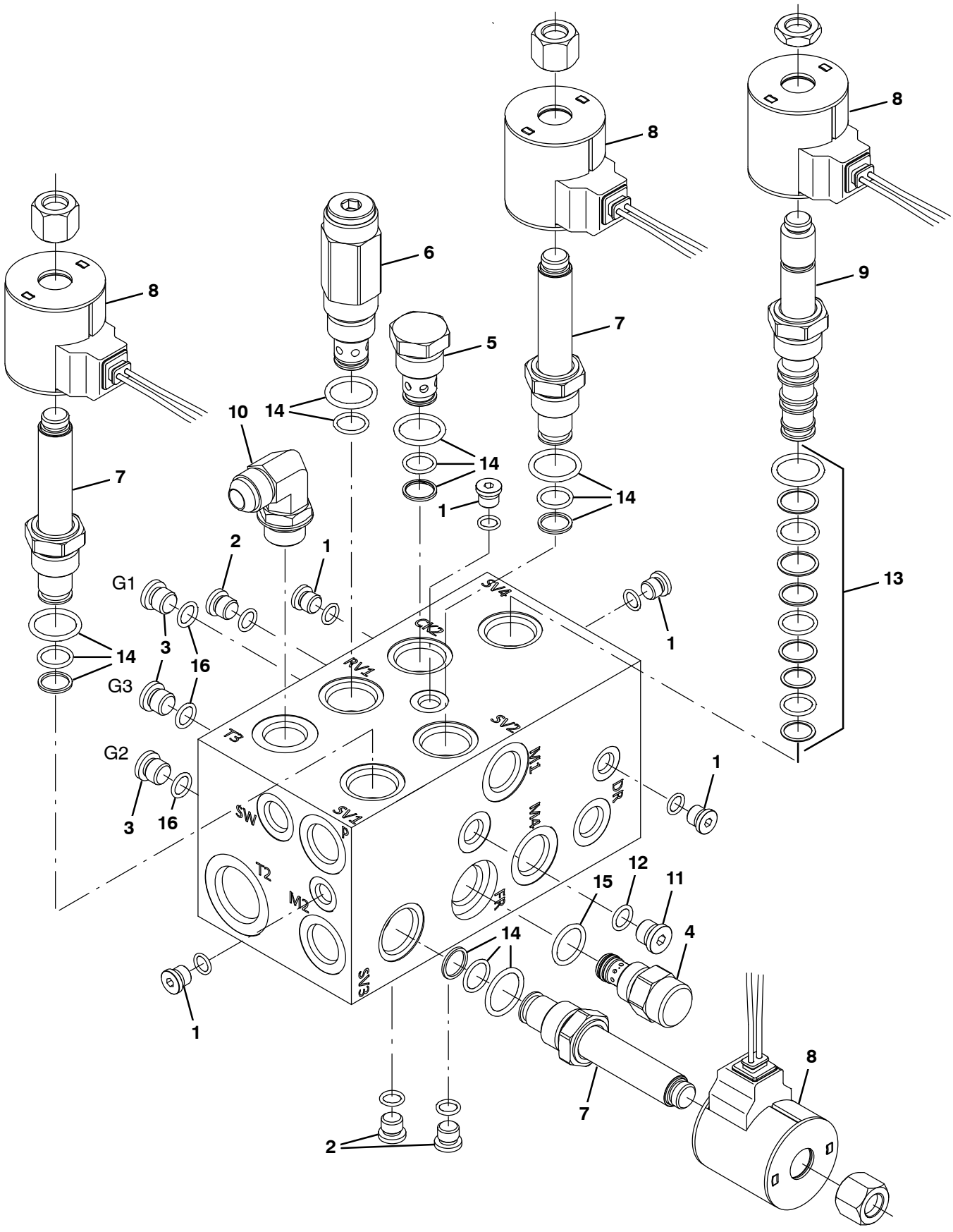

356837 – 800

Fig. 24 – Hydraulic Solenoid Valve Breakdown, 1237090

	Ref.	Part No.	Serial Number		Description	Qty.
▽		1237090	(008632–	)	Valve, Hyd, Solenoid, 8gpm [1049209]	1
▲	1	9017930	(008632–	)	Plug 7mm [Hw10286–070]	5
▲	2	9017929	(008632–	)	Plug 12mm [Hw10286–120]	3
▲	3	9017928	(008632–	)	Plug [515–04]	3
▲	4	9017927	(008632–	)	Flow Regulator [Fr08–20f–0–N–1.50]	1
▲	5	9017926	(008632–	)	Check Valve [Cv10–20–0–N–30]	1
▲	6	9017925	(008632–	)	Relief Valve [Rv10–22h–0–N–35/25]	1
▲	7	9017923	(008632–	)	Spool [Sv10–40–0–N–00]	3
▲	8	9017924	(008632–	)	Coil Assembly [Ca10068]	4
▲	9	373663	(008632–	)	Valve, Stem, No	1
▲	10	9017922	(008632–	)	Fitting Elbow [Ft10064–08–08]	1
▲	11	9017920	(008632–	)	Plug Sae–04 [6118004]	1
▲	12	9017931	(008632–	)	Seal Kit [Se10155]	1
▲	13	9017932	(008632–	)	Seal Kit [Sk–10–4n–Mmm]	1
▲	14	9017933	(008632–	)	Seal Kit [Sk10–2n–T]	5
▲	15	9017934	(008632–	)	Seal Kit [Sk08–2n–M]	2
▲	16	9017935	(008632–	)	Seal Kit [–904]	3

Fig. 25 – Hydraulic Solenoid Valve Breakdown, 1049211

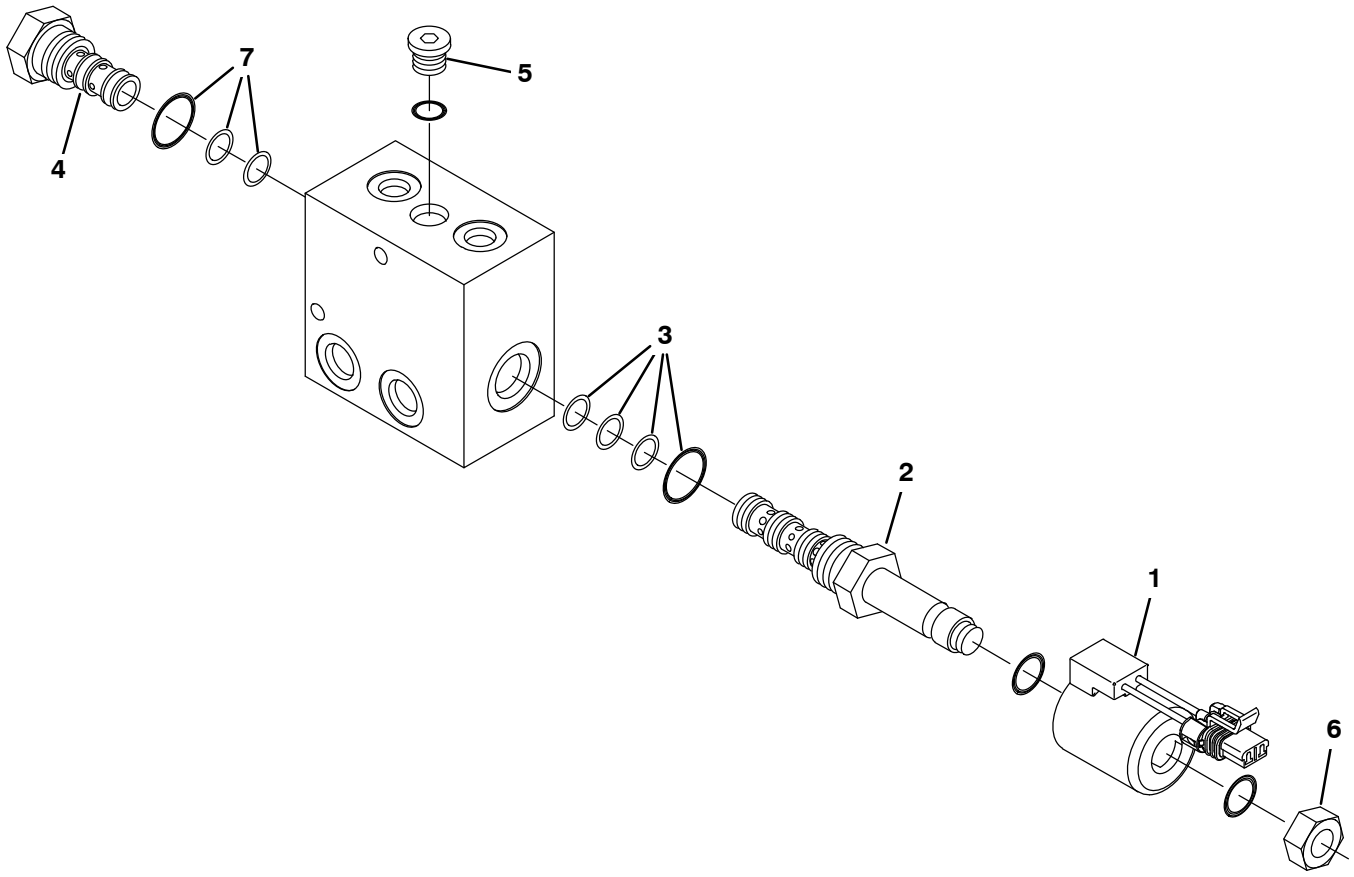

354900 – ALL

	Ref.	Part No.	Serial Number	Description	Qty.
▽		1049211	(008467–008631)	Valve, Cntrl, Hyd, Solenoid, 12vdc 06gpm	1
▲	1	1050809	(008467–008631)	Solenoid, Valve, Hyd, 36vdc	1
▲	2	1050861	(008467–008631)	Solenoid, Valve, Hyd	1
▲	3	1050870	(008467–008631)	Seal Kit, Cartridge	1
▲	4	1050872	(008467–008631)	Valve, Cartridge, Check	1
▲	5	1050873	(008467–008631)	Fitting, Plug, Om06, Valve	1
▲	6	1051078	(008467–008631)	Nut, Valve, Cartridge	1
▲	7	1051079	(008467–008631)	Seal Kit, Cartridge	1

Fig. 26 – Hydraulic Solenoid Valve Breakdown, 1237092

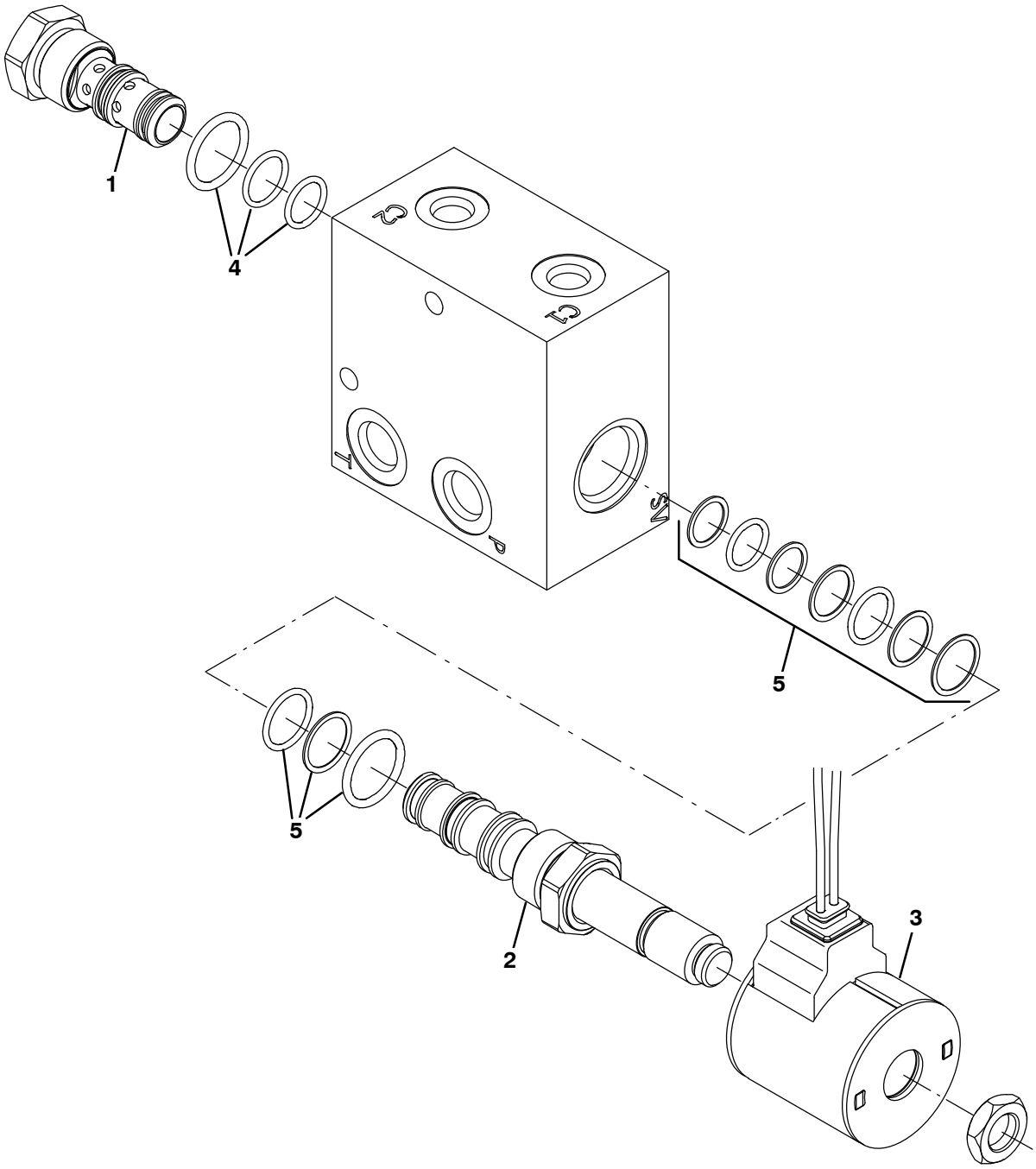

356839 – ALL

	Ref.	Part No.	Serial Number		Description	Qty.
▽		1237092	(008632–	)	Valve, Hyd, Solenoid, 6gpm [1049211]	1
▲	1	9017936	(008632–	)	Check Valve [Pc10–30–0–N–70]	1
▲	2	9017923	(008632–	)	Spool [Sv10–40–0–N–00]	1
▲	3	9017924	(008632–	)	Coil Assembly [Ca10068]	1
▲	4	9017937	(008632–	)	Seal Kit [Sk10–3n–Tm]	1
▲	5	9017932	(008632–	)	Seal Kit [Sk–10–4n–Mmm]	1

Fig. 27 – Hydraulic Cylinder Breakdown, 1026719

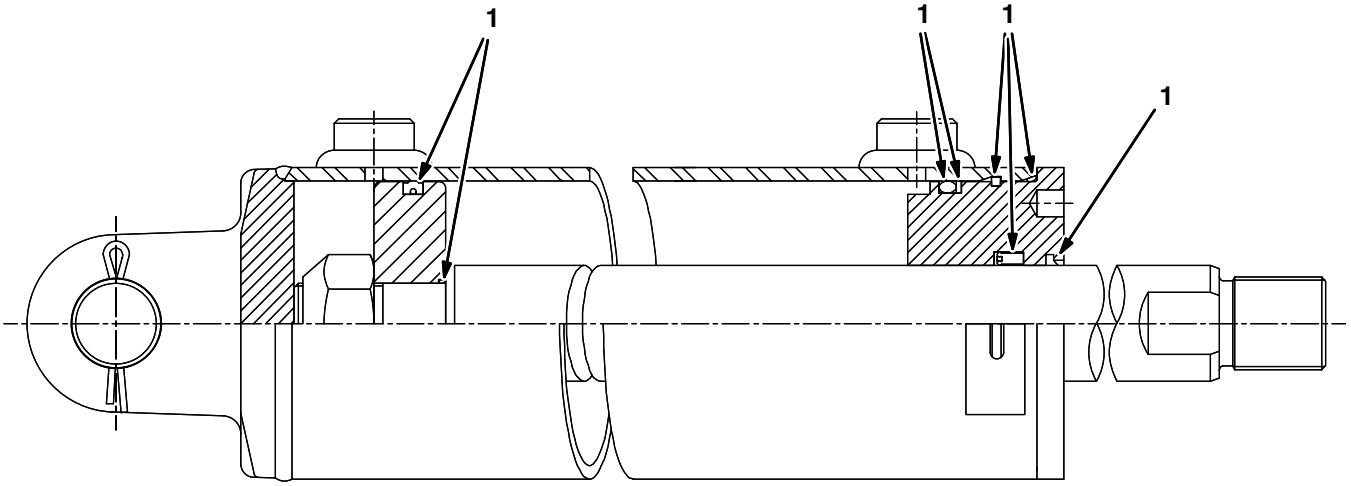

354486 – ALL

	Ref.	Part No.	Serial Number		Description	Qty.
▽		1026719	(008467–	)	Cylinder, Hyd, 4.0b 29.1l 14.50strk 2500	1
▲	1	9001702	(008467–	)	Seal Kit, Cyl, Hyd	1

SECTION 5

Contents **Page**

Fig. 1 – Cylinder Block Group 5-2
Fig. 2 – Rocker Cover Group 5-4
Fig. 3 – Cylinder Head Group 5-5
Fig. 4 – Front Cover and Oil Pan Group 5-6
Fig. 5 – Camshaft and Valve Group 5-8
Fig. 6 – Piston and Crankshaft Group 5-10
Fig. 7 – Balancer Group 5-11
Fig. 8 – Oil Pump and Pressure Switch Group 5-12
Fig. 9 – Water Pump Group 5-13
Fig. 10 – Intake Manifold Gasket Group . . . 5-14
Fig. 11 – Exhaust Manifold Gasket Group . . 5-16
Fig. 12 – Fan Tensioner and Pump Mount Group 5-17
Fig. 13 – Flywheel Group 5-18
Fig. 14 – Ignition Coil and Spark Plug Group 5-19
Fig. 15 – Starter / Alternator Group 5-20
Fig. 16 – Remote Oil Filter Group 5-21
Fig. 17 – Coolant Group 5-22
Fig. 18 – DSR Coolant Group, LPG Engine 5-23
Fig. 19 – Electrical Group 5-24
Fig. 20 – Fuel Rail Group, Gasoline Engine 5-26
Fig. 21 – Throttle Body Group, Gasoline Engine 5-27
Fig. 22 – Throttle Body Group, LPG Engine 5-28
Fig. 23 – PCV Fresh Air Hose Group, LPG Engine 5-29
Fig. 23 – Vaporizer Group, LPG Engine . . . 5-30
Fig. 25 – Electronic Pressure Regulator (EPR) Group, LPG Engine 5-32

Fig. 1 – Cylinder Block Group

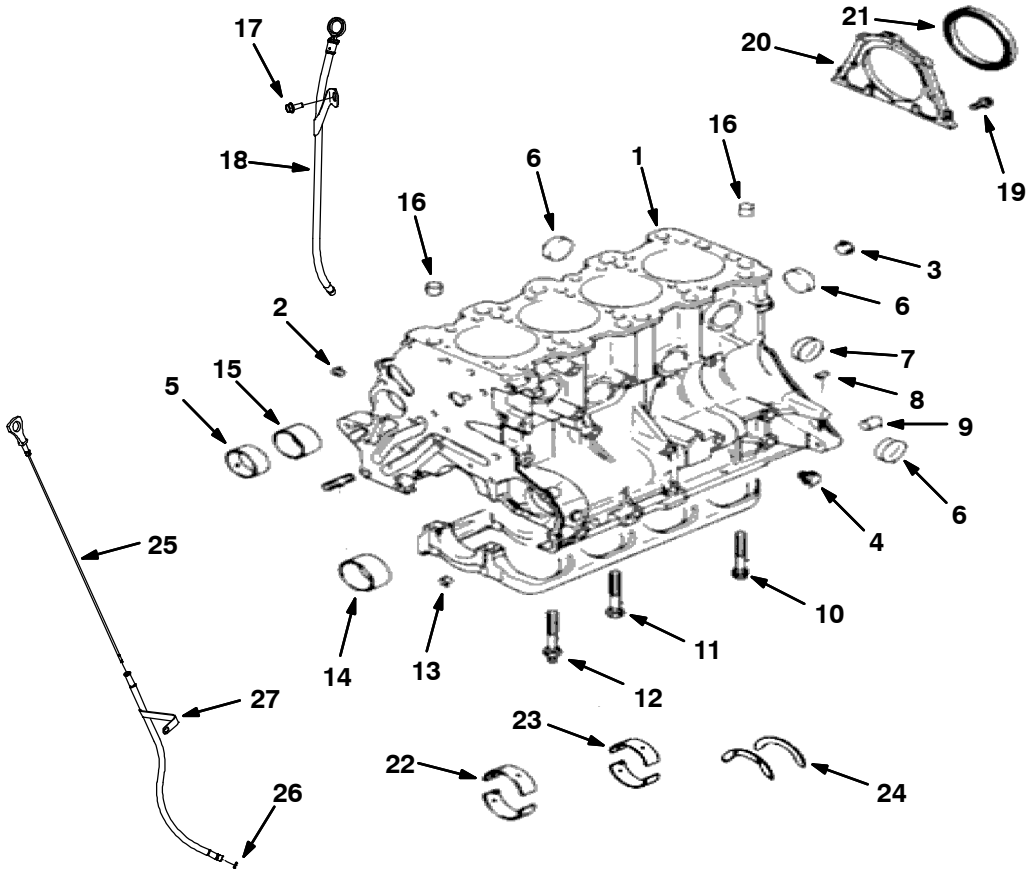

Fig. 1 – Cylinder Block Group

	Ref.	Part No.	Description	Qty.
▽	1	9015837	Block Assy, Cylinder	1
▲	2	9010420	Plug, Taper	2
▲	3	9010421	Plug, Taper	1
▲	4	9010422	Plug	1
▲	5	9010458	Bearing, Shaft, Std, Balancer	1
▲	5	9010459	Bearing, Shaft, Balancer [Ovrsz]	1
▲	6	9010424	Cap, Seal	7
▲	7	9010425	Cap, Seal	2
▲	8	9010426	Pin, Dowel	2
▲	9	9010427	Bushing, Knock	2
▲	10	9010428	Bolt, Cap, Bearing	2
▲	11	9010429	Bolt, Cap, Bearing	7
▲	12	9010430	Bolt, Cap, Bearing	1
▲	13	9010431	Bushing	2
▲	14	9010432	Bearing, Std, Balancer	1
▲	14	9010433	Bearing, Oversize [1.0]	1
▲	15	9010434	Bearing, Std, Balancer	1
▲	15	9010435	Bearing, Oversize [1.0]	1
▲	16	9010436	Bushing, Knock	2
	17	9010230	Bolt, Flange	1
	18	9015864	Dipstick Assy, Guage (LPG ONLY)	1
	19	9010444	Bolt, Flange	5
	20	9010445	Seal, Case, Oil, Rear	1
	21	9010446	Seal, Oil	1
	22	9010447	Bearing, Cshft [Green Std 1,2,4,5]	4
	22	9010448	Bearing, Cshft [Yellow Std 1,2,4,5]	4
	22	9010449	Bearing, Cshft[No Color Std 1,2,4,5]	4
	22	9010450	Bearing, Cshft [Lan Std 1,2,4,5]	4
	22	9010451	Bearing, Cshft [Red Std 1,2,4,5]	4
	23	9010452	Bearing, Cshft [Green Std 3]	1
	23	9010453	Bearing, Cshft [Yellow Std 3]	1
	23	9010454	Bearing, Cshft [No Color Std 3]	1
	23	9010455	Bearing, Cshft [Lan Std 3]	1
	23	9010456	Bearing, Cshft [Black Std 3]	1
	24	9010457	Bearing, Thrust, Cshft	1
	25	9015866	Dipstick, Oil (GAS ONLY)	1
	26	9010218	O–Ring, [Mit Buna–N 012] (GAS ONLY)	1
	27	9015883	Tube, Dipstick [2.4l Mit] (GAS ONLY)	1

Fig. 2 – Rocker Cover Group

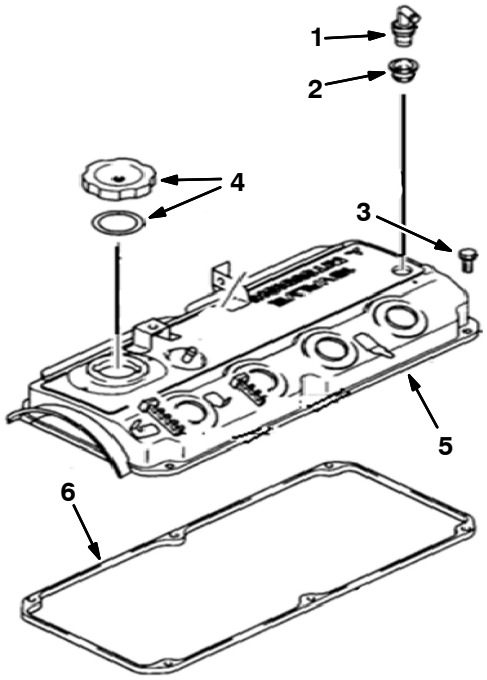

Ref.	Part No.	Description	Qty.
1	9010460	Valve, Pcv	1
2	9010461	Valve, Gasket, Pcv	1
3	9010462	Bolt, Rocker, Cover	6
4	9010464	Cap, Oil, Filler	1
5	9010466	Cover Assy, Rocker	1
6	9010465	Gasket, Cover, Rocker	1

Fig. 3 – Cylinder Head Group

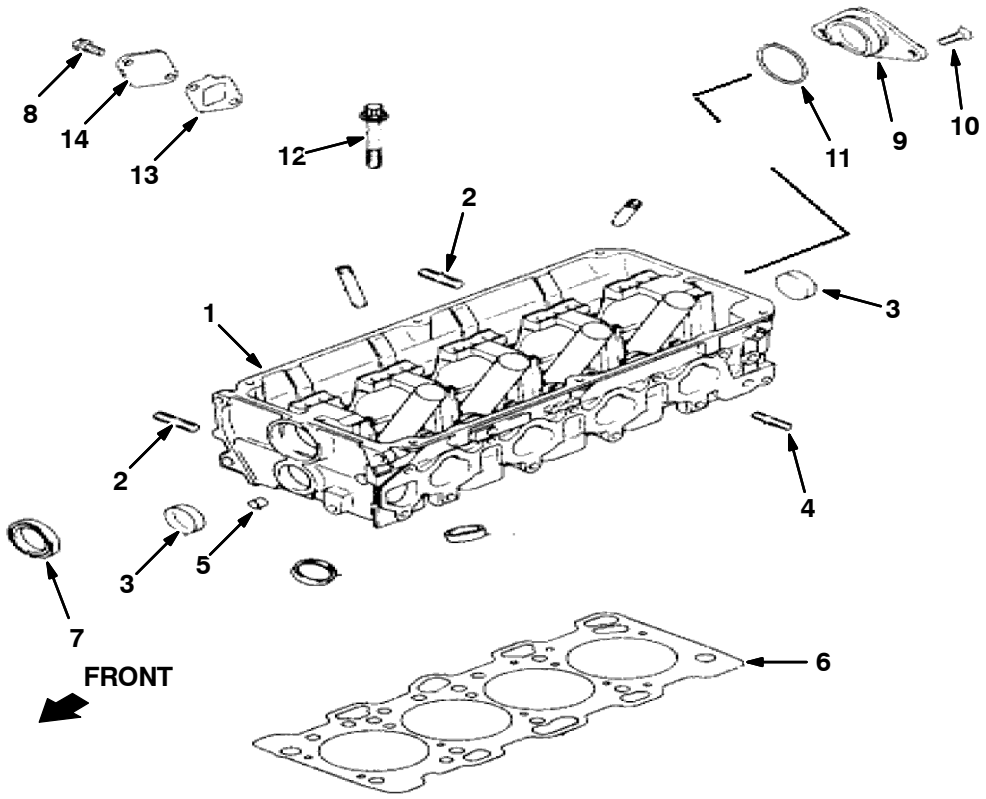

	Ref.	Part No.	Description	Qty.
▽	1	9014161	Head Assy, Cylinder[Mits 2015 12mm]	1
▲	2	9010473	Stud	2
▲	3	9010469	Seal, Cap	2
▲	4	9010470	Stud	3
▲	5	9010431	Bushing	2
	6	9015840	Gasket, Head, Cyl [2.4l Mit]	1
	7	9010471	Seal, Cam Shaft, Front	1
	8	9010441	Bolt, Flange	2
	9	9010480	Thurst, Case	1
	10	9010481	Screw	2
	11	9010482	O−Ring	1
	12	9010484	Cylinder Assy, Head, Bolt	10
	13	9010483	Gasket	1
	14	9010485	Cover	1

Fig. 4 – Front Cover and Oil Pan Group

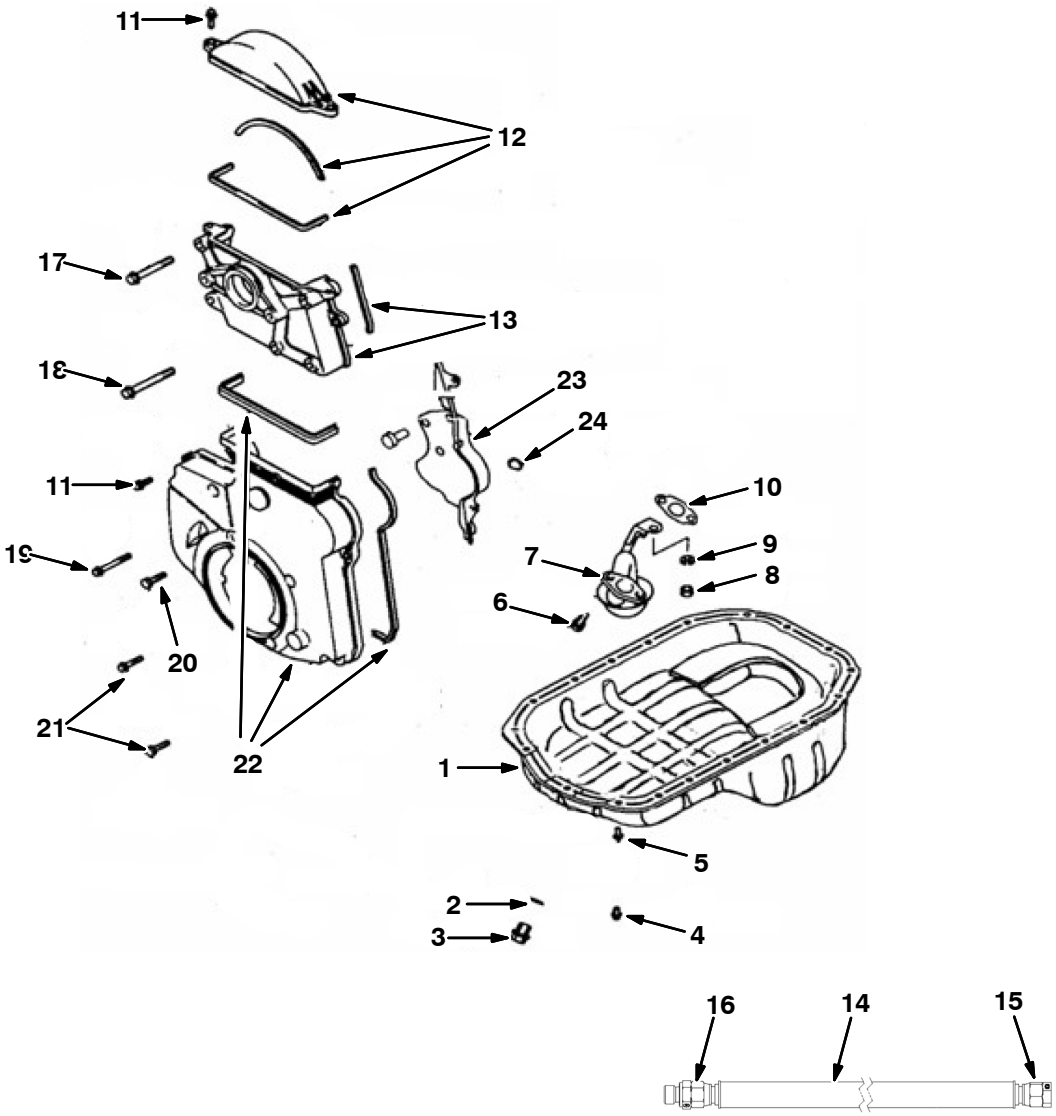

Fig. 4 – Front Cover and Oil Pan Group

	Ref.	Part No.	Description	Qty.
▽	1	9010487	Pan, Oil	1
▲	2	9010488	Gasket, Plug, Drain, Oil	1
▲	3	9010489	Plug, Oil, Drain	1
	4	9010490	Bolt, Flange	17
	5	9010491	Bolt, Flange	2
	6	9010492	Washer, Bolt	2
	7	9010493	Screen, Oil	1
	8	9010494	Nut, Strainer	1
	9	9010495	Washer, Strainer	1
	10	9010496	Gasket, Screen	1
	11	9010497	Bolt, Flange	8
	12	9010498	Cover Assy, Front, Upper [T−Belt]	1
	13	9010502	Bracket Assy, Coil, Ignition	1
	14	9015930	Hose, Drain, Oil [2.4l Mit]	1
	15	9015931	Plug [2.4l Mit]	1
	16	9015932	Fitting [2.4l Mit]	1
	17	9010503	Bolt, Flange	3
	18	9010504	Bolt, Flange	1
	19	9010505	Bolt, Flange	1
	20	9010506	Bolt	2
	21	9010507	Bolt	2
	22	9010508	Cover, Lower, Front [T−Belt]	1
	23	9015839	Cover, Rear, T−Belt [2.4l Mit]	1
	24	9010512	Plug, Rubber	1

Fig. 5 – Camshaft and Valve Group

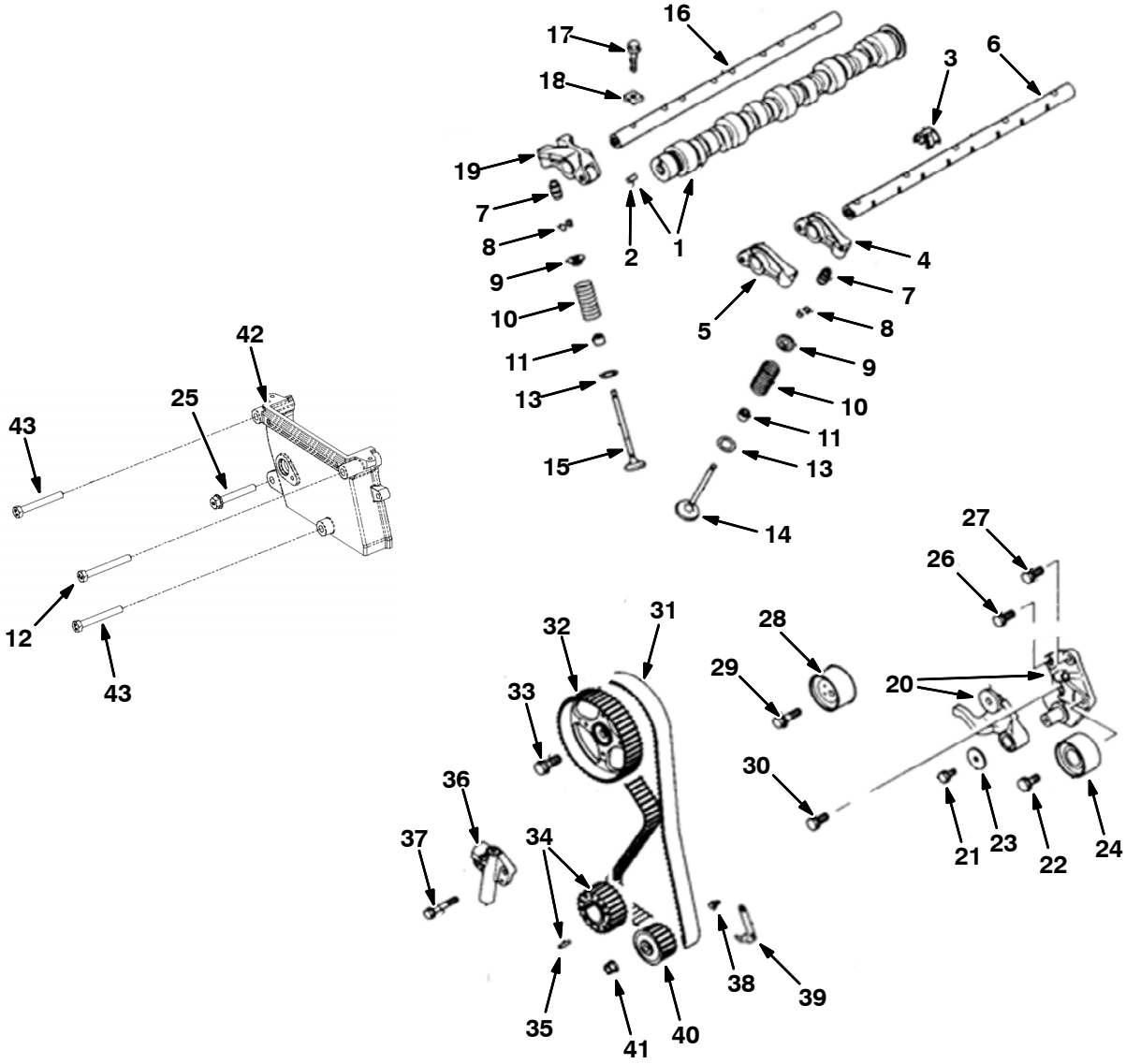

Fig. 5 – Camshaft and Valve Group

	Ref.	Part No.	Description	Qty.
▽	1	9015910	Camshaft Assy	1
▲	2	9010535	Pin, Dowel	1
	3	9010532	Shaft, Spring, Rocker	4
	4	9010533	Arm Assy, Rocker [B]	4
	5	9010534	Arm Assy, Rocker [A]	4
	6	9010531	Shaft, Arm , Rocker	1
	7	9010536	Adjuster Assy, Lash	16
	8	9010537	Valve, Spring, Lock	32
	9	9010538	Valve, Spring, Retainer	16
	10	9010539	Valve, Spring	16
	11	9010540	Valve, Seal, Stem	16
	12	9015920	Bolt [2.4l Mit]	1
	13	9010541	Valve, Spring, Seat	16
	14	9010542	Valve, Inlet	8
	15	9010543	Valve, Exhaust	8
	16	9010544	Shaft, Arm, Rocker	1
	17	9010545	Bolt, Flange	13
	18	9010546	Shaft, Cap, Rocker	13
	19	9010547	Arm Assy, Rocker [C]	4
▽	20	9010548	Bracket, Pulley, Tensioner	1
▲	21	9010549	Bolt, Washer	1
▲	22	9010550	Bolt, Washer	1
▲	23	9010551	Washer	1
▲	24	9010552	Pulley, Idler	1
	25	9010254	Bolt, M8–1.25 X 55 Fi Hd [Mit]	1
	26	9010554	Bolt, Seal	1
	27	9010555	Bolt, Washer	1
	28	9010556	Pulley, Tensioner	1
	29	9010557	Bolt, Washer	1
	30	9010550	Bolt, Washer	1
	31	9015868	Belt, Timing [2.4l Mit]	1
	32	9015855	Sprocket, Camshaft [2.4l Mit]	1
	33	9010561	Bolt, Flange	1
▽	34	9010562	Sprocket Assy, Cshft	1
▲	35	9015856	Pin, Spring [2.4l Mit]	1
	36	9010564	Tensioner	1
	37	9010565	Bolt, Flange	2
	38	9010491	Bolt, Flange	2
	39	9010567	Bracket, Indicator, Timing	1
	40	9010568	Sprocket, Pump, Oil	1
	41	9010569	Nut	1
	42	9015869	Cover, Timing, Gear [2.4l Mit]	1
	43	9010251	Bolt, M8–1.25 X 65 Hxhd [Mit]	2

Fig. 6 – Piston and Crankshaft Group

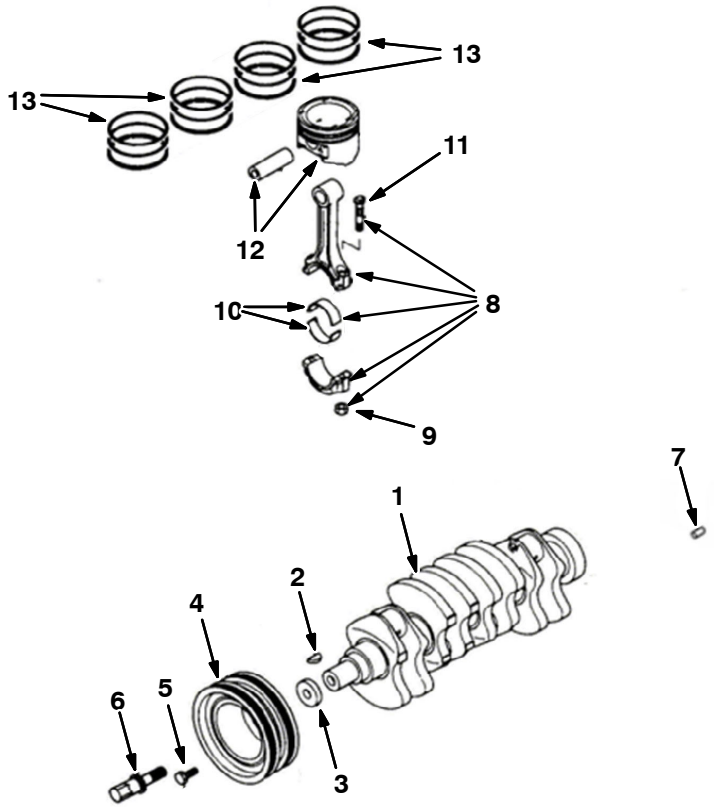

	Ref.	Part No.	Description	Qty.
	1	9015846	Crankshaft Assy [2.4l Mit]	1
	2	9010514	Key	1
	3	9010515	Washer, Special	1
	4	9010516	Pulley Assy, Damper, Torsional	1
	5	9010517	Bolt, Washer	4
	6	9010518	Bolt, Sprocket, Cshft	1
	7	9010519	Pin, Dowel	1
▽	8	9010520	Rod Assy, Connecting	4
▲	9	9010521	Nut	8
▲	10	9010522	Bearing, Rod, Connect [Yellow Std]	4
▲	10	9010523	Bearing, Rod, Connect [No Color Std]	4
▲	10	9010524	Bearing, Rod, Connect [Lan Std]	4
▲	11	9010525	Bolt, Connecting	8
	12	9015841	Piston Assy, W/ Pin [Std A/2.4l Mit]	4
	12	9015844	Piston Assy, W/ Pin [Std B/2.4l Mit]	4
	12	9015845	Piston Assy, W/ Pin [Std C/2.4l Mit]	4
	13	9015854	Ring Set, Piston [2.4l Mit]	1

Fig. 7 – Balancer Group

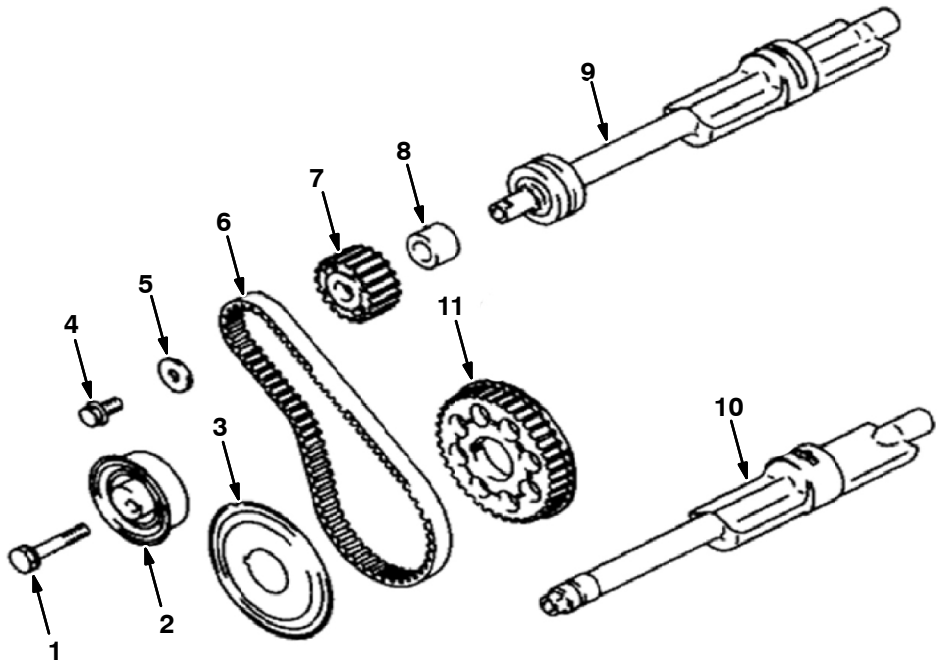

Ref.	Part No.	Description	Qty.
1	9010570	Bolt, Belt, Balancer, Train	1
2	9010571	Tensioner, Timing, Belt	1
3	9010572	Flange, Sprocket, Cshft	1
4	9010600	Bolt, Flange	1
5	9010574	Washer, Belt, Balancer, Train	1
6	9010575	Belt, Timing	1
7	9010576	Sprocket, Shaft, Balancer	1
8	9010577	Spacer, Belt, Balancer, Train	1
9	9015858	Shaft, Rh [Counter Bal, 2.4l Mit]	1
10	9015857	Shaft, Lh [Counter Bal, 2.4l Mit]	1
11	9010580	Sprocket, Cshft	1

Fig. 8 – Oil Pump and Pressure Switch Group

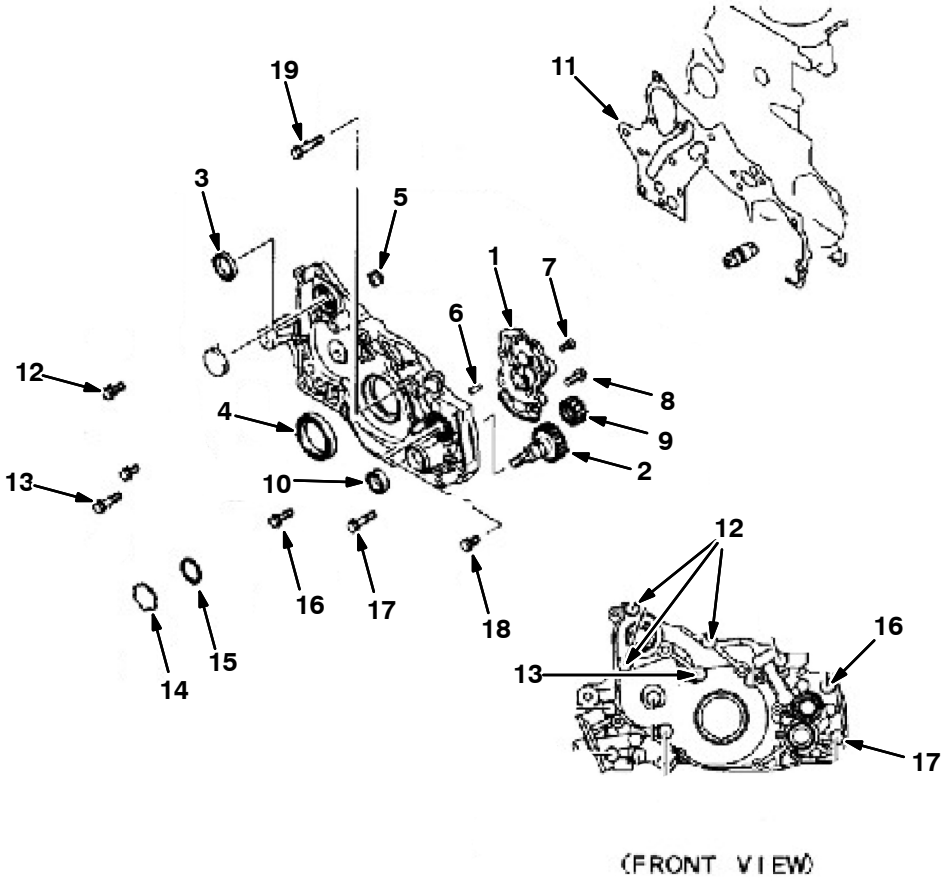

	Ref.	Part No.	Description	Qty.
▽	1	9010582	Pump, Oil	1
▲	2	9010592	Pump, Gear, Drive, Oil	1
▲	3	9010585	Seal, Oil	1
▲	4	9010586	Seal, Oil	1
▲	5	9010587	Plug, Tapper	1
▲	6	9010426	Pin, Dowel	2
▲	7	9010589	Screw	1
▲	8	9010590	Bolt, Flange	4
▲	9	9010591	Pump, Gear, Oil	1
▲	10	9010601	Seal, Oil	1
	11	9010593	Gasket, Case, Front	1
	12	9010594	Bolt, Washer	3
	13	9010595	Bolt, Washer	1
	14	9010596	Plug, Cap	1
	15	9010597	O–Ring	1
	16	9010598	Bolt, Flange	1
	17	9010599	Bolt, Flange	1
	18	9010600	Bolt, Flange	1
	19	9010583	Bolt, Flange	1

Fig. 9 – Water Pump Group

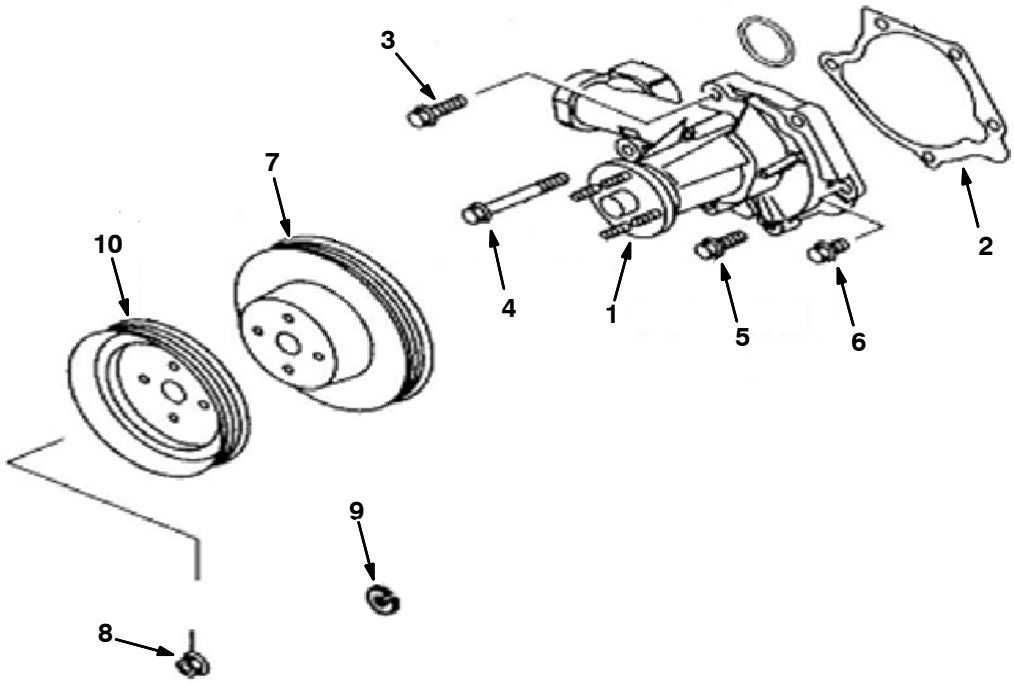

Ref.	Part No.	Description	Qty.
1	9010602	Pump, Water	1
2	9010603	Gasket, Pump, Water	1
3	9010604	Bolt, Flange	1
4	9010503	Bolt, Flange	1
5	9010606	Bolt, Flange	2
6	9010607	Bolt, Flange	1
7	9010612	Pulley, Pump, Water	1
8	9010609	Nut, Flange	4
9	9010610	Washer, Spring	4
10	9015849	Pulley, Water Pump [2.4l Mit]	1

Fig. 10 – Intake Manifold Gasket Group

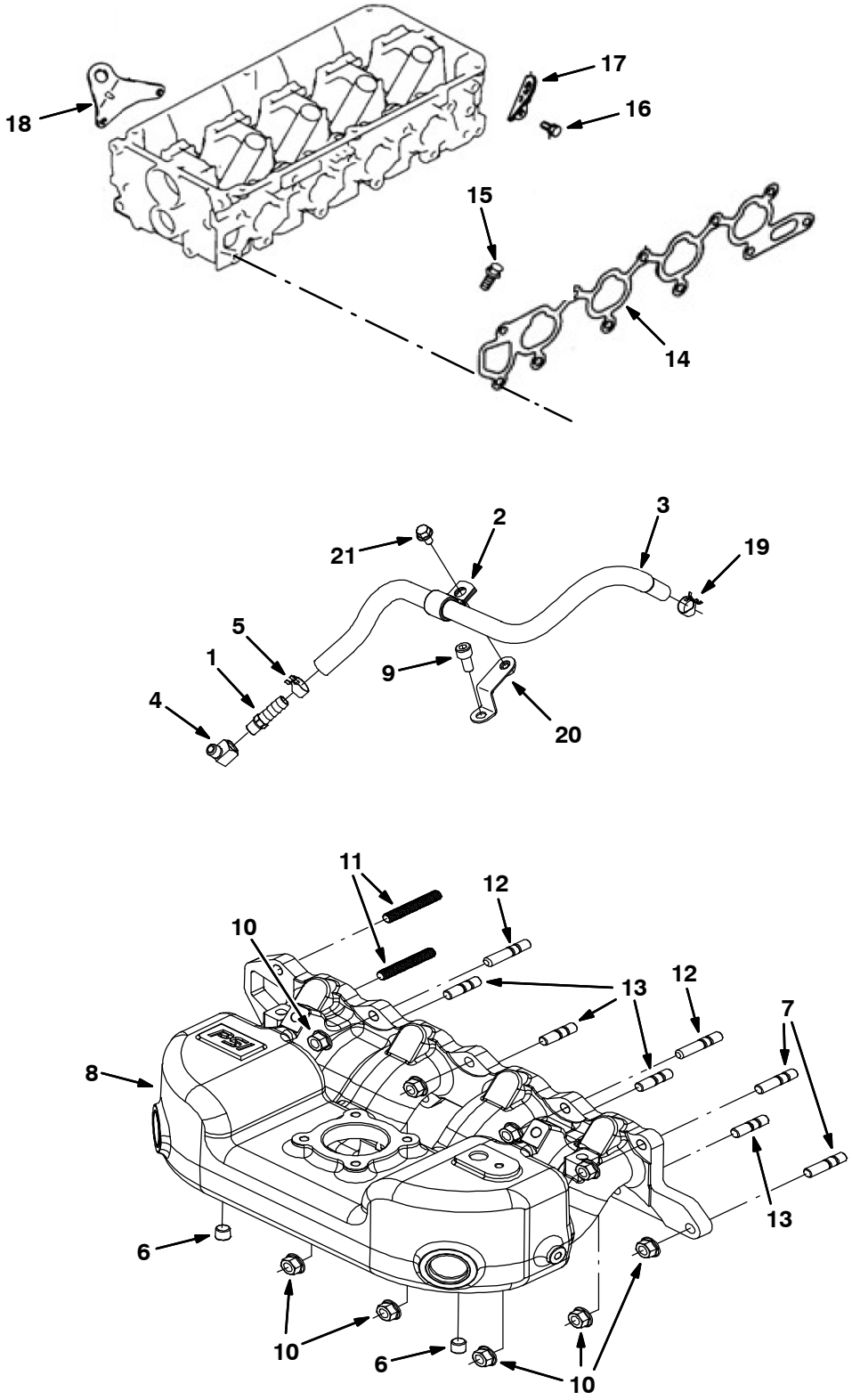

Fig. 10 – Intake Manifold Gasket Group

Ref.	Part No.	Description	Qty.
1	9010382	Fitting, 1/8 Mpt X 3/8 Hb [Mit]	1
2	9015929	Clamp [2.4l Mit]	1
3	9015905	Hose, Air [2.4l Mit]	1
4	9010383	Elbow, 1/8m X 1/8f, 90 [Mit]	1
5	9010282	Clamp, 3/8id [Mit Olive Green]	1
6	9010314	Plug, 1/8 Npt, Brs, Skt Hd [Mit]	1
7	9015914	Stud [2.4l Mit]	2
8	9015909	Manifold, Intake [2.4l Mit]	1
9	9010327	Bolt, M8–1.25 X 16, Soc Hd [Mit]	1
10	385015	Nut, Flng, M8	9
11	9010287	Stud, M8–1.25 X 50 Full Thrd [Mit]	2
12	9010288	Stud, M8–1.25 X 35 [Mit Double End]	2
13	9010384	Stud, M8–1.25 X 30 [Mit Double End]	4
14	9010613	Gasket, Manifold, Intake	1
15	9010606	Bolt, Flange	2
16	9010615	Bolt, Manifold, Inlet	1
17	9010617	Hanger, Engine	1
18	9010618	Hanger, Engine	1
19	9015897	Clamp [2.4l Mit]	1
20	9015906	Bracket, Pcv Line [2.4l Mit]	1
21	9010262	Bolt, M6–1.0 X 10 Fl Hd [Mit]	1

Fig. 11 – Exhaust Manifold Gasket Group

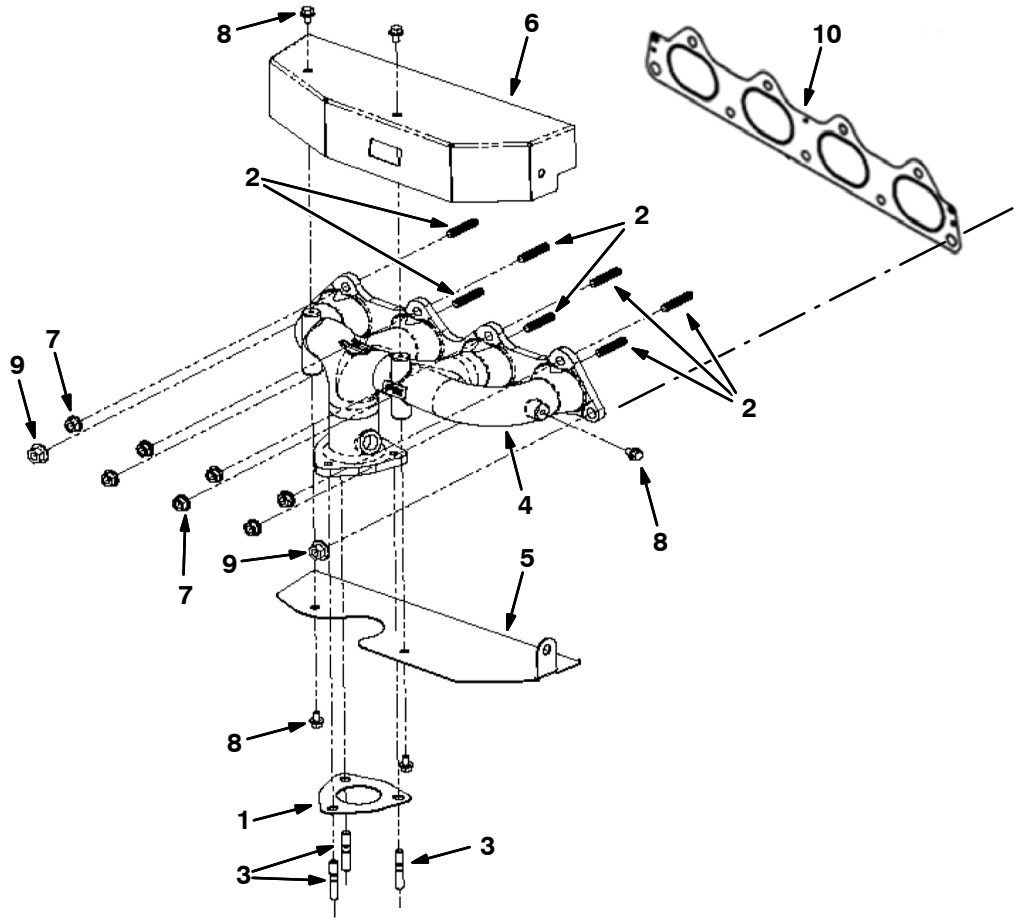

Ref.	Part No.	Description	Qty.
1	9010296	Gasket, Manifold, Exh [Mit]	1
2	9015871	Stud [2.4l Mit]	7
3	9015902	Stud [2.4l Mit]	3
4	9010298	Manifold, Exhaust [Mit 2.0/2.4l]	1
5	9010302	Shield, Heat, Lower [Mit 20/24m]	1
6	9010303	Shield, Heat, Upper [Mit 20/24m]	1
7	9015915	Nut [2.4l Mit]	7
8	9010262	Bolt, M6–1.0 X 10 Fl Hd [Mit]	5
9	9015916	Nut [2.4l Mit]	2
10	9010619	Gasket, Manifold, Exhaust	1

Fig. 12 – Pump Mount Group

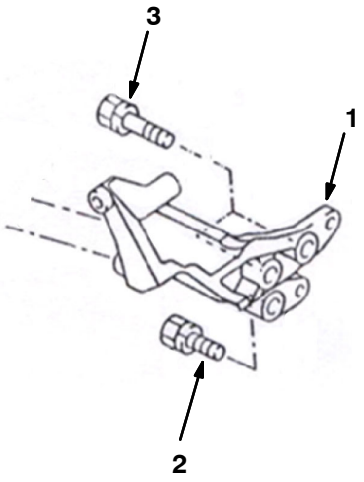

Ref.	Part No.	Description	Qty.
1	9010623	Bracket, Pump, Mtg	1
2	9010624	Bolt, Washer	1
3	9010625	Bolt, Washer	2

Fig. 13 – Flywheel Group

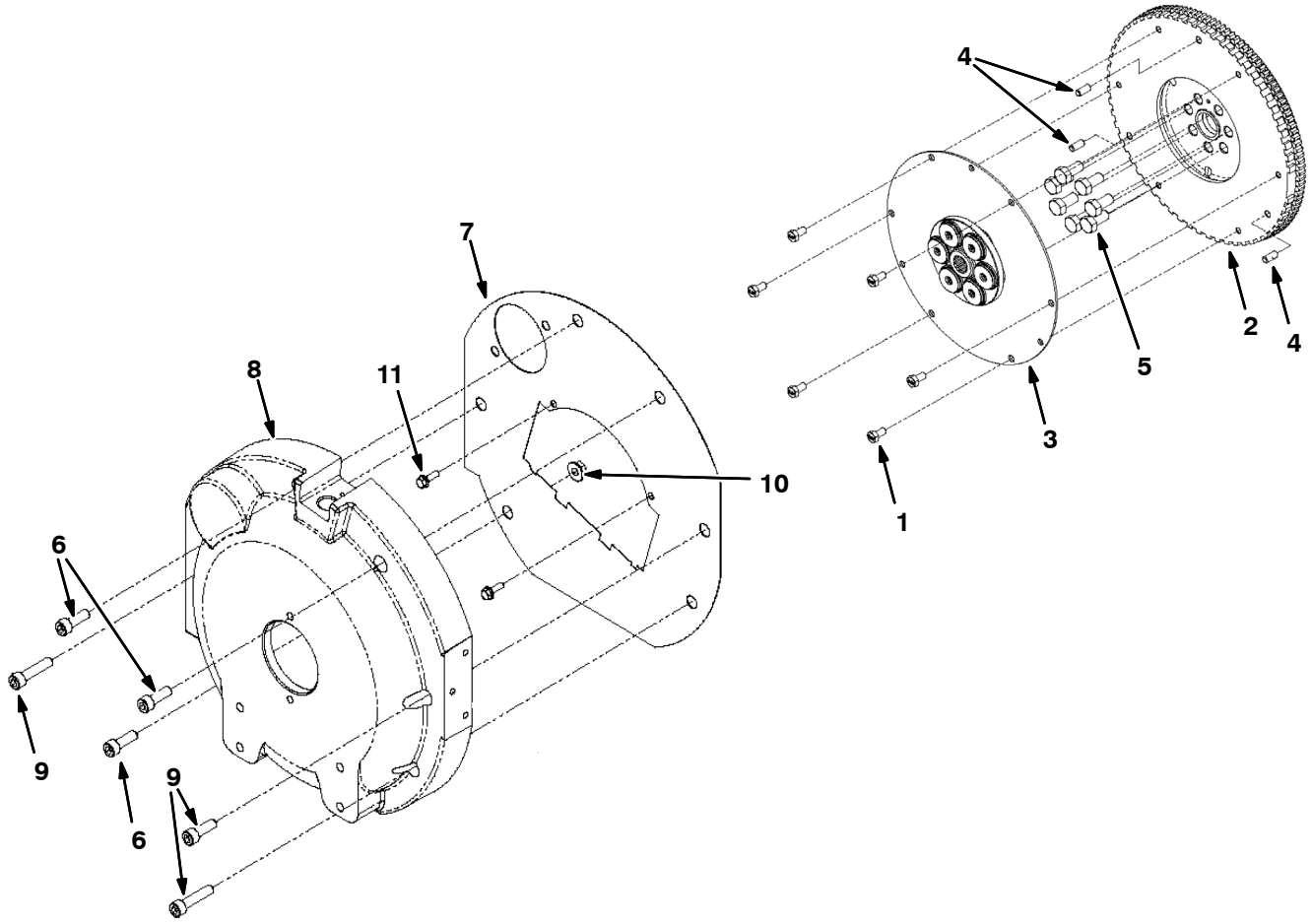

Ref.	Part No.	Description	Qty.
1	9015919	Bolt, Hex Cap [2.4l Mit]	6
2	9010233	Flywheel, Flatface [Mit 20/24m]	1
3	9015865	Plate, Drive [2.4l Mit]	1
4	9010235	Pin, Flywheel [Mit 20/20m]	3
5	9010236	Bolt, Flywheel [Mit 20/24m]	7
6	9010241	Bolt, M10–1.25 X 30 Soc Hd [Mit]	3
7	9010237	Cover, Dust [Mit 2.0l]	1
8	9015927	Housing, Flywheel [2.4l Mit]	1
9	9010242	Bolt, M10–1.25 X 45 Soc Hd [Mit]	3
10	9010239	Nut, M10–1.25 Flg [Mit]	3
11	9010262	Bolt, M6–1.0 X 10 Fl Hd [Mit]	3

Fig. 14 – Ignition Coil and Spark Plug Group

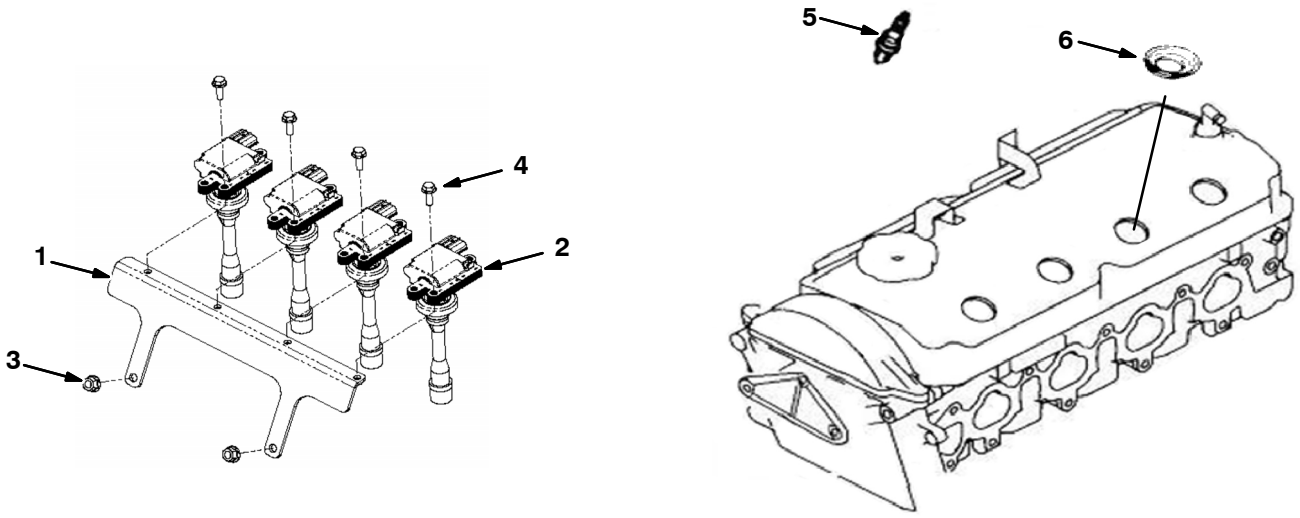

Ref.	Part No.	Description	Qty.
1	9015890	Bracket [2.4l Mit]	1
2	9010244	Coil, Ignition, W/ Boot [2.4l Mit]	4
3	9010286	Bolt, M6–1.0 X 10 Fl Hd [Mit]	2
4	9010240	Bolt, M6–1.0 X 20 Fl Hd [Mit]	4
5	9014160	Plug, Spark [Mitsubishi 2015 12mm]	4
6	9010479	Seal, Oil	4

Fig. 15 – Starter / Alternator Group

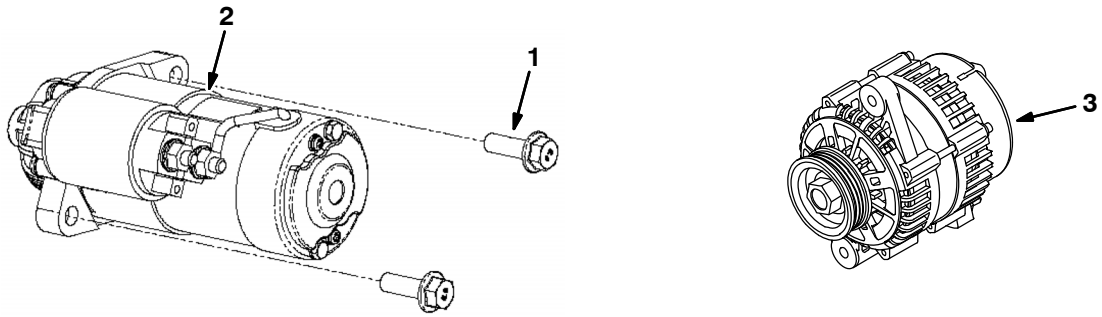

Ref.	Part No.	Description	Qty.
1	9015921	Bolt [2.4l Mit]	2
2	9015894	Starter, Motor [2.4l Mit]	1
3	9015891	Alternator, 95a	1

Fig. 16 – Remote Oil Filter Group

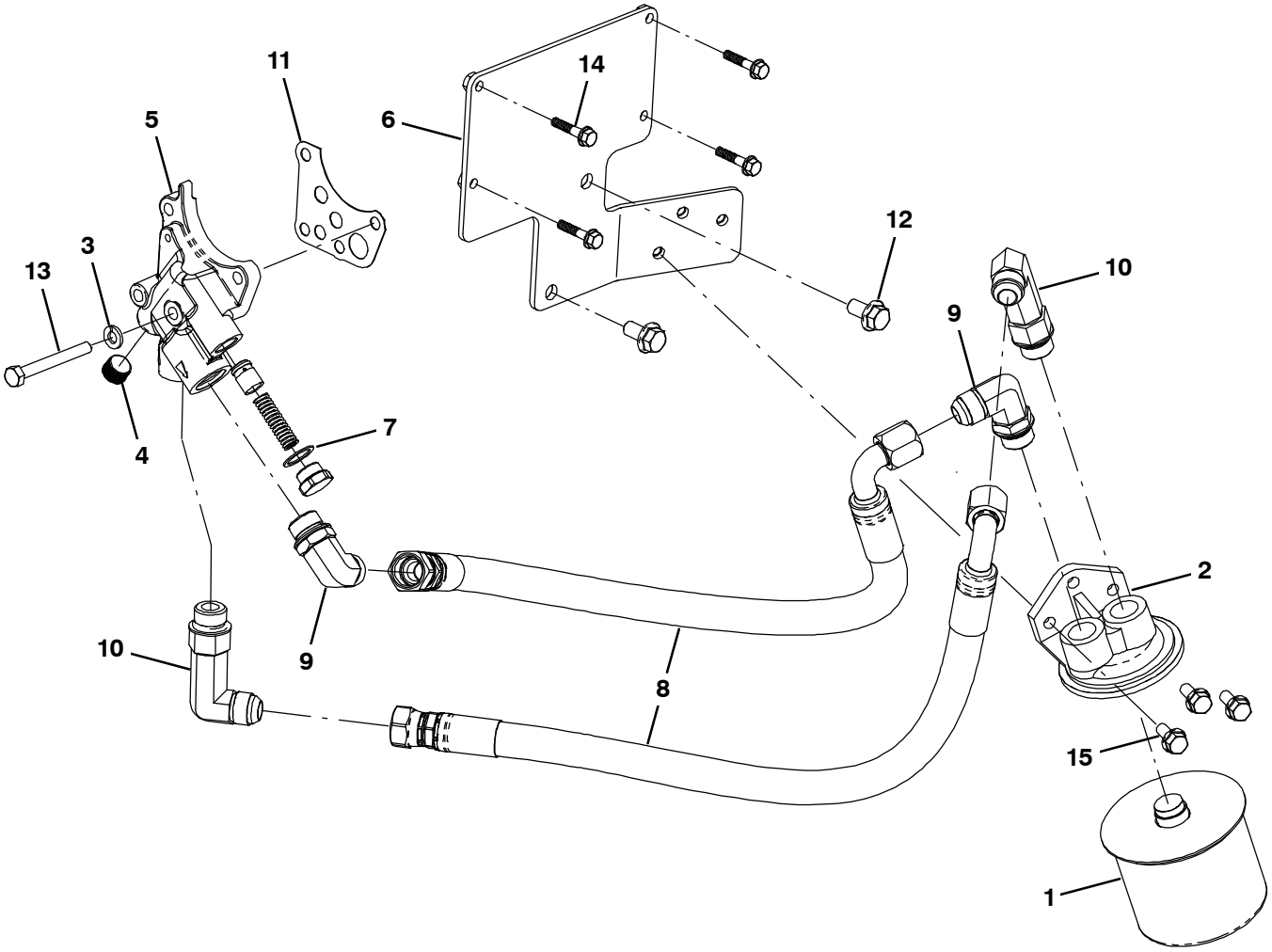

Ref.	Part No.	Description	Qty.
1	393982	Element, Fltr, Oil, Spin–On	1
2	371503	Mount, Fltr, Remote	1
3	9010252	Washer, Lock, M8 [Mit]	1
4	9010372	Plug, 3/8npt X 5/16, Brs [Mit]	1
5	9015880	Adapter, Oil Fltr, Remote [2.4l Mit]	1
6	9015886	Bracket, Fltr, Oil, Remote [2.4l Mit]	1
7	9015879	Gasket, Relief Valve [2.4l Mit]	1
8	9010376	Hose, 90xstr,Flter, Oil, Remote[Mit]	2
9	9010628	Elbow	2
10	9010629	Elbow	2
11	9010377	Gasket, Oil, Adapter [Mit 2.0/2.4]	1
12	9010265	Bolt, M10–1.25 X 20 Fl Hd [Mit]	2
13	9010253	Bolt, M8–1.25 X 70 Hxhd [Mit]	1
14	9010249	Bolt, M6–1.0 X 30 Fl Hd [Mit]	4
15	9010230	Bolt, M8–1.25 X 20 Fl Hd [Mit]	3

Fig. 17 – Coolant Group

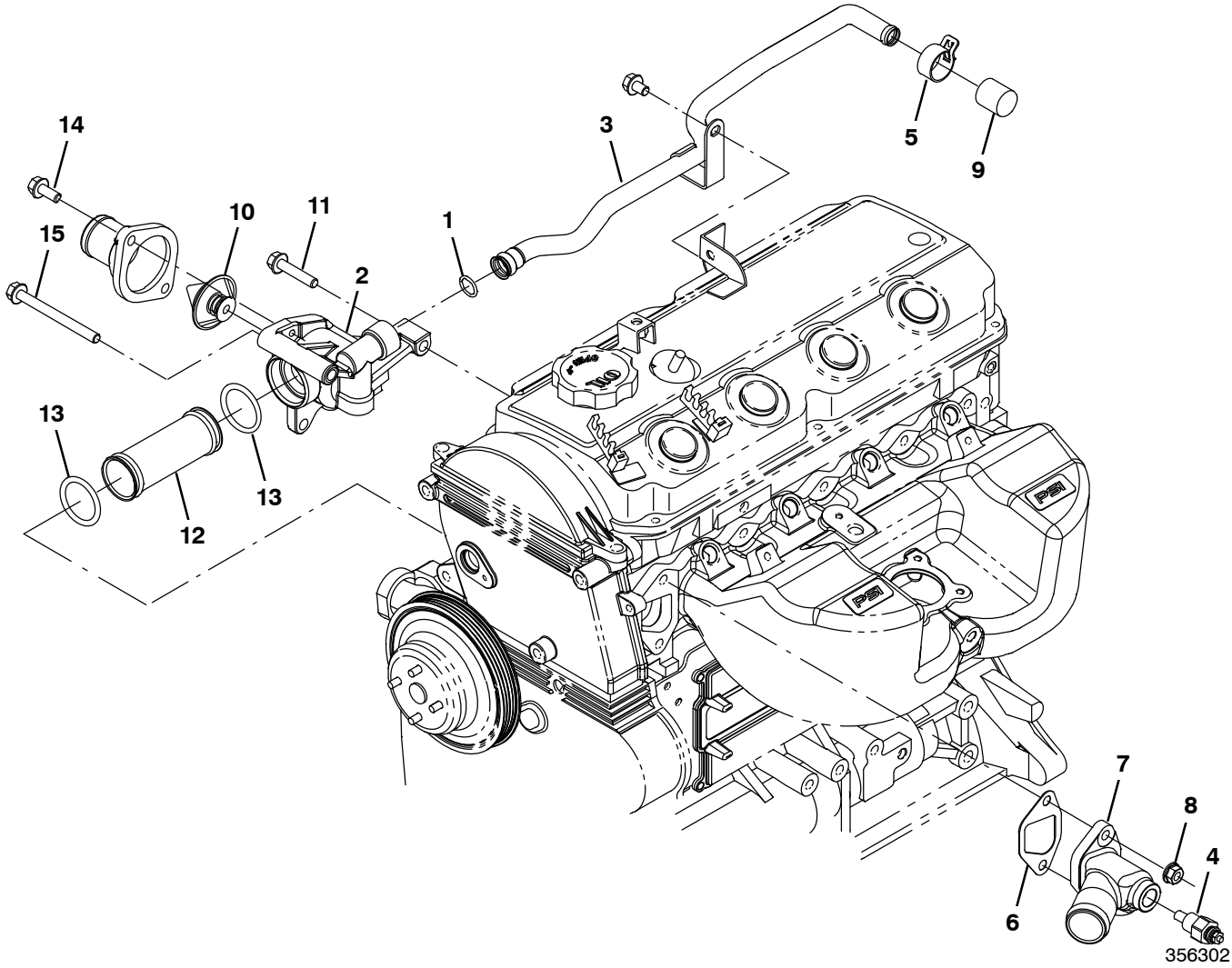

Ref.	Part No.	Description	Qty.
1	9015875	Seal, Org	1
2	9010290	Housing, T–Stat, 2 Holes [Mit]	1
3	9010291	Tube, Water, Line [Mit]	1
4	372472	Sensor, Temp	1
5	384979	Clamp, Hose, Spring, 0.62d	1
6	9015896	Gasket, W/ Outlet [2.4l Mit]	1
7	9015901	Fitting, Water Outlet [2.4l Mit]	1
8	385015	Nut, Flng, M8	2
9	9015874	Cap	1
10	9010905	Thermostat Kit, Coolant, Replmt [Mitsub]	1
11	9010583	Bolt, Flange	1
12	9010910	Tube, Pump, Water	1
13	9013530	Seal, Tube, Water [Mit 2.0l]	2
14	9010594	Bolt, Washer	1
15	9015848	Bolt, Water Line [2.4l Mit]	1

Fig. 18 – DSR Coolant Group, LPG Engine

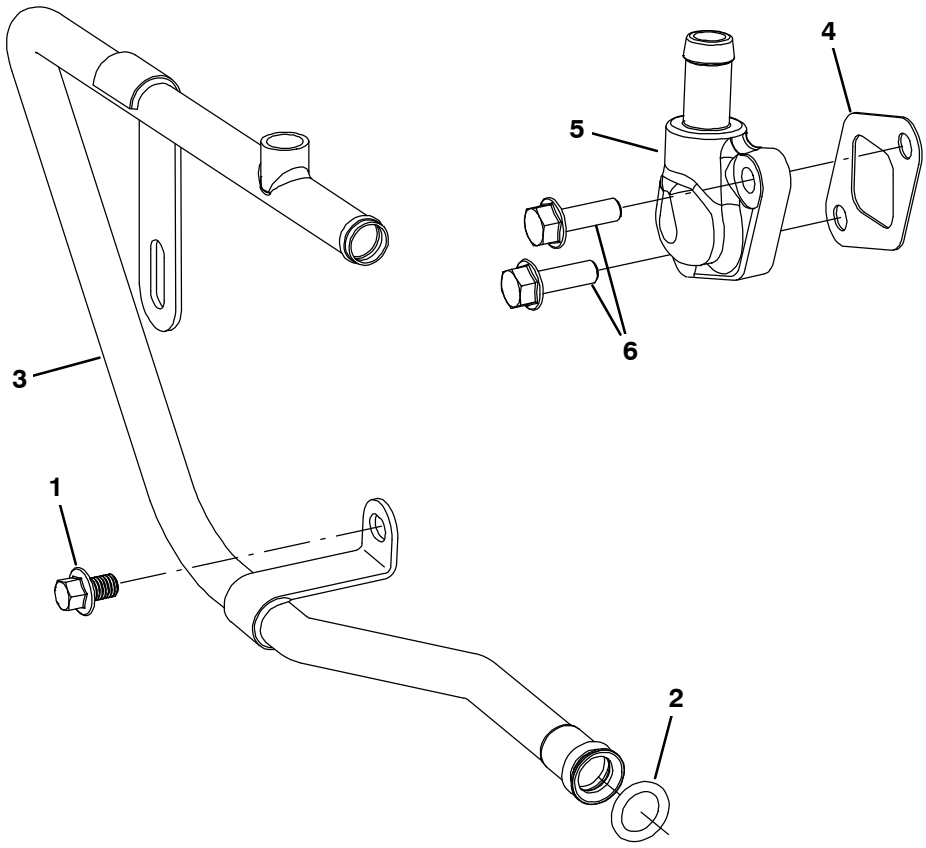

Ref.	Part No.	Description	Qty.
1	9015918	Bolt [2.4l Mit]	1
2	9010289	O–Ring [Mit 208 Buna–N]	1
3	9015872	Tube, Coolant [2.4l Mit]	1
4	9010307	Gasket, Water Supply [Mit 2.0/2.4l]	1
5	9015870	Fitting, Bypass, Water [2.4l Mit]	1
6	9010310	Bolt, M8–1.25 X 25 Flg Hd [Mit]	2

Fig. 19 – Electrical Group

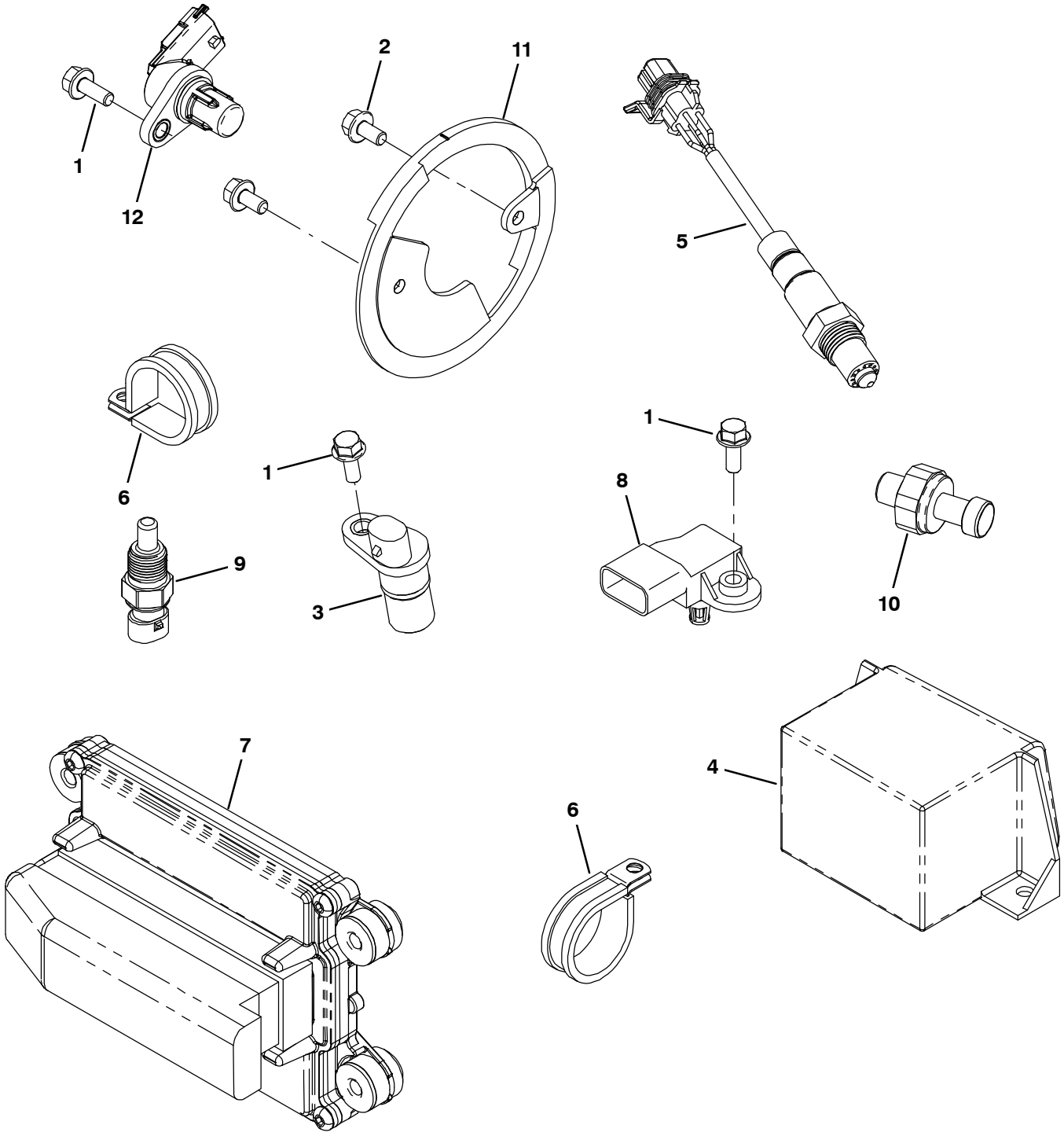

Fig. 19 – Electrical Group

Ref.	Part No.	Description	Qty.
1	9010263	Bolt, M6–1.0 X 16 Fl Hd [Mit]	3
2	9015917	Bolt [2.4l Mit]	2
3	372492	Sensor, Spd, Timing Wheel [3.0l]	1
4	1075151	Harness, Eng [Mit, Gas, 2.4l, 2016]	1
4	1075152	Harness, Eng [Mit, Lpg, 2.4l, 2016]	1
5	1028558	Sensor, Oxygen, Tailpipe	1
6	9010257	Clamp, 1/4 Hole [Mit #20]	2
7	9015925	Controller [2.4 Mit Gas]	1
7	9015926	Controller [2.4 Mit Lpg]	1
8	372493	Sensor [Tmap]	1
9	372891	Sensor, Temp, Coolant	1
10	9016137	Sensor, Camshaft, Ph [2.4l Mit]	1
11	9010261	Cam, Sensor, Wheel [Mit 2.0/2.4l]	1
12	9010259	Sender, Oil, Press [Mit]	1

Fig. 20 – Fuel Rail Group, Gasoline Engine

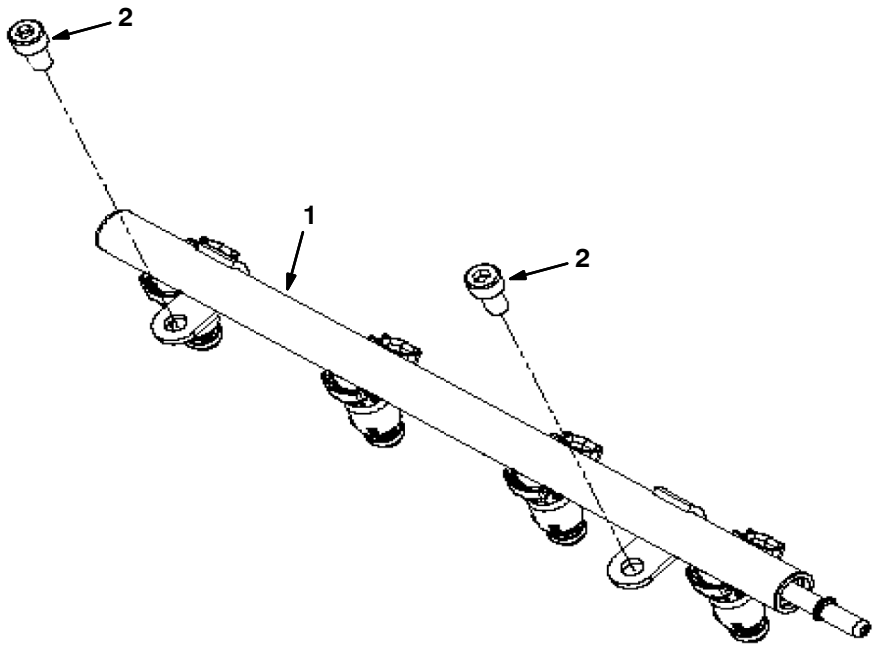

Ref.	Part No.	Description	Qty.
1	9015878	Manifold, Fuel [2.4l Mit]	1
2	9010327	Bolt, M8–1.25 X 16, Soc Hd [Mit]	2

Fig. 21 – Throttle Body Group, Gasoline Engine

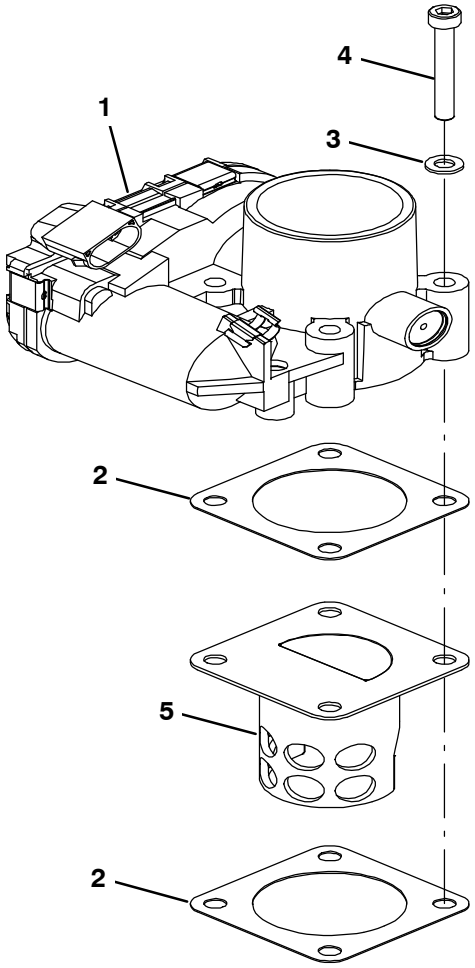

Ref.	Part No.	Description	Qty.
1	9010266	Throttle Body [Mit , Bosch]	1
2	9010268	Gasket, Throttle [Mit 40mm]	2
3	9015913	Washer, Flat [2.4l Mit]	4
4	9015911	Screw [2.4l Mit]	4
5	9015907	Damper, Intake [2.4l Mit]	1

Fig. 22 – Throttle Body Group, LPG Engine

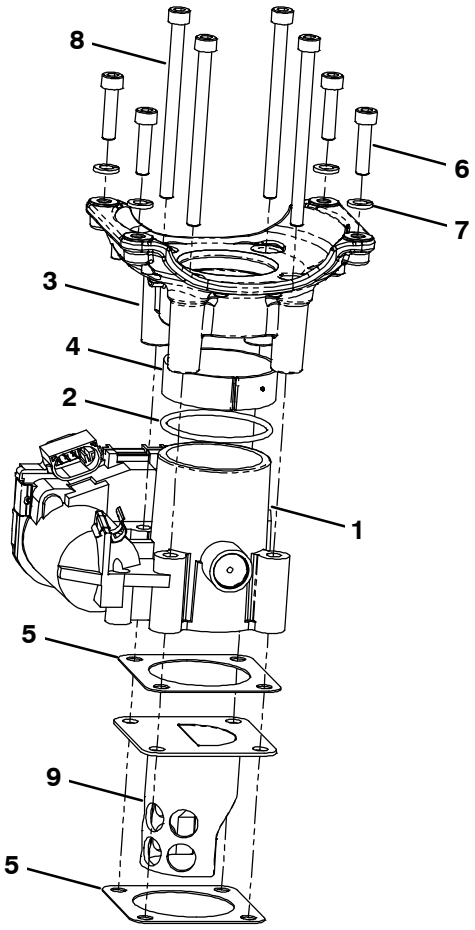

Ref.	Part No.	Description	Qty.
1	9010266	Throttle Body [Mit , Bosch]	1
2	1037311	Seal, Org, Lpg, Mixer	1
3	9006619	Adapter	1
4	9010267	Spacer, Ring, Throttle [Mit 40mm]	1
5	9010268	Gasket, Throttle [Mit 40mm]	2
6	9010269	Bolt, M6–1.0 X 25 Soc Hd [Mit]	4
7	9010270	Washer, Lock, M6 [Mit]	4
8	9010271	Bolt, M6–1.0 X 85 Soc Hd [Mit]	4
9	9015907	Damper, Intake [2.4l Mit]	1

Fig. 23 – PCV Fresh Air Hose Group, LPG Engine

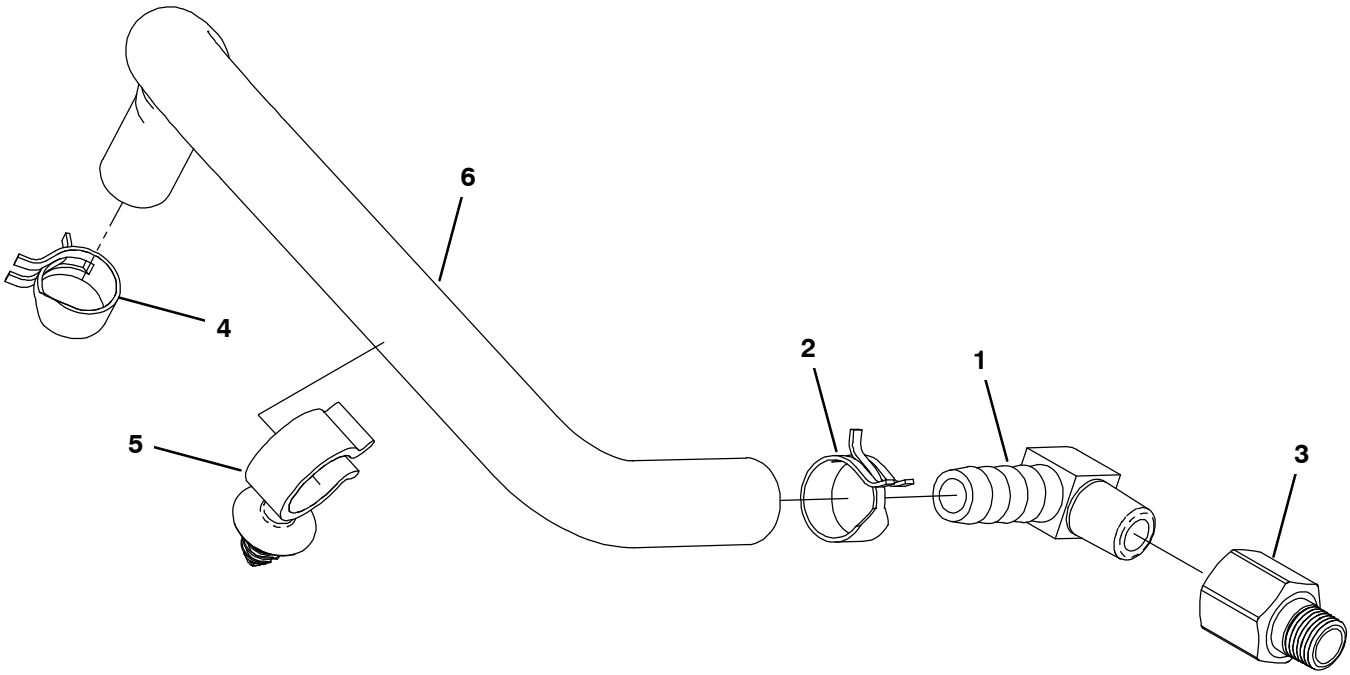

Ref.	Part No.	Description	Qty.
1	372510	Fitting, E90	1
2	9010282	Clamp, 3/8id [Mit Olive Green]	1
3	9015887	Fitting, Switch, Oil Press[2.4l Mit]	1
4	9015897	Clamp [2.4l Mit]	1
5	9015908	Clip [2.4l Mit]	1
6	9015900	Mount, Hose Clip [2.4l Mit]	1

Fig. 24 – Vaporizer Group, LPG Engine

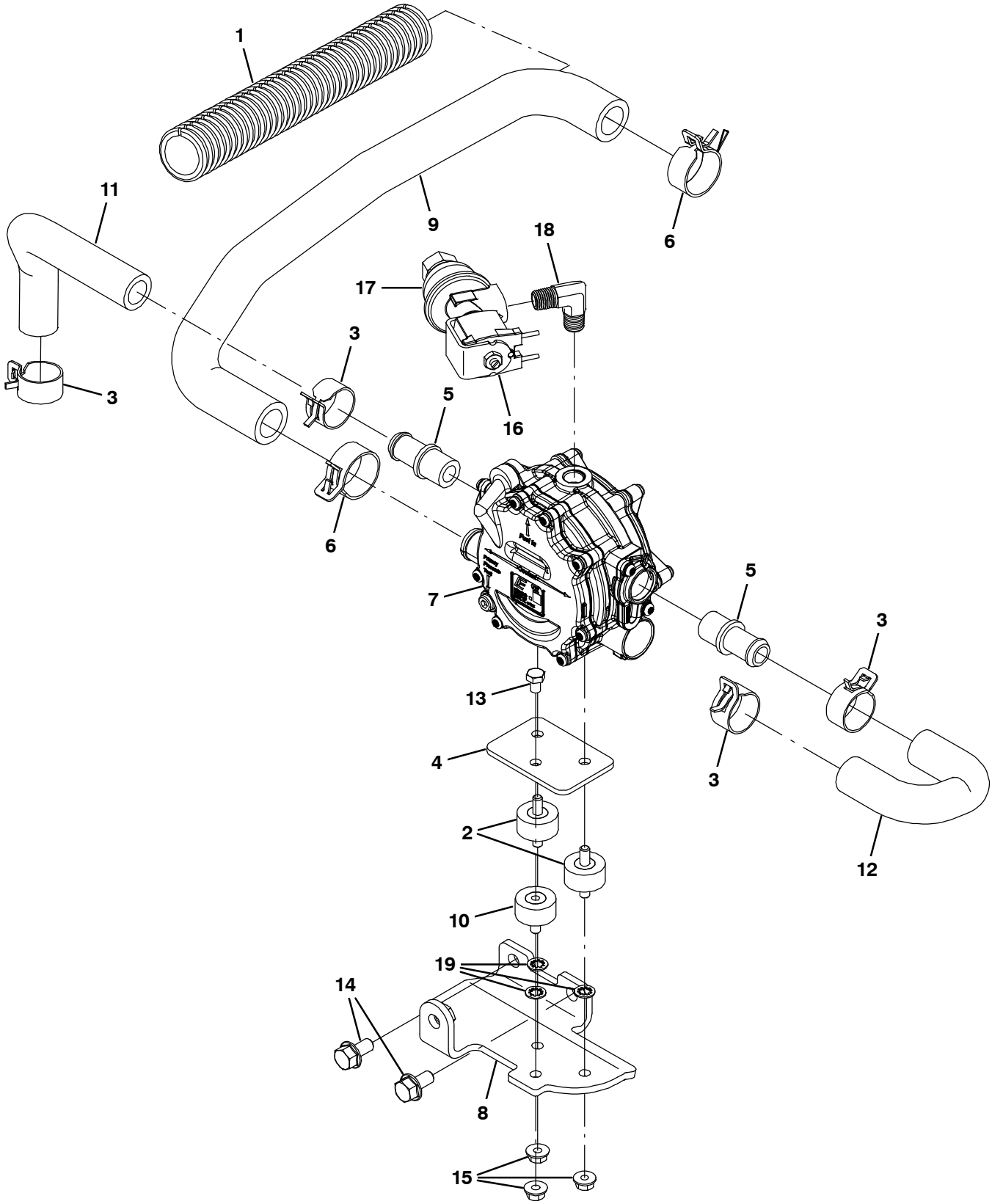

Fig. 24 – Vaporizer Group, LPG Engine

	Ref.	Part No.	Description	Qty.
	1	9015867	Harness, Split [2.4l Mit]	1
	2	9015884	Isolator [2.4l Mit]	2
	3	384979	Clamp, Hose, Spring, 0.62d	4
	4	9008804	Plate, Mtg [Epr]	1
	5	9010273	Fitting, 1/2 X 5/8 Hose,Plastic[Mit]	2
	6	9010274	Clamp, Tension [Mit #29]	2
▽	7	9008193	Regulator	1
▲		9010626	Repair Kit, Vaporizer	1
	8	9015882	Bracket, Vaporizer [2.4l Mit]	1
	9	9015881	Hose, Fuel, Mold [2.4l Mit]	1
	10	9015885	Isolator [2.4l Mit]	1
	11	9015873	Hose, Coolant [2.4l Mit]	1
	12	9010279	Hose, Coolant, Molded [Mit 20/24m]	1
	13	385007	Screw, M6 X 10mm	1
	14	9010280	Bolt, M8–1.25 X 16 Fl Hd [Mit]	2
	15	9010264	Nut, M6–1.0 Flange [Mit]	1
▽	16	9006620	Lock–Off, 12v, Lpg [Mit]	1
▲	17	9007380	Filter Kit, Fuelock, Lpg	1
	18	9010317	Fitting, 1/4mpt X 1/4mpt, 90deg[Mit]	1
	19	9015912	Washer [2.4l Mit]	3

Fig. 25 – Electronic Pressure Regulator (EPR) Group, LPG Engine

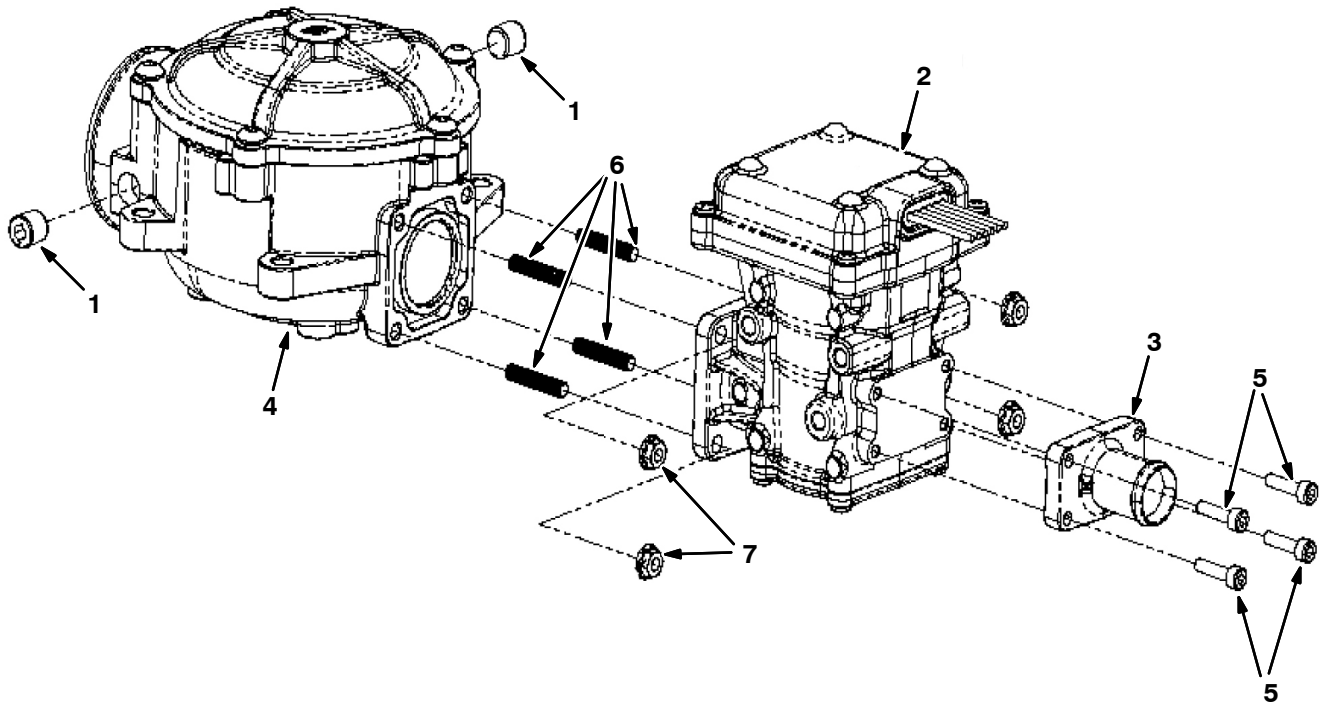

	Ref.	Part No.	Description	Qty.
	1	9010314	Plug, 1/8npt, Brs [Mit]	2
	2	9008806	Regulator, Press, Electronic [Epr]	1
	3	9008807	Fitting, Barb, 3/4" [Epr]	1
▽	4	9006618	Mixer , Lpg	1
▲		9010634	Repair Kit, Mixer	1
	5	9008808	Screw, Soc, M4 X 0.70 X 16	4
	6	9007424	Stud, M05–0.8	4
	7	9007423	Nut, Flng, M05–0.8	4