818R Parts Manual

BATTERY FLOOR SWEEPER

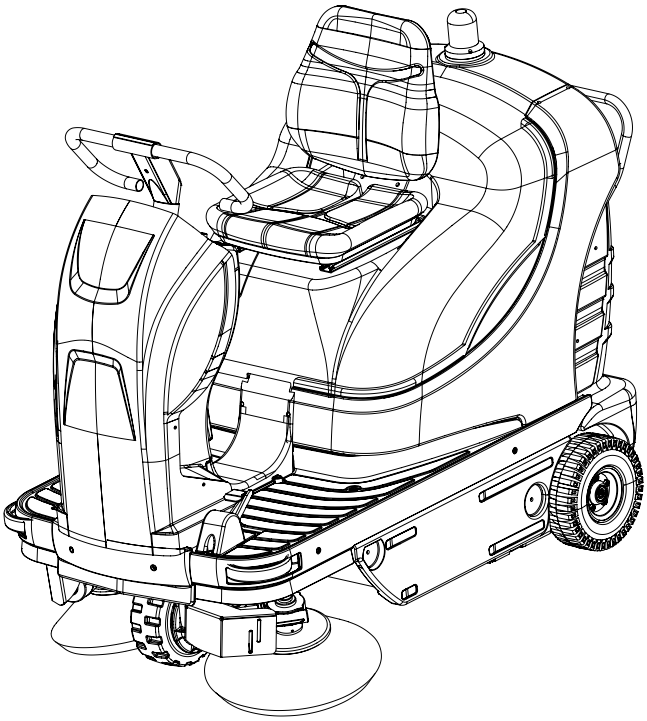

Model Part Number:
1248736 - SWEEPER [818R BATTERY EMEA]
1248737 - SWEEPER [818R BATTERY TCS]
1248738 - SWEEPER [818R BATTERY CHINA]

Contact:
EMEA
Europe@tennantco.com
www.tennantco.com
APAC
China 400-820-0885
www.tennantco.com.cn/VLX

Rev 03 (09-2020)

TRACTION WHEEL MOTOR

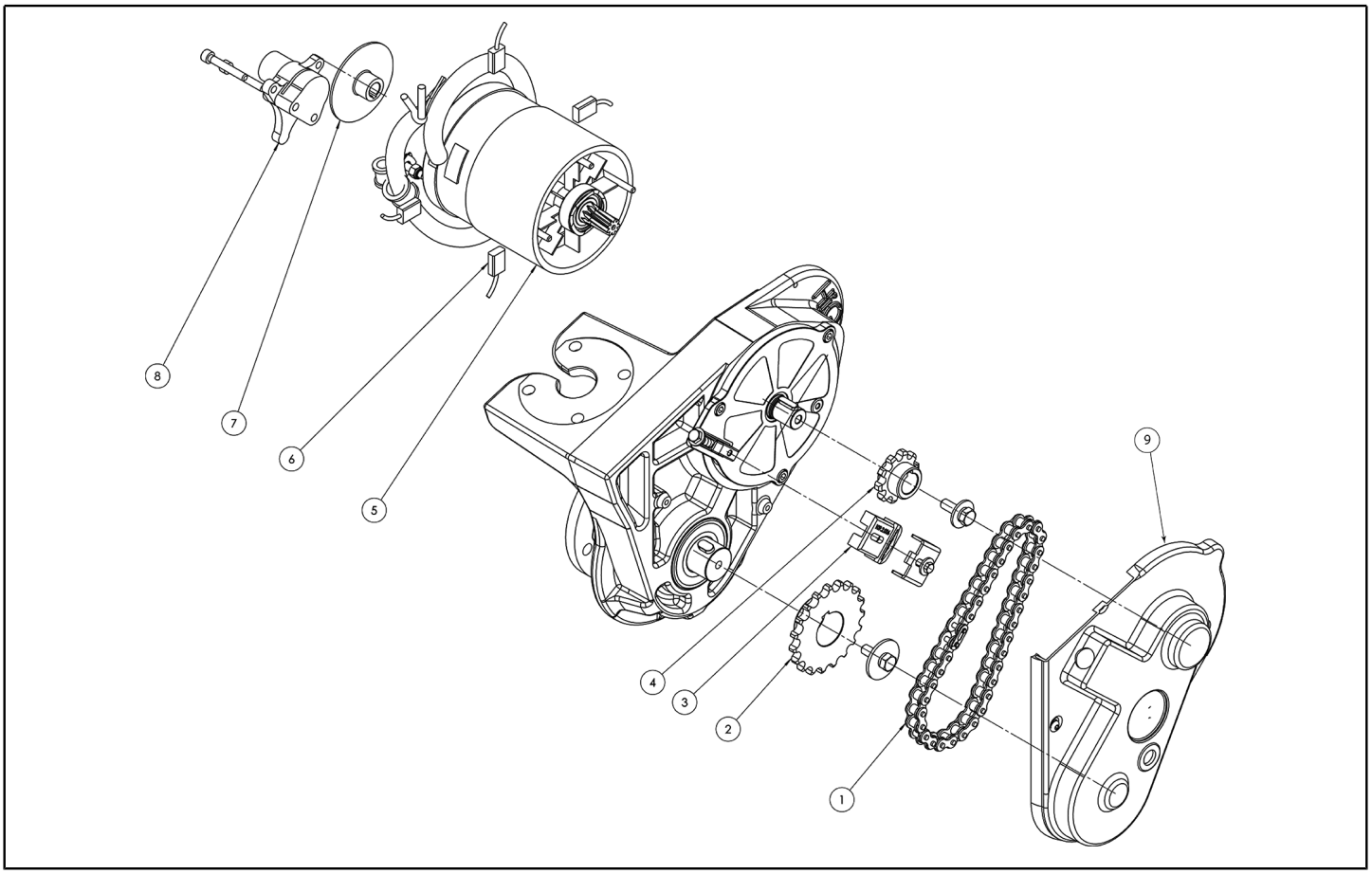

Ref.	Part No.	Description	Quantity
0001	MTCR00104	CHAIN -	1,00
0002	MTIG00130	PINION 1/2""x5/16"" Z19	1,00
0003	LAFN08226	CHAIN STRECHER -	1,00
0004	MTIG00129	PINION 1/2""x5/16"" Z10	1,00
0005	MOCC00461	Traction motor	1,00
0006	MEVR02378	Traction motor carbon brush (Qty 1, requires 4)	4,00
0007	LAFN08224	DISC -	1,00
0008	LAFN08225	DISC BRAKE CALIPER 1D.311	1,00
0009	MPVR11196	CRANKCASE MOTORWHEEL MOCC00434	1,00

FILTER GROUP

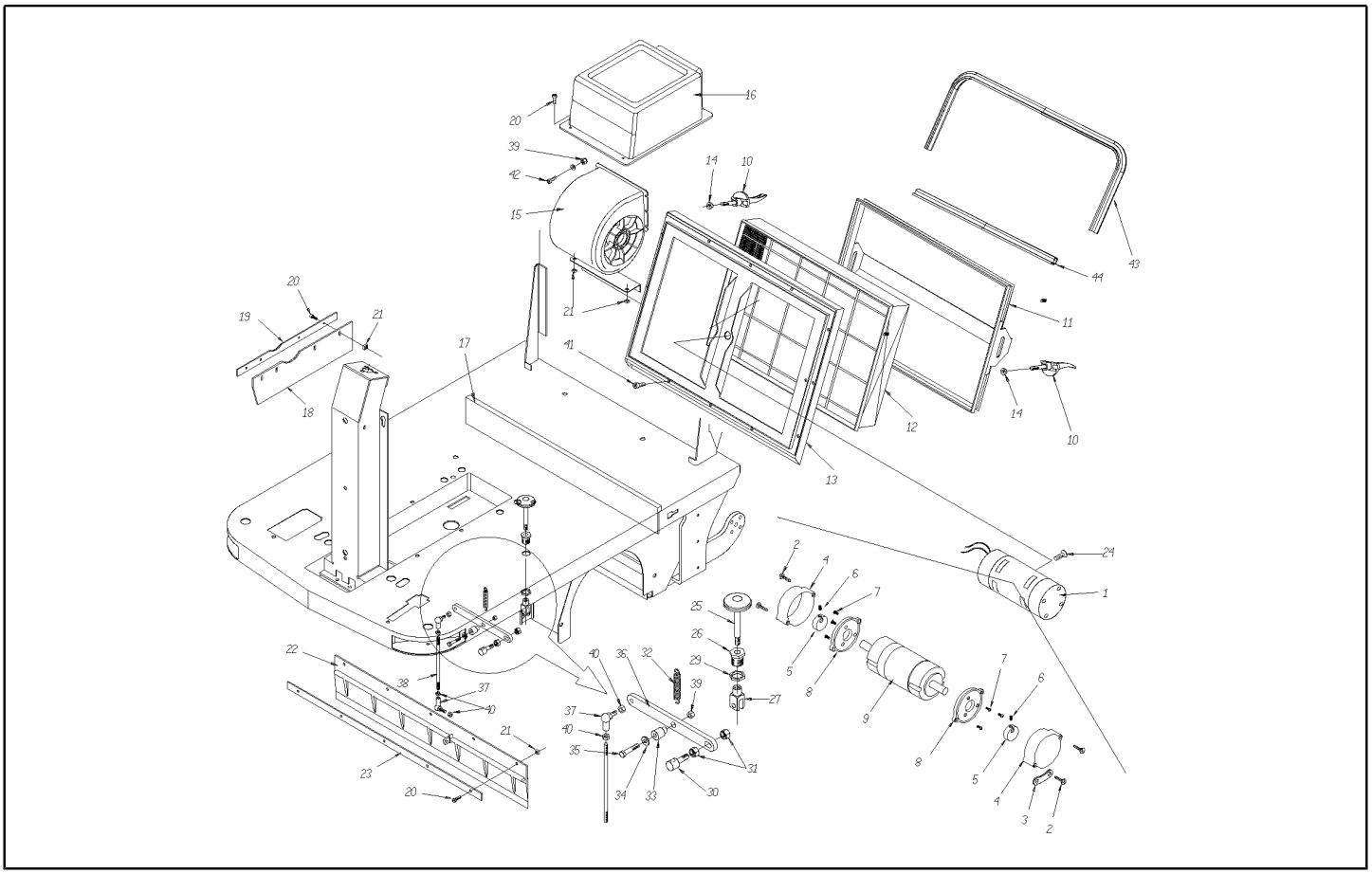

Ref.	Part No.	Description	Quantity
0001	MOCC45112	Filter shaker motor (Carbon Brush Part No. MEVR86071 - Qty 1, requires 2)	1,00
0002	VTVT47138	SCREW AUTOF.TSP UNI 6955 3,9X32	4,00
0003	MPVR00765	RUBBER SHACKLE WIRE FIXING	2,00
0004	LAFN47139	MASS PROTECTION FILTER COVER	2,00
0005	LAFN47140	BUSHING COUNTERWEIGHT FOR SHAKE FILTER	2,00
0006	VTVT75731	GRUB SCREW UNI 5923 6X5	2,00
0007	VTVT76616	SCREW TSCE UNI 5933 4X12 ZB	6,00
0008	MFVR47141	FLANGE X FILTER SHAKER MOTOR	2,00
0009	MOCC00004	MOTOR D.63 24V G3800 W35	1,00
0010	PMVR00383	SILVER FILTER LOCKING HANDLE	2,00
0011	LAFN11511	FRAME FILTER [818R]	1,00
0012	FTDP00015	FILTER, PANEL, PYES [818R]	1,00
0013	LAFN01030	FRAME FILTER SUPPORT COMPLETE	1,00
0014	VTDD13261	NUT UNI 5589 M8 BASSO ZB	2,00
0015	MOCC00008	Fan motor	1,00
0016	MPVR00864	SUCTION FAN COVER	1,00
0017	MPVR00760	FLAP, REAR, FIXED TK1050 (standard gray) or MPVR00849 Flap, Rear, Black (optional outdoor application)	1,00
0018	MPVR04709	FLAP, SIDE G1050 (standard gray) or MPVR04710 Flap, Side, Black (optional outdoor application)	1,00
0019	LAFN00325	CLAMP FLAP LATER.TK1050 ZINC.	1,00
0020	VTVT00044	SCREW TC AF.X PLAS UNI9707 4X16	13,00
0021	VTVR47015	PLASTIC INSERT (MEDREVITE)	13,00
0022	MPVR00847	FLAP, FRONT G1050 (standard gray) or MPVR00761 Flap, Front, Black (optional outdoor application)	1,00
0023	LAFN00326	CLAMP FLAP ANTER.TK1050 ZINC	1,00
0024	VTVT47143	SCREW TSCE UNI 5933 10X16 ZB	1,00
0025	LAFN01150	PEDAL LIFT FLAP G1050	1,00
0026	LAFN01159	PIN THREAD LIFT FLAP	1,00
0027	CMCV00001	FORK UNI 1676 M8X16	1,00
0029	VTDD00022	NUT UNI 5589 M18x1,5 zb	1,00
0030	VTVT00010	SCREW TE UNI 5739 8X40 ZB	1,00
0031	897598	NUT M 8 BASSO	1,00
0032	MLML00037	SPRING PEDAL LIFT FLAP	1,00
0033	LAFN01160	PIN PIVOT LIFT FLAP	1,00
0034	VTRS04026	WASHER D. 6X18X2.38	1,00
0035	VTVT63029	SCREW TCCE UNI 5931 6X35 ZB	1,00
0036	LAFN01163	ROD LIFT FLAP	1,00
0037	VTVR45280	TOGGLE-JOINT M 6	2,00
0038	LAFN06357	PIN LIFT FLAP G1050	1,00
0039	VTDD00491	NUT M 6 TEF	5,00
0040	VTDD00482	NUT M 6 ZIN UNI 5588	4,00
0041	VTVT09913	SCREW TCCE UNI 5931 6X16 ZB	12,00
0042	VTVT24209	SCREW TCCE UNI 5931 6X12 ZB	6,00
0043	GUGO00285	GASKET TK1320048	1,50
0044	GUGO00285	GASKET TK1320048	0,80

MAIN BRUSH GROUP

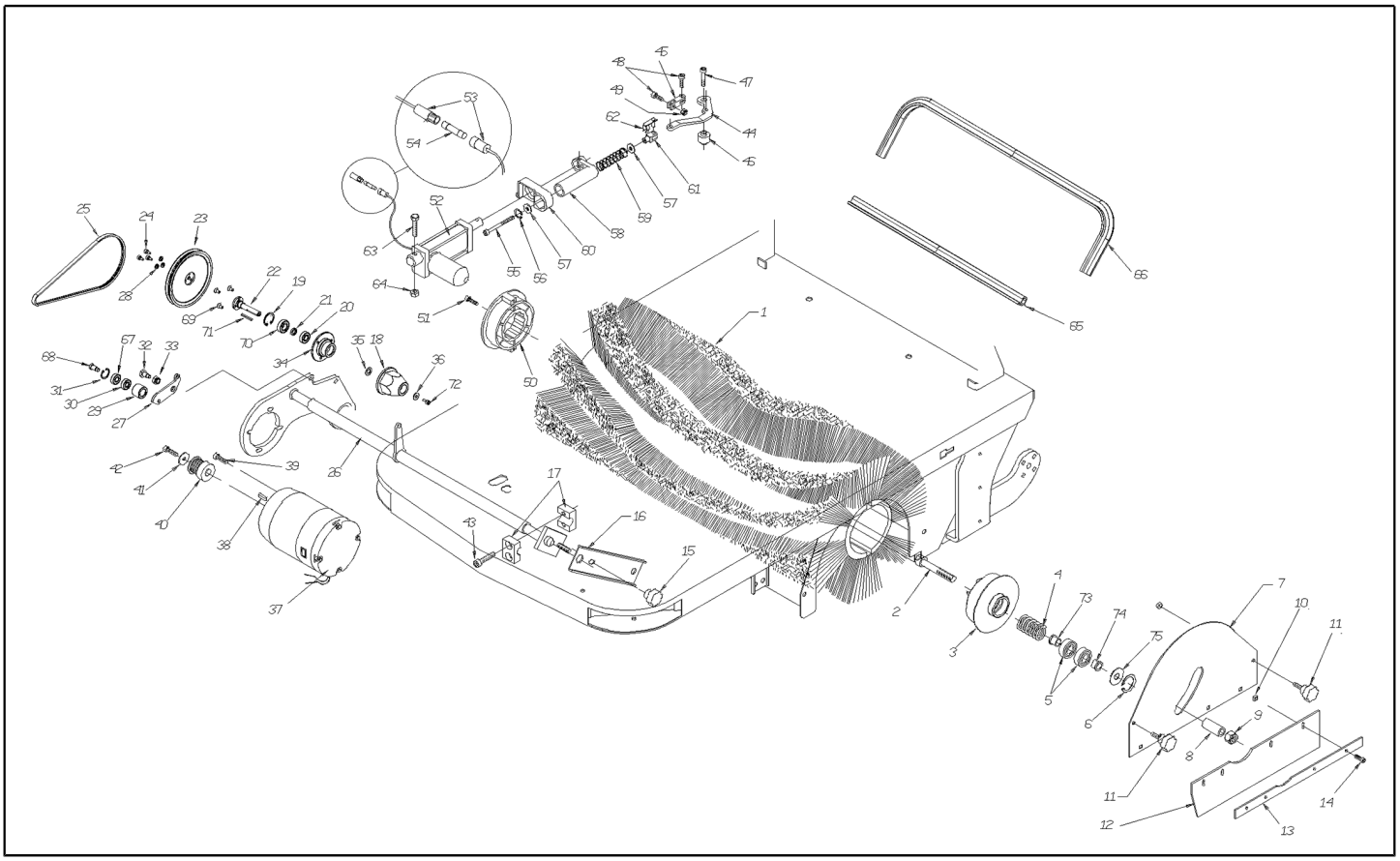

Ref.	Part No.	Description	Quantity
0001	SPPV00056	BRUSH, SWP, MAIN, PYP [818R] STANDARD	1,00
0001	SPPV01354	BRUSH, SWP, MAIN, PYP SOFT [818R] OPTION	1,00
0001	SPPV00064	BRUSH, SWP, MAIN, PYP/WIRE [818R] OPTION	1,00
0002	VTVT47048	SCREW TCEI M12X80 ZINC. UNI 5931	1,00
0003	MPVR04923	SUPPORT BRUSH CENTRAL	1,00
0004	MLML00295	SPRING CENTRAL BRUSH	1,00
0005	CUVR17004	Brush bearing	2,00
0006	VTAE17002	CIRCLIP D. 35 UNI 7437	1,00
0007	LAFN06356	PLANE CENTRAL BRUSH	1,00
0008	LAFN01169	SPACER S.C.	1,00
0009	VTDD00012	NUT AUTOBLOCK DIN 985 M12 ZB	1,00
0010	VTVR47015	PLASTIC INSERT (MEDREVITE)	4,00
0011	RTRT00022	HANDWHEEL D.30 M6X15	2,00
0012	MPVR04709	FLAP, SIDE G1050 (standard gray) or MPVR04710 Flap, Side, Black (optional outdoor application)	1,00
0013	LAFN00325	CLAMP FLAP LATER.TK1050 ZINC.	1,00
0014	VTVT00044	SCREW TC AF.X PLAS UNI9707 4X16	4,00
0015	VTVT00124	HANDWHEEL D.40 M8	1,00
0016	LAFN00816	CENTRAL REMOVABLE ARM BRUSH.ZINC.	1,00
0017	LAFN47055	HOSE COLLAR C3 D.18 SOLO PVC	4,00
0018	LAFN44774	HUB 1050	1,00
0019	VTAE00020	SEEGER I32 DIN472	1,00
0020	CUVR46942	Brush bearing	1,00
0021	LAFN11240	SPACER 12x18x4	1,00
0022	LAFN11239	PIN	1,00
0023	MTPL00023	PULLEY, CENTRAL BRUSH	1,00
0024	VTVT08937	SCREW TCCE UNI 5931 6X10 ZB	3,00
0025	MTCG00018	Belt POLY-V j8 (for brush)	1,00
0026	LAFN11238	ARM CENTRAL BRUSH	1,00
0027	LAFN11113	ARM	1,00
0028	VTRS01079	Washer	3,00
0029	LAFN11115	ROLLER	1,00
0030	CUVR86373	BEARING 6000 2RS	1,00
0031	VTAE13513	CIRCLIP D. 26 UNI 7437	1,00
0032	LAFN47051	PIN FIXING TENDICING.1400	1,00
0033	LAFN47033	BUSHING PEDAL PIN FIXING	1,00
0034	LAFN11241	BUSHING	1,00
0035	LAFN11242	WASHER	1,00
0036	VTRS04026	WASHER D. 6X18X2.38	1,00
0037	MOCC00297	Brush motor (Carbon Brush Part No. MEVR34441 - Qty 1, requires 4)	1,00
0038	VTVR13165	KEY UNI 6604 5X5X20	1,00
0039	VTVT06237	SCREW TCCE UNI 5931 6X20 ZB	4,00
0040	MTPL00022	PULLEY MOTOR CENTRAL BRUSH TK1050	1,00
0041	VTRS63242	WASHER UNI 6593 6X24X2 ZB	1,00
0042	VTVT75725	SCREW TBCE ISO 7380 6X10 ZB	1,00
0043	VTVT06236	SCREW TCCE UNI 5931 6X40 ZB	4,00
0044	LAFN00358	PULLEY, CENTRAL BRUSH RETURN	1,00

MAIN BRUSH GROUP - Continued

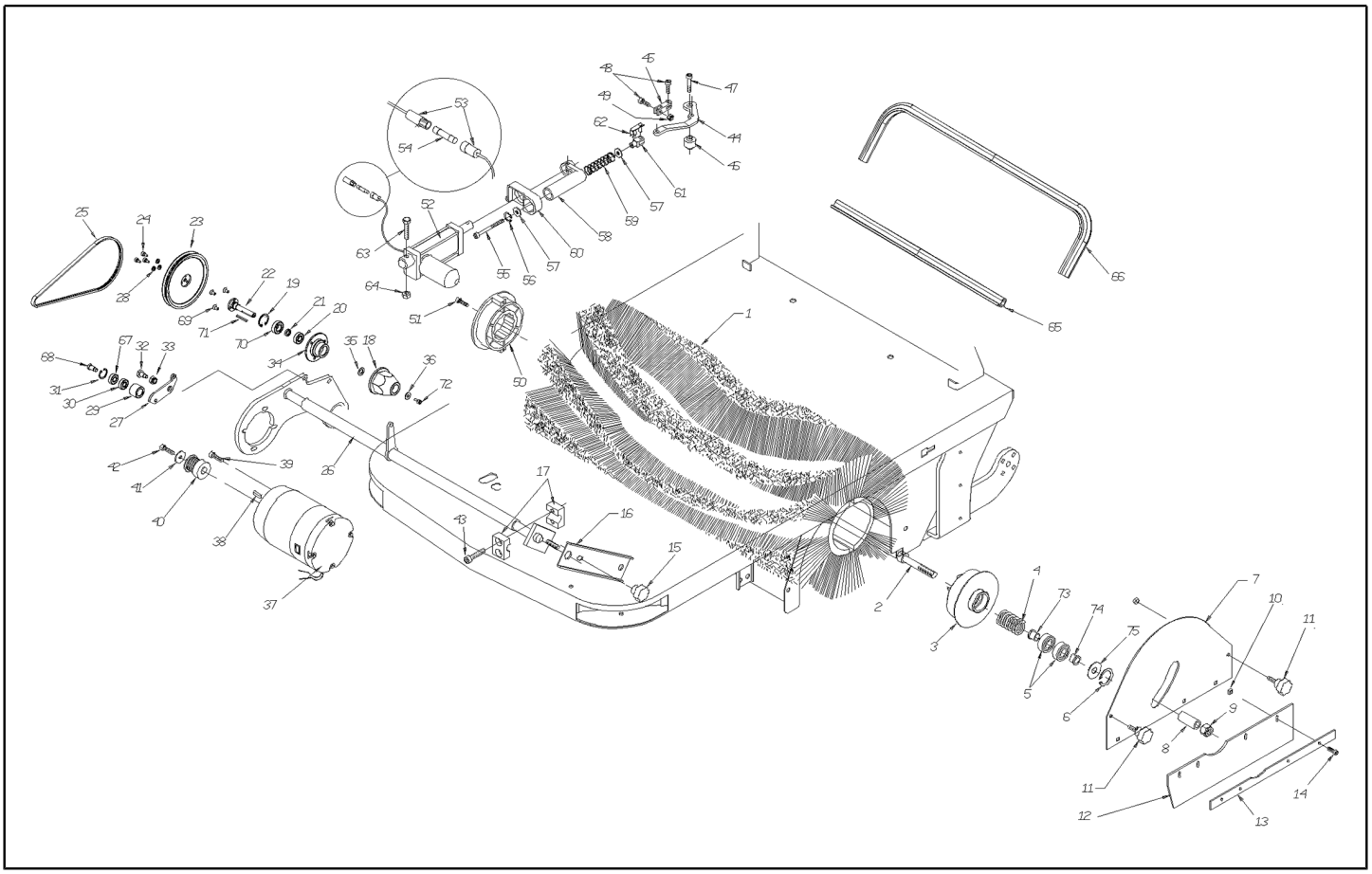

Ref.	Part No.	Description	Quantity
0045	LAFN00359	LINK-ROD TK 1050	1,00
0046	LAFN00533	PIN RETURN CENTRAL LEVER BRUSH	1,00
0047	VTVT63029	SCREW TCCE UNI 5931 6X35 ZB	1,00
0048	VTVT00104	SCREW TE UNI 5739 6X18 ZB	2,00
0049	VTDD00491	NUT M 6 TEF	2,00
0050	LAFN45099	DRIVE DISK CENTRAL BRUSH	1,00
0051	VTVT01705	SCREW 4X45 UNI 9709	2,00
0052	MOCC00494	ACTUATOR 1050	1,00
0053	MEVR00080	FUSE-HOLDER PV610 10A	1,00
0054	MEVR00079	FUSE 3.15A 250V 5X20	1,00
0055	VTVT37013	SCREW TE M 6X100 UNI 5737	1,00
0056	VTAE00009	SEEGER INTERNO DIN 472 D.20	1,00
0057	LAFN00124	CYLINDAR BAR, BUSHING	2,00
0058	MPVR45279	HOLDER, CENTRAL BRUSH SPRING 1400	1,00
0059	MLML45281	SPRING X ASTUCCIO CENTRAL BRUSH 1400	1,00
0060	LAFN00756	CENTRAL SPRING BOX GUIDE TK1400	1,00
0061	CMCV00006	FORK UNI 1676 M6X24	1,00
0062	CMCV00009	CLIP UNI 1676	1,00
0063	VTVT00017	SCREW TE UNI 5739 8X35 ZB	1,00
0064	897598	NUT M 8 BASSO	1,00
0065	GUVR00010	GASKET	0,70
0066	GUVR00010	GASKET	1,10
0067	CUVR86373	BEARING 6000 2RS	1,00
0068	LAFN11114	PIN	1,00
0069	VTVT00678	SCREW	3,00
0070	CUVR00164	BEARING 6002RS -SKF-	1,00
0071	VTVR00006	KEY UNI 6604 4X4X35	1,00
0072	VTVT24209	SCREW TCCE UNI 5931 6X12 ZB	1,00
0073	LAFN06782	BUSHING FOR BEARING	1,00
0074	LAFN06783	BUSHING FOR BEARING 1	1,00
0075	VTRS00553	WASHER DUST CAP	1,00

TRACTION WHEEL GROUP

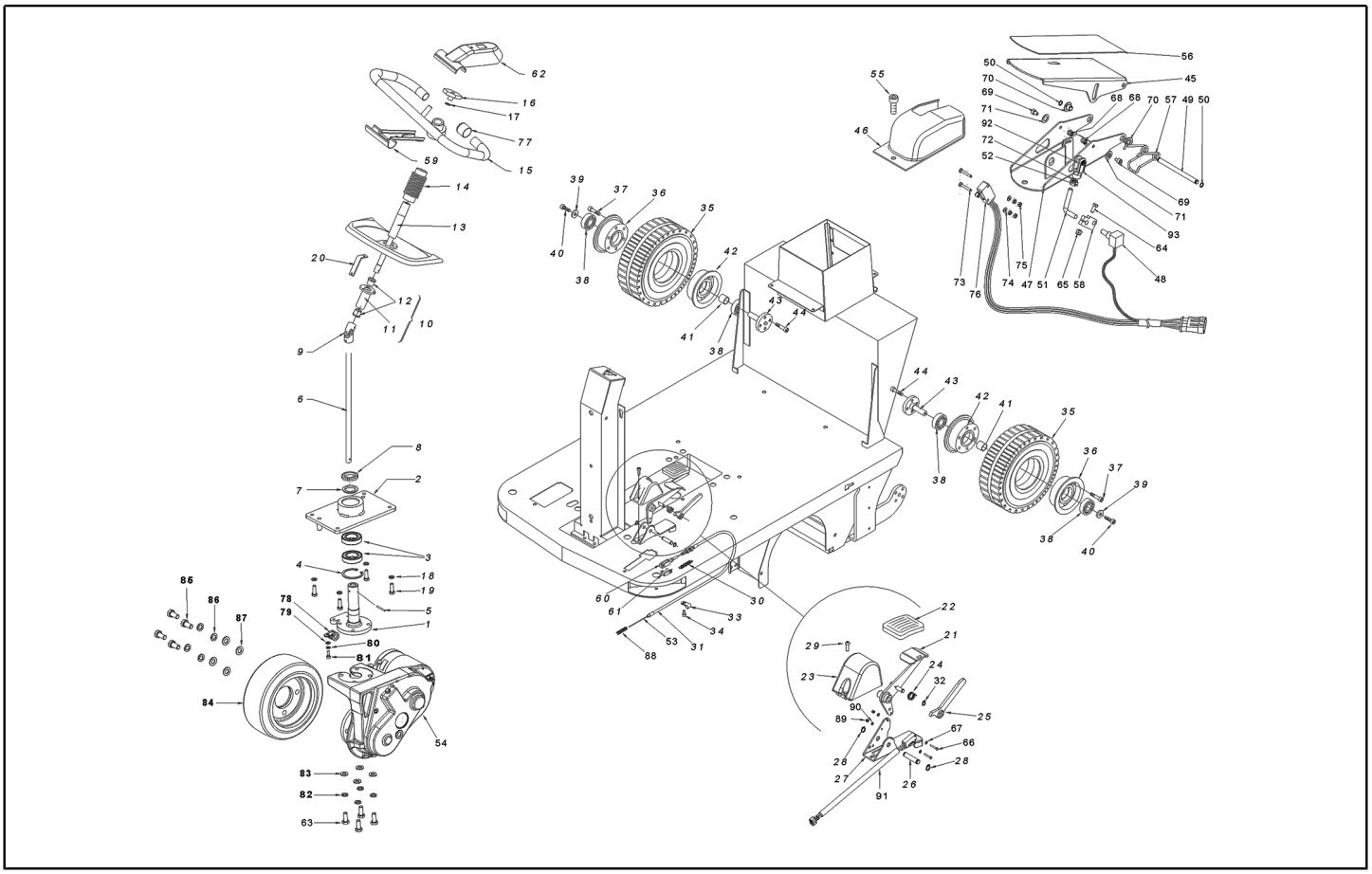

Ref.	Part No.	Description	Quantity
0001	LAFN09414	SPACER -	1,00
0002	LAFN09415	SPACER -	1,00
0003	CUVR00025	BEARING 6006 2RS 30X55X13	2,00
0004	VTAE00015	SEEGER INTERNAL DIN 472 D.55	1,00
0005	VTVR46987	ELASTIC PLUG DIN 1481 5X25	1,00
0006	ALTR00039	SHAFT STEERING WHEEL G1050	1,00
0007	LAFN01173	SPACER STEERINGWHEEL	1,00
0008	VTVT00114	RING NUT AUTOBLOK M30X1,5 GUK	1,00
0009	897397	JOINT, STEERING	1,00
0010	PMTR00077	BUSHING FLYWAY DOOR	1,00
0011	LAFN00149	BUSHING PORTA PIANTONE TK1050 ZIN	1,00
0012	897398	BUSHING, 15B 24D 17.5	2,00
0013	ALTR00031	SHAFT PER VOLANTE TK 1050 ZINC.	1,00
0014	MPVR47066	PROTECTOR X ALBERO SPAZZOLA TK1000	1,00
0015	SESD00022	STEERING WHEEL G1050 USA COMPLETO	1,00
0016	VTVT00456	SCREW TE UNI 5739 10X25 ZB	1,00
0017	VTRS00514	WASHER UNI 6593 10X30X2,5 ZB	1,00
0018	VTRS01080	WASHER D. 8 GRW	4,00
0019	VTVT00447	SCREW TE 8X25 UNI5739	4,00
0020	LAFN01184	FIXED DASHBOARD BRACKET	1,00
0021	LAFN11138	PEDAL	1,00
0022	MPVR45096	PEDAL COVER LARGE V1021	1,00
0023	MPVR11518	COVERING -	1,00
0024	MLML00035	SPRING RECALL PEDAL B.F.G1050	1,00
0025	LAFN01147	PEDAL BLOCK G1050	1,00
0026	LAFN11140	PIN	1,00
0027	LAFN11139	SUPPORT	1,00
0028	VTAE87276	SEEGER EXT. D10 DIN471	2,00
0029	VTVT09916	SCREW TBCE ISO 7380 6X20 ZB	1,00
0030	MLML45109	SPRING LIFT FLAP TK1400	1,00
0031	CMCV00473	SHEATH	1,00
0032	VTAE14096	SEEGER EXTERNAL DIN 471 D.8	1,00
0033	FSVR00005	CLAMP TIPO "ECO"FORO MM8 D.1 W0	1,00
0034	VTVT75719	SCREW TE FR 6X10 ZB KNURLED	1,00
0035	RTRT00035	RING, RUBBER, GRAY WHEEL, NON-MARKING	2,00
0036	LAFN85290	WHEEL HUB 124x57,5	2,00
0037	VTVT00066	SCREW TCCE UNI 5931 8X25 ZB	12,00
0038	CUVR00005	Wheel bearing 6202	4,00
0039	VTRS63242	WASHER UNI 6593 6X24X2 ZB	2,00
0040	VTVT75726	SCREW TBCE ISO 7380 6X16 ZB	2,00
0041	LAFN00275	SPACER INTERNAL WHEEL POST.TK1300	2,00
0042	LAFN85380	WHEEL HUB POST.D124 H.33.5	2,00
0043	LAFN00530	WIDE REAR WHEEL AXEL TK1050	2,00
0044	VTVT45340	SCREW TSCE UNI 5933 8X16 ZB	8,00

TRACTION WHEEL GROUP - Continued

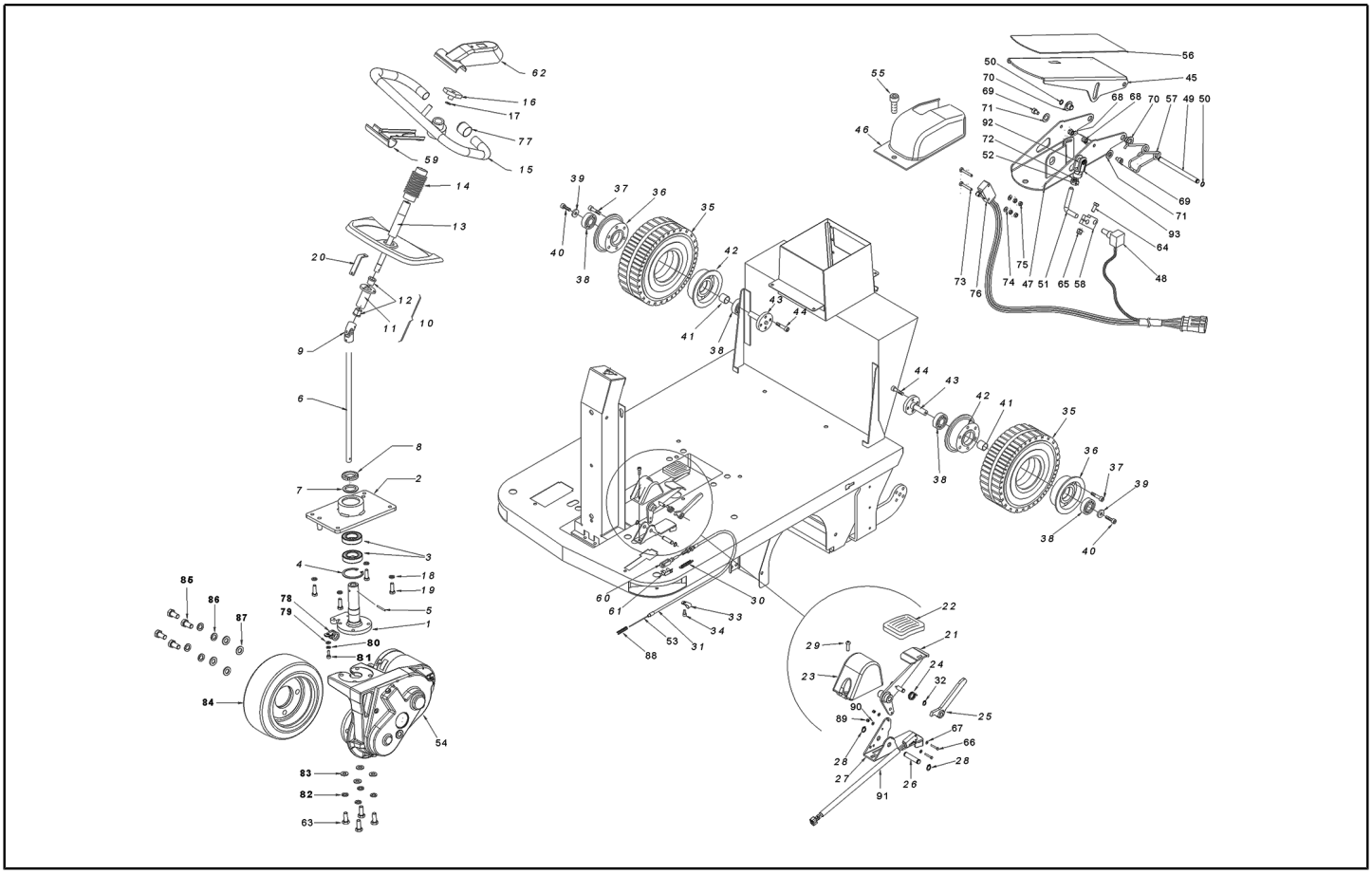

Ref.	Part No.	Description	Quantity
0045	LAFN06474	SHEET METAL PA. PEDALE	1,00
0046	MPVR00302	CRANKCASE FEEDER PEDAL	1,00
0047	LAFN07532	BASE -	1,00
0048	MECB01227	Traction potentiometer	1,00
0049	LAFN00524	PIN PEDAL TK 1050	1,00
0050	VTAE48552	CIRCLIP EXTERNAL DIN 471 D.6	2,00
0051	LAFN00909	BRACKET PEDAL WIRE	1,00
0052	VTDD00482	NUT M 6 ZIN UNI 5588	1,00
0053	CMCV00472	CABLE	1,00
0054	MOCC00452	MOTOR MOTORWHEEL G1050 NEW (Carbon Brush kit - Part No. MEVR02378 - Qty 4)	1,00
0055	VTVT62920	SCREW TE FR 6X16 ZB KNURLED	1,00
0056	MPVR00866	PLANE SLIP G1050	1,00
0057	MLML00034	Pedal spring	1,00
0058	LAFN01149	CONNECTING ROD PEDALE STEP G1050	1,00
0059	MPVR04653	LOWER STEERING WHEEL COVER	1,00
0060	CMCV00006	FORK UNI 1676 M6X24	1,00
0061	CMCV00009	CLIP UNI 1676	1,00
0062	MPVR04652	UPPER STEERING WHEEL COVER	1,00
0063	VTVT00456	SCREW TE UNI 5739 10X25 ZB	4,00
0064	VTVT00727	SCREW TE M. 4-20	1,00
0065	897582	NUT M 4 TEF UNI 7473	1,00
0066	VTVT01350	SCREW M3-20 INOX	2,00
0067	897193	WASHER, D. 3, INOX	1,00
0068	897582	NUT M 4 TEF UNI 7473	2,00
0069	VTVT00089	SCREW TCCE UNI 5931 4X10 ZB	2,00
0070	CUVR00183	BUSHING -	2,00
0071	MPVR05528	WASHER -	2,00
0072	VTRS01079	Washer	1,00
0073	VTVT01350	SCREW M3-20 INOX	2,00
0074	VTRS01579	WASHER D. 3 UNI 6592	2,00
0075	897189	NUT, M3, INOX	4,00
0076	MECB01228	Traction microswitch	1,00
0077	MPVR05256	CAP GPN-280 ER32	2,00
0078	897364	CLAMP, STL, 16D, INSULATED	1,00
0079	VTRS00503	WASHER D. 6 UNI 6798	1,00
0080	VTRS01079	Washer	1,00
0081	VTVT09913	SCREW TCCE UNI 5931 6X16 ZB	1,00
0082	VTRS00107	WASHER M10 Grower	4,00
0083	VTRS00505	WASHER D.10 UNI 6592	4,00
0084	RTRT00581	WHEEL -	1,00
0085	VTVT00026	SCREW TE UNI 5739 12X25 ZB	4,00
0086	897544	WASHER, D.12, GROVER, UNI1751, INOX	4,00
0087	897215	WASHER, D.12X24, UNI6592, INOX	4,00
0088	MLML00033	SPRING LIFT FLAP SILVER ZB	1,00

TRACTION WHEEL GROUP - Continued

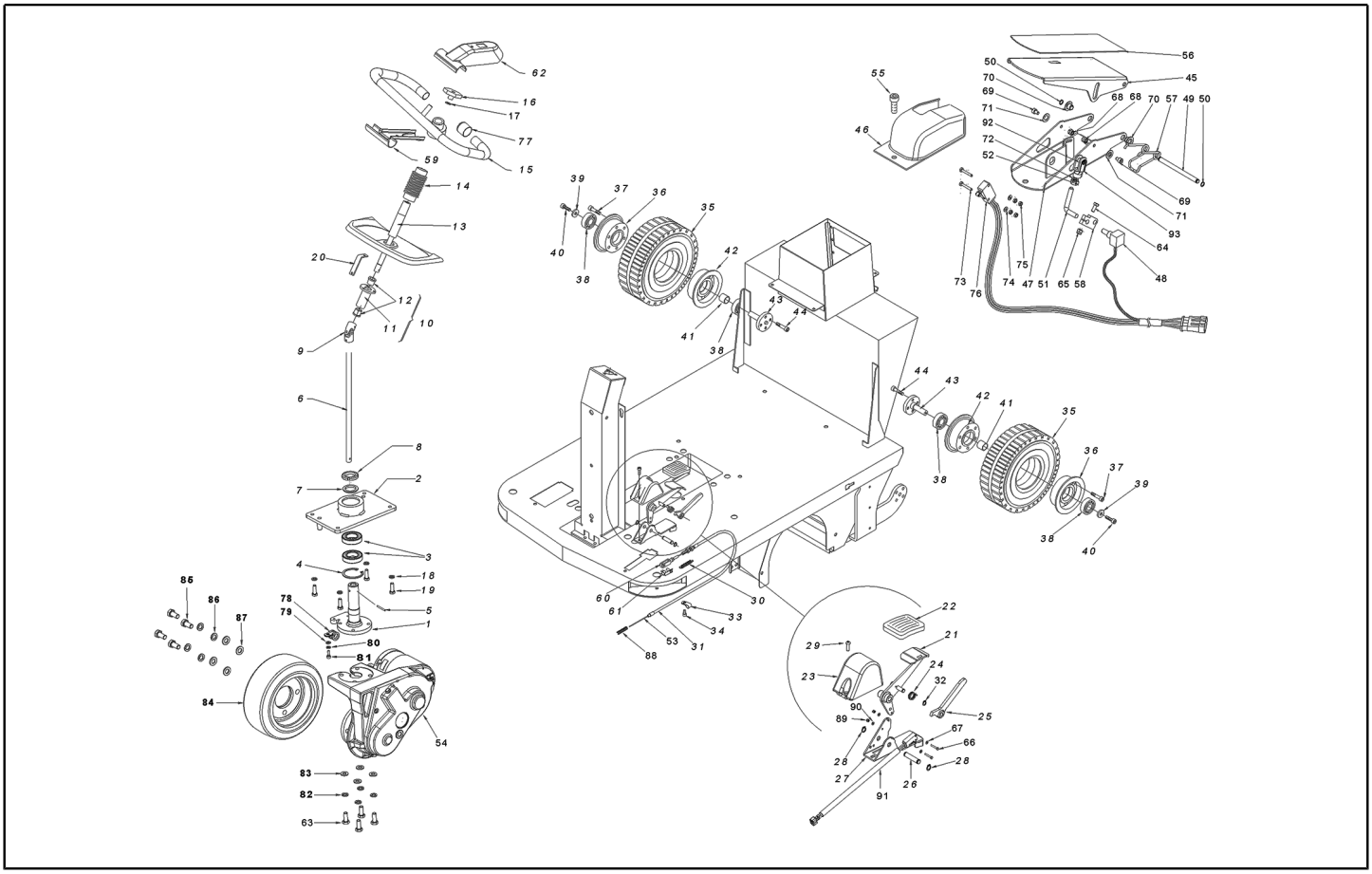

Ref.	Part No.	Description	Quantity
0089	9018496	NUT, STRAP, SQGE	2,00
0090	897193	WASHER, D. 3, INOX	2,00
0091	MECI00637	MICROSWITCH -	1,00
0092	CMCV76639	FORK M 6 UNI 1676	1,00
0093	CMCV75717	CLIP UNI 1676 M6	1,00

BODY & FRAME GROUP

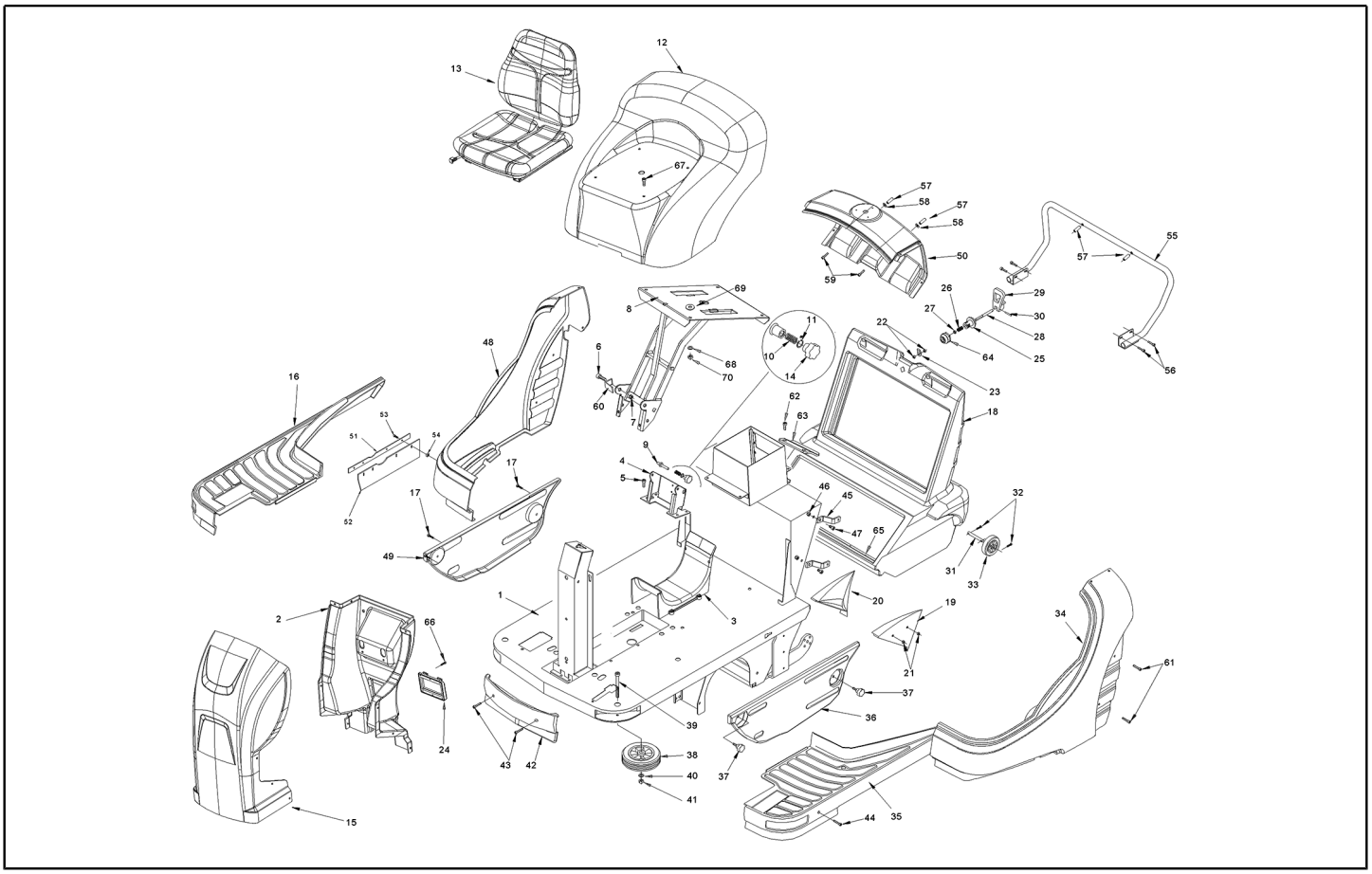

Ref.	Part No.	Description	Quantity
0001	LAFN11477	FRAME 1050 PAINTED	1,00
0002	MPVR12398	COVER, FRONT, INTERNAL, GREY 818R	1,00
0003	MPVR00330	G1050 CABLE HOLDER central tunnel	1,00
0004	LAFN06731	Upper column seat LION 10500 DP compl.	1,00
0005	VTVT29810	SCREW TCCE UNI 5931 8X20 ZB	4,00
0006	VTVT00456	SCREW TE UNI 5739 10X25 ZB	2,00
0007	VTDD00042	NUT AUT.M10 UNI7474	2,00
0008	LAFN11467	SUPPORT .	1,00
0009	LAFN00526	PIN BLOCK SEAT DOOR TK1050	1,00
0010	MLML00028	SPRING PIN BLOCK SEAT DOOR	1,00
0011	VTAE00016	SEEGER INTERNAL DIN 472 D.13	1,00
0012	MPVR12523	HOOD 818R	1,00
0013	SESD45982	SEAT SC 73 L.14 SENSOR REED	1,00
0014	VTVT00127	HANDWHEEL D.30 M6	1,00
0015	MPVR12402	COVER, FRONT, EXTERNAL, PURPLE P.275 C	1,00
0016	MPVR00853	PLANE DX G1050	1,00
0017	VTVT09916	SCREW TBCE ISO 7380 6X20 ZB	2,00
0018	MPVR08008	DRAWER WASTE TK1050	1,00
0019	PMVR00501	CONVEYOR DRAWER SX	1,00
0020	PMVR00502	CONVEYOR DRAWER DX	1,00
0021	VTDD00010	NUT AUTOBLOK DIN 985 M6 BASSO	4,00
0022	VTDD13261	NUT UNI 5589 M8 BASSO ZB	2,00
0023	LAFN01177	BRACKET HOLDER DRAWER	1,00
0024	MEVR00232	FUSE, INSPECTION BOX	1,00
0025	LAFN00338	RING NUT DRAWER HOOK TK1050	1,00
0026	MLML00036	SPRING CLIP DRAWER	1,00
0027	LAFN75909	SPACER D.12 H.3,5	1,00
0028	LAFN00525	PULL PIN TK1050	1,00
0029	MPVR00865	HANDLE TRASH DRAWER	1,00
0030	VTVR00055	PLUG D.4 H.32	1,00
0031	LAFN00532	WHEEL PIN DRAWER	2,00
0032	VTVT00339	SCREW TCEI M5x20	4,00
0033	RTRT00016	WHEEL LOOSE 80/30/G NERE	2,00
0034	MPVR12400	COVER, BODY, LEFT GREY 818R	1,00
0035	MPVR00854	PLANE SX G1050	1,00
0036	MPVR00856	PLANE SX G1050	1,00
0037	VTVT00125	HANDWHEEL D.40 M6X15	2,00
0038	RTRT00038	WHEEL D.150X32	2,00
0039	VTVT01575	SCREW TCCE UNI 5931 10X60 ZB	2,00
0040	VTRS00012	WASHER UNI 6592 10X21 ZB	2,00
0041	VTDD00011	NUT AUTOBLOK DIN 985 M10	2,00
0042	MPVR00331	Bumper ant.G1050 COMPLETE HOLDER	1,00
0043	VTVT00034	SCREW TBCE ISO 7380 6X35 ZB	2,00
0044	VTVT09916	SCREW TBCE ISO 7380 6X20 ZB	4,00

BODY & FRAME GROUP - Continued

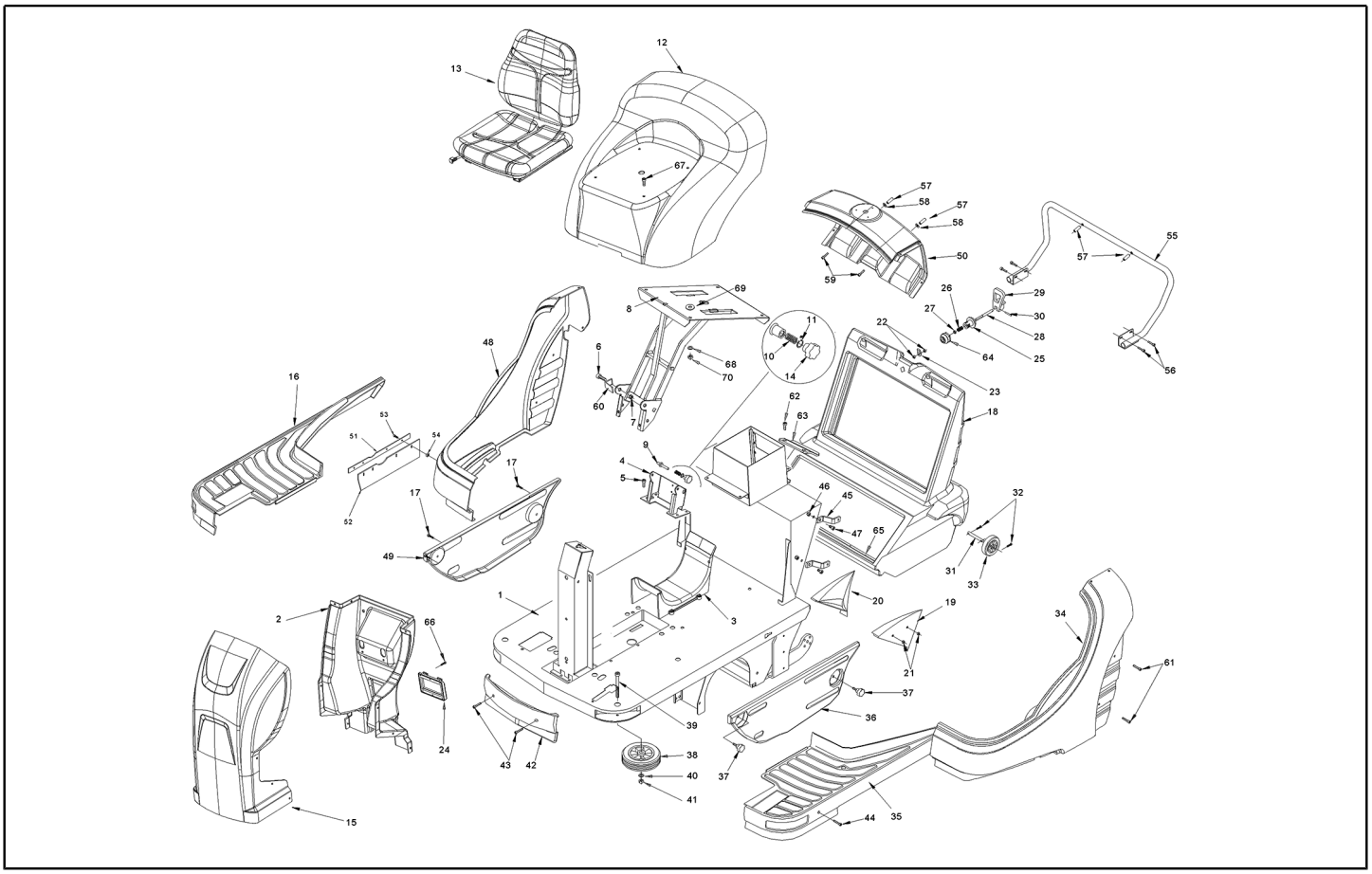

Ref.	Part No.	Description	Quantity
0045	LAFN06271	LION 10500 crankcase fixing bracket	4,00
0046	VTDD00010	NUT AUTOBLOK DIN 985 M6 BASSO	4,00
0047	VTVT75726	SCREW TBCE ISO 7380 6X16 ZB	4,00
0048	MPVR12401	COVER, BODY, RIGHT, GREY 818R	1,00
0049	MPVR00855	PLANE DX G1050	1,00
0050	MPVR12403	COVER, REAR, GREY 818R	1,00
0051	LAFN10992	SHEET METAL PA. FISSA FLAP	1,00
0052	MPVR04709	FLAP, SIDE G1050	1,00
0053	897476	SCREW, M5X16, TBCE, ISO7380, ZB	4,00
0054	VTDD78364	NUT M5 SELF-LOCKING	4,00
0055	LAFN10991	REAR BUMBER	1,00
0056	VTVT00527	SCREW TE FR 6X10 ZB ZIG.	4,00
0057	LAFN10994	SPACER FIXED BUMPER	2,00
0058	897619	WASHER D. 8 X24 ZC.	2,00
0059	VTVT28567	SCREW TCEI 8X50 UNI5931	2,00
0060	LAFN01188	FIXED FAIRING BRACKET	2,00
0061	VTVT75725	SCREW TBCE ISO 7380 6X10 ZB	4,00
0062	VTVT08937	SCREW TCCE UNI 5931 6X10 ZB	2,00
0063	LAFN07037	BRACKET, CENTERING, DRAWER	1,00
0064	LAFN07036	DRAWER CENTERING CONE	1,00
0065	LAFN06694	SHEET METAL PA. DRAWER REINFORCEMENT	1,00
0066	VTVT48694	SCREW, TCB, TC, M5X12, UNI9707, TZ	4,00
0067	VTVT00446	SCREW TE UNI 5739 8X20 ACC.8.8	4,00
0068	VTRS00504	WASHER D. 8 ZC. UNI 6592	4,00
0069	897619	WASHER D. 8 X24 ZC.	4,00
0070	897598	NUT M 8 BASSO	4,00

SIDE BRUSH GROUP

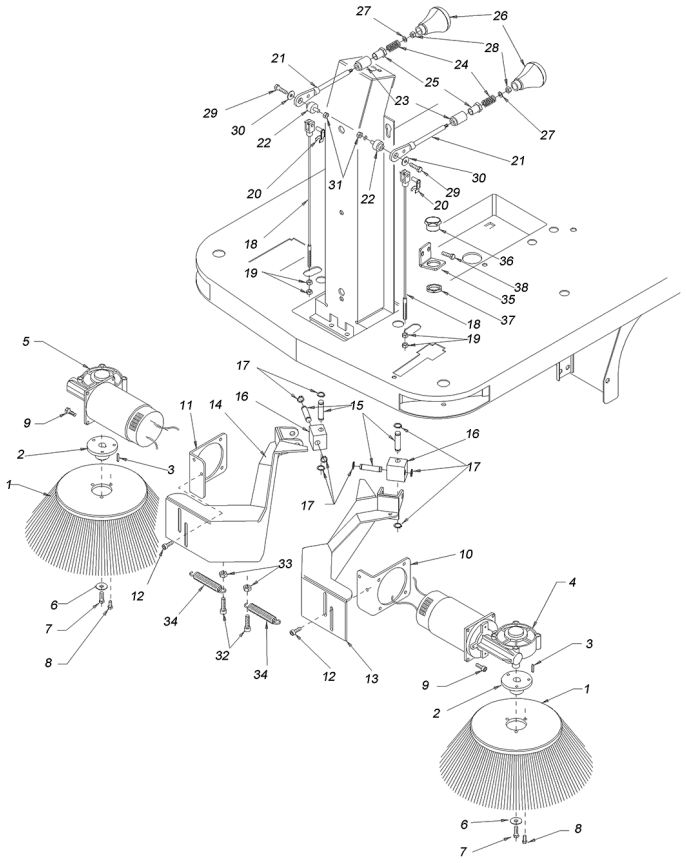

Ref.	Part No.	Description	Quantity
0001	SPPV75790	BRUSH, SWP, SIDE, PYP [818R] STANDARD	2,00
0001	SPPV75794	BRUSH, SWP, SIDE, PYP/WIRE [818R] OPTION	2,00
0002	LAFN45010	FLANGE FISS.SPAZZ.LAT.TK1000	2,00
0003	VTVR13165	KEY UNI 6604 5X5X20	2,00
0004	MOCC00031	Side brush motor SX	1,00
	MEVR31145	Side brush motor carbon brush (Qty 1, requires 2)	2,00
0005	MOCC00032	Side brush motor DX	1,00
	MEVR31145	Side brush motor carbon brush (Qty 1, requires 2)	2,00
0006	VTRS63242	WASHER UNI 6593 6X24X2 ZB	2,00
0007	VTVT75719	SCREW TE FR 6X10 ZB KNURLED	2,00
0008	VTVT62920	SCREW TE FR 6X16 ZB KNURLED	6,00
0009	VTVT09913	SCREW TCCE UNI 5931 6X16 ZB	8,00
0010	LAFN00809	PLATE PORTABRUSH.LAT.SX TK1050	1,00
0011	LAFN00808	PLATE PORTABRUSH.LAT.DX TK1050	1,00
0012	VTVT75719	SCREW TE FR 6X10 ZB KNURLED	4,00
0013	LAFN09470	SUPPORT -	1,00
0014	LAFN00798	SIDE SUPPORT DX 1050 GALVANIZED	1,00
0015	LAFN01148	SIDE PIN BRUSH	4,00
0016	LAFN00154	BLOCK ARM SIDE BRUSH TK1050	2,00
0017	VTAE87276	SEEGER EXT. D10 DIN471	8,00
0018	CMCV00386	CABLE SIDE BRUSH	2,00
0019	VTDD00004	NUT M 6 ZC UNI5588	4,00
0020	CMCV00009	CLIP UNI 1676	2,00
0021	LAFN00803	ARM BRUSH LIFT LATER.1050	2,00
0022	LAFN00153	BUSHING LEVER LIFT BRUSH.LAT.ZINC.	2,00
0023	MPVR00081	BUSHING MANOVRA TK1050	2,00
0024	MLML00027	SPRING BRUSH CENTRAL KNOB	2,00
0025	LAFN00523	SPRING HOLDER BRUSH LIFT	2,00
0026	MPVR00886	SMALL KNOB SIDE BRUSH G1050	2,00
0027	VTRS00010	WASHER UNI 6592 5X10 ZB	2,00
0028	VTDD00017	NUT AUTOBLOK DIN 985 M5	2,00
0029	VTVT12255	SCREW TCCE UNI 5931 6X25 ZB	2,00
0030	VTRS86634	WASHER UNI 6593 6X18X1,5 ZB	2,00
0031	VTDD19688	NUT M6 UNI 7473	2,00
0032	VTVT00016	SCREW TE UNI 5739 8X30 ZB	2,00
0033	VTDD87083	NUT AUTOBLOK DIN 985 M8 BASSO	2,00
0034	MLML45102	SPRING ARM SIDE BRUSH TK1400	2,00
0035	LAFN11473	BRACKET .	2,00
0036	LAFN33802	BUSHING CH.24 L.16 G 1/2 L9	2,00
0037	RCDS21223	RING NUT 1/2" X 5 NIK	2,00
0038	VTVT62920	SCREW TE FR 6X16 ZB KNURLED	4,00

ELECTRICAL COMPONENTS GROUP

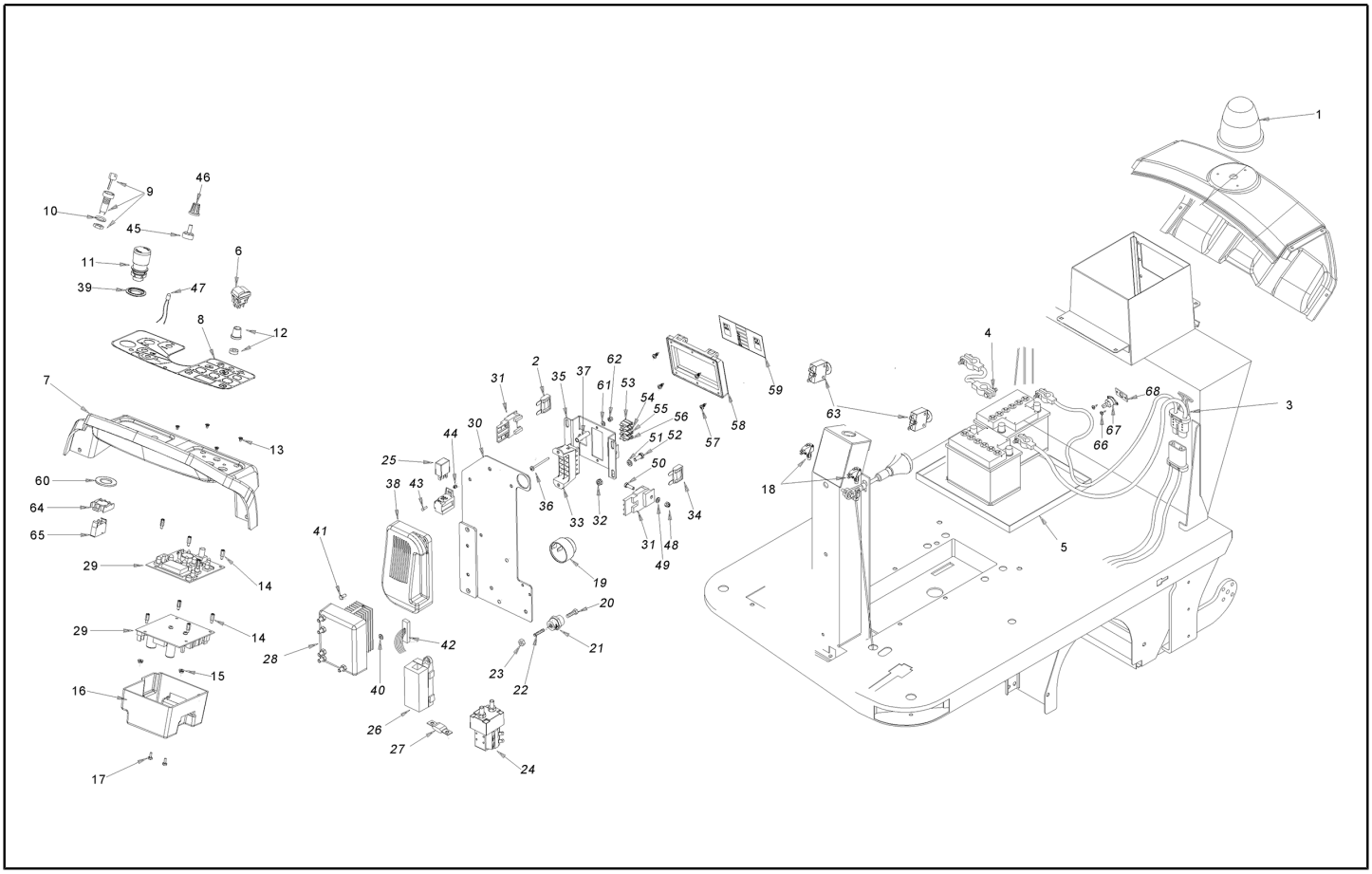

Ref.	Part No.	Description	Quantity
0001	MEVR00935	FLASHING LIGHT G1050	1,00
0002	MEVR00644	FUSE, 030A	1,00
0003	MECB00126	CABLE COLLEG.BATTERY G1050, EMEA	1,00
0004	897205	WIRING BATTERY BRIDGE W/TERMINAL, EMEA	3,00
0003	1242408	CABLE, BATTERY, CHARGER CONNECTOR, CN	1,00
0004	1073680	CABLE, BATTERY, 15.0L BLK [M8 RING/M8 RING] CN	3,00
0005	LAFN46836	CONTAINER BATTERY TK1400	1,00
0006	MECI00038	SWITCH BIPOLARE	1,00
0007	MPVR12516	INSTR.PANEL 818R	1,00
0008	MEVR01984	DASHBOARD CONTROL PANEL G1050	1,00
0009	MECI75805	SWITCH KEY FOR BATTERY MACHINES	1,00
0010	VTRS00023	WASHER THREADED INT.UNI 6798 D.18	1,00
0011	MECI00582	BUTTON -	1,00
0012	MECE00498	Display card	1,00
0013	VTVT01711	SCREW M4x6 UNI7688	4,00
0014	LAFN11146	COLUMN	4,00
0015	VTDD00528	NUT M4 INOX DIN 6923	4,00
0016	MPVR04902	MICRO CARD COVER	1,00
0017	VTVT00288	SCREW TCTC 4X10	2,00
0018	MECI75801	Side brush switch	2,00
0019	MEVR01436	BUZZER -	1,00
0020	VTVT75719	SCREW TE FR 6X10 ZB KNURLED	2,00
0021	MEVR47082	INSULATOR MM35 M6 CH 32	2,00
0022	VTVT47088	GRUB SCREW UNI 5923 6X30 GREZZO	2,00
0023	VTDD00004	NUT M 6 ZC UNI5588	2,00
0024	MECI00532	Front main contactor	1,00
0025	897297	RELAY 24V 10/20A	1,00
0026	MEVR00146	FUSE-HOLDER MEGA	1,00
0027	MEVR00145	MEGA fuse 100 Amp	1,00
0028	MECE00860	BOARD, CONTROL [818R] (Replaces MECE00495)	1,00
0029	MECE00498	Display card	1,00
0030	LAFN11472	SUPPORT, ELECTRONIC BOARD	1,00
0031	MEVR00613	FUSE CARRIER MAXIVAL with cover	2,00
0032	VTDD00128	SELF-LOCJ.NUT M5	2,00
0033	MEVR01387	BOX FUSE	1,00
0034	MEVR00618	FUSE 60A	1,00
0035	LAFN11444	BRACKET 1050	1,00
0036	VTVT17336	SCREW 4X45 TCB UNI7687	2,00
0037	LAFN06735	SPACER 6-8 H31.5	2,00
0038	MECE00497	Curtis Traction card	1,00
0039	MPVR11692	ADAPTER BUTTON	1,00
0040	VTRS00365	THICKNESS 18X25X1	2,00
0041	VTVT01127	SCREW TE M6x20	2,00
0042	MECB02155	WIRING 1050	1,00
0043	VTVT00003	SCREW TE M 4X 12 ZC. UNI 5739	1,00
0044	897582	NUT M 4 TEF UNI 7473	1,00

ELECTRICAL COMPONENT GROUP - Continued

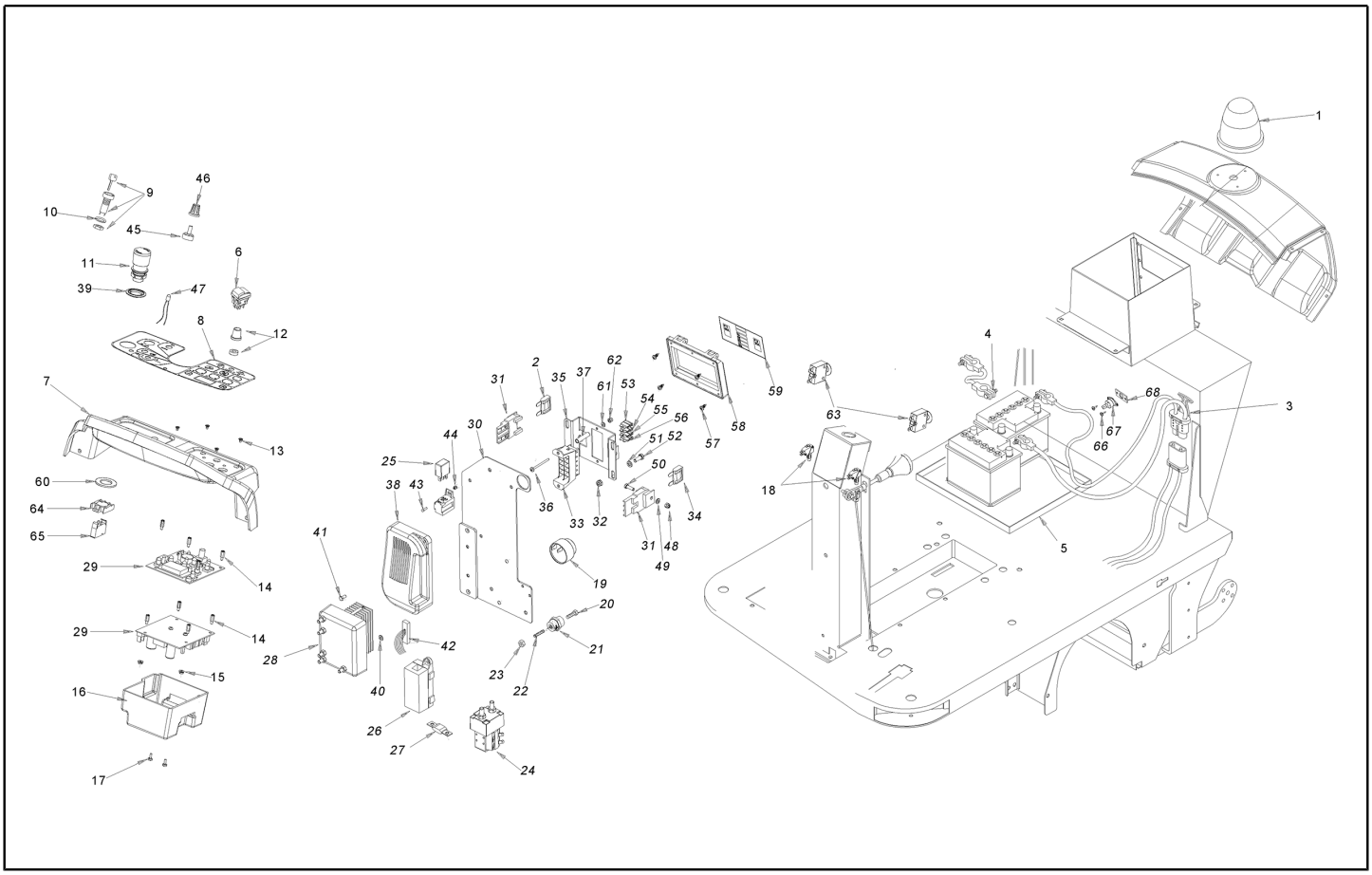

Ref.	Part No.	Description		Quantity
0045	KTRI05576	Speed limit potentiometer		1,00
0046	KTRI01935	KIT 1050-1202		1,00
0047	KTRI02054	KIT LED DIAGNOSTIC CURTIS		1,00
0048	VTDD00128	SELF-LOCJ.NUT M5		2,00
0049	VTRS00502	WASHER D. 5 0.466 UNI 6592		2,00
0050	VTVT14062	SCREW TE UNI 5739 5X16 ZB A.8.8		2,00
0051	VTRS00503	WASHER D. 6 UNI 6798		4,00
0052	VTVT01531	SCREW TE 6X 16 UNI 5739		4,00
0053	MEVR00584	FUSE 3A		1,00
0054	MEVR01428	FUSE 2A		1,00
0055	MEVR01132	FUSE 5A		1,00
0056	MEVR01316	MELT AWAY W FLAME		1,00
0057	VTVT48694	SCREW, TCB, TC, M5X12, UNI9707, TZ		4,00
0058	MEVR00232	FUSE, INSPECTION BOX		1,00
0059	ETET16484	LABEL 1050		1,00
0060	MPVR11693	WASHER Ø22,5X39,6X2,4 PA		1,00
0061	VTRS00501	WASHER D. 4 0.232 UNI 6592		2,00
0062	897582	NUT M 4 TEF UNI 7473		2,00
0063	METT00044	FUSE CIRCUIT BREAKER 10A		2,00
0064	MECI00583	SMALL BASKET -		1,00
0065	MECI00584	CONTACT -		1,00
0066	VTVT00039	SCREW TC UNI 6954 3.5X10 AUTOF.	02/03/2020	2,00
0067	METK00017	THERMAL SENSOR	02/03/2020	1,00
0068	GUGO00675	GASKET -	02/03/2020	1,00

BATTERIES AND CHARGER

Part No.	Description	
994203	BATTERY, 06VDC 0180AH [5H, GF06180], EMEA (sold separately)	4,00
BACA00273	CHARGER, BATTERY, 24VDC, 25A, EMEA	1,00
1248614	BATTERY, 12VDC 0150AH, CN (sold separately)	2,00
1212837	CHARGER, BATTERY, 24VDC, 13A, 100-240V, CN	1,00
1026330	CORD, POWER, CHARGER, 2.5M, CN	1.00